# Errata

**Title & Document Type:** 3585 Spectrum Analyzer Service Manual

**Manual Part Number:** 03585-90007

**Revision Date:** February 1989

---

## HP References in this Manual

This manual may contain references to HP or Hewlett-Packard. Please note that Hewlett-Packard's former test and measurement, semiconductor products and chemical analysis businesses are now part of Agilent Technologies. We have made no changes to this manual copy. The HP XXXX referred to in this document is now the Agilent XXXX. For example, model number HP8648A is now model number Agilent 8648A.

## About this Manual

We've added this manual to the Agilent website in an effort to help you support your product. This manual provides the best information we could find. It may be incomplete or contain dated information, and the scan quality may not be ideal. If we find a better copy in the future, we will add it to the Agilent website.

## Support for Your Product

Agilent no longer sells or supports this product. You will find any other available product information on the Agilent Test & Measurement website:

**www.tm.agilent.com**

Search for the model number of this product, and the resulting product page will guide you to any available information. Our service centers may be able to perform calibration if no repair parts are needed, but no other support from Agilent is available.

Agilent Technologies

HEWLETT PACKARD

# SERVICE MANUAL

# MODEL 3585 SPECTRUM ANALYZER

Serial Numbers: prefix 2824A and greater

**WARNING**

*To help minimize the possibility of electrical fire or shock hazards, do not expose this instrument to rain or excessive moisture.*

## VOLUME I

Manual Part No. 03585-90007
Microfiche Part No. 03585-90207


8600 Soper Hill Road
Everett, Washington 98205-1298 U.S.A.

Printed: February 1989

| Filename: /schematics/ega/3585a/c96568p2_d | | | D-03585-96568-1 |
|---|---|---|---|
| SYM | REVISIONS | APPROVED | DATE |
| A | AS ISSUED | B PRITCHARD | 12-19-89 |
| B | Q810 PART NUMBER WAS 1854-0237 (A1-9102901) | K JOHNSON | 2-27-91 |
| C | NO CHANGES, SEE SHEET 1 (A1-9201018) | [illegible] | [illegible] |

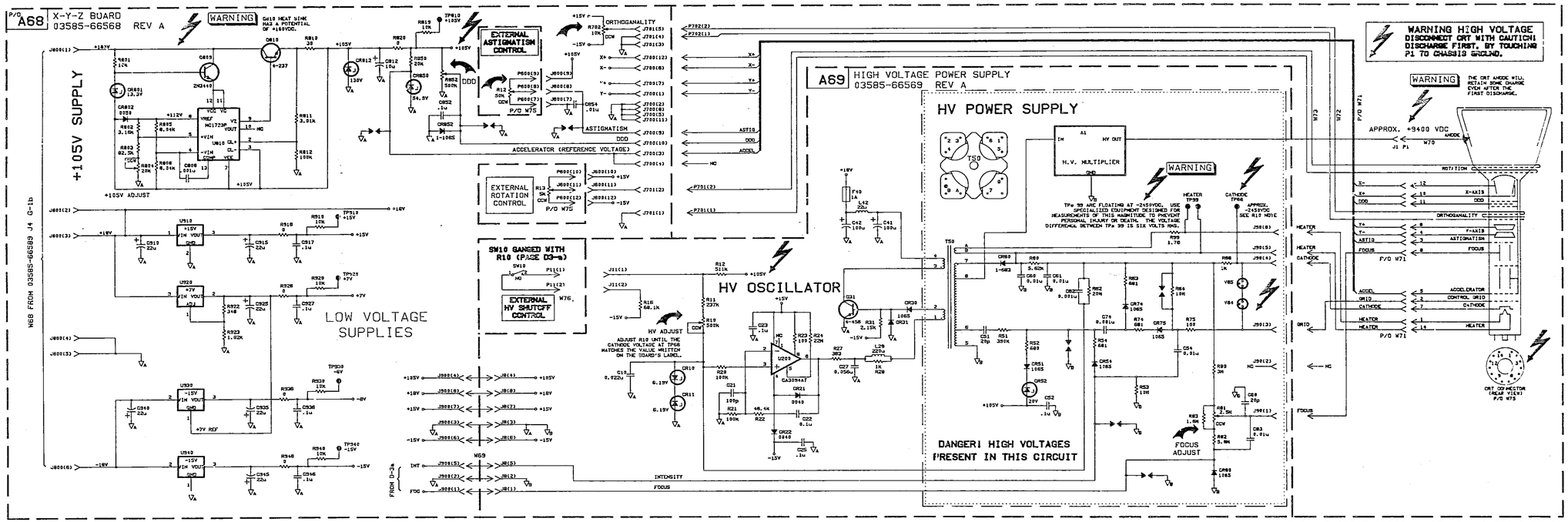


D-3b



DWG. D-03585-96568-1 REV C (SHEET 2 OF 2)

MISC. NOTES: (NOT FOR PUBLICATION)
A. INSTALL W101 ON 85-60 BOARD (ORANGE/GRAY TABS) TO TURN ON DOT GRATICULE.
B. THESE BOARDS REQUIRE THAT 85-68 REV A. (OR LATER) BE INSTALLED. (A PROPERLY MODIFIED REV. A BOARD WILL ALSO WORK.)
C. CIRCUITS DRIVING CRT ASTIG, Y+, FOCUS, AND ACCEL ALL REQUIRE ARC PROTECTION: ~2500V, <10 nSec.



| ITEM | QTY. | MATERIAL DESCRIPTION | MAT'L PART NO. | MAT'L DRWG NO. | MAT'L SPEC. |
|---|---|---|---|---|---|

| | | | |
|---|---|---|---|
| DRAWN BY: BILL PRITCHARD | DATE: 11-27-89 | PRINTED CIRCUIT BOARD - SCHEMATIC (X-Y-Z BOARD) | HEWLETT PACKARD |
| ENGINEER: BILL PRITCHARD | 11-27-89 | | |
| RELEASE TO PROD.: BRAD BEACHY | 12-14-89 | TITLE: (HIGH VOLTAGE POWER SUPPLY) | PART NUMBER: 03585-66568/69 |
| SUPERSEDES DWG. | | SCALE: NONE SHEET 2 OF 2 | D-03585-96568-1 |

| EGS/ESP Filename: /SCHEMATICS/3585A/b96568p1_d | D-03585-96568-1 | | |
|---|---|---|---|
| SYM | REVISIONS | APPROVED | DATE |
| A | AS ISSUED | B PRITCHARD | 12-19-89 |
| B | NO CHANGES, SEE SHEET 2 (A1-9102031) | K JOHNSON | 2-27-91 |
| C | R221 WAS 18.2k (A1-9201018) | [illegible] | [illegible] |

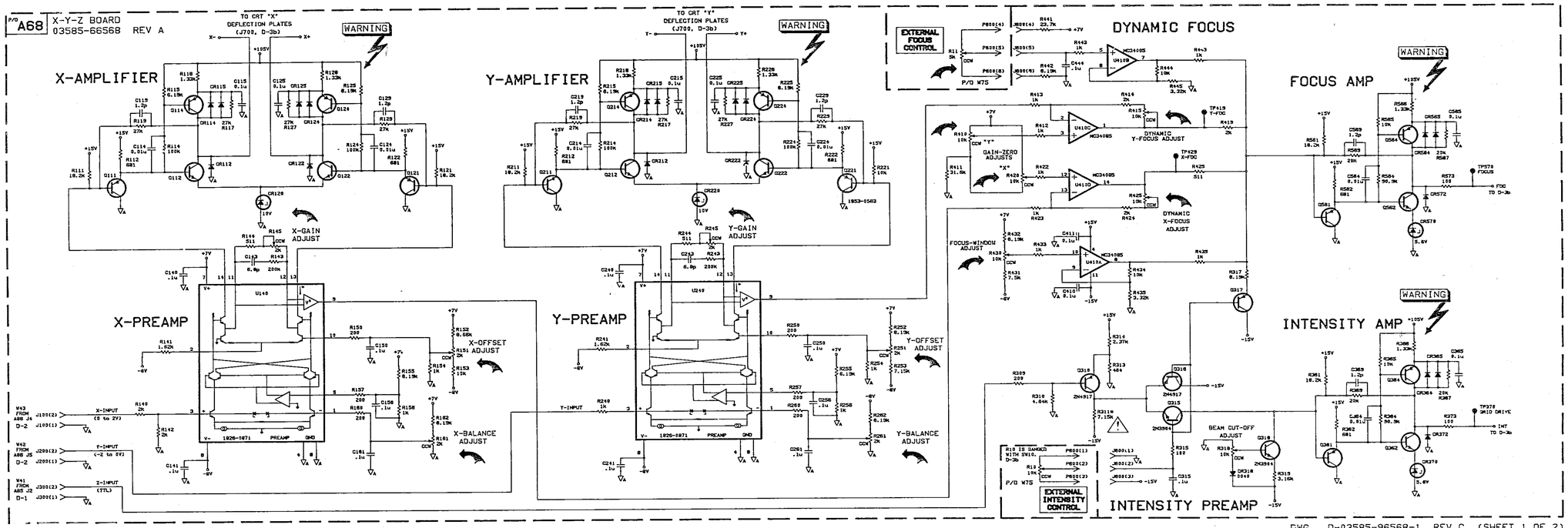




DWG. D-03585-96568-1 REV C (SHEET 1 OF 2)

**HP PROPRIETARY**

THIS DOCUMENT CONTAINS CONFIDENTIAL, PROPRIETARY INFORMATION THAT IS HEWLETT-PACKARD (HP) PROPERTY. DO NOT DISCLOSE TO OR DUPLICATE FOR OTHERS EXCEPT AS AUTHORIZED BY HP.

| ITEM | QTY. | MATERIAL DESCRIPTION | MAT'L PART NO. | MAT'L DRWG NO. | MAT'L SPEC. |
|---|---|---|---|---|---|

| | | | |
|---|---|---|---|
| BILL PRITCHARD (DRAWN BY) | 11-27-89 (DATE) | PRINTED CIRCUIT BOARD - SCHEMATIC (X-Y-Z BOARD) (TITLE) | HEWLETT PACKARD |
| BILL PRITCHARD (ENGINEER) | 12-15-89 | | 03585-66568/69 (PART NUMBER) |
| BRAD BEACHY (RELEASE TO PROD.) | 12-15-89 | | |
| SUPERSEDES DWG. | | SCALE NONE SHEET 1 OF 2 | D-03585-96568-1 |

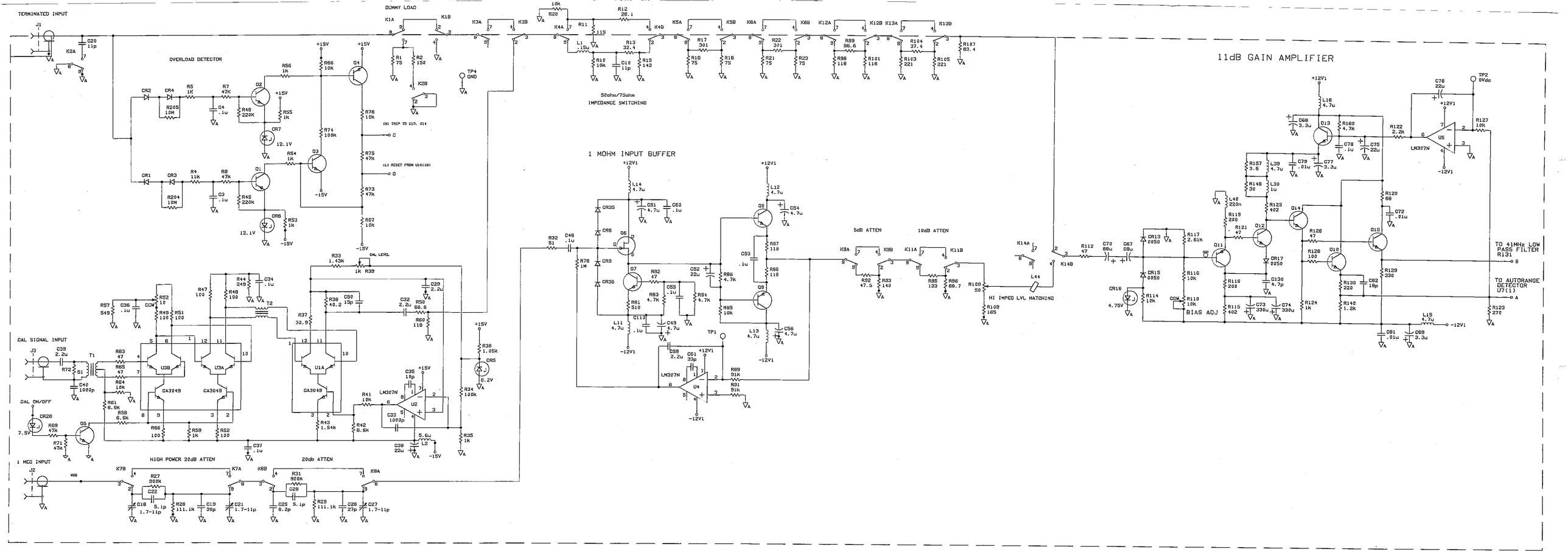
TERMINATED INPUT
DUMMY LOAD
OVERLOAD DETECTOR
50ohm/75ohm
IMPEDANCE SWITCHING
1 MOHM INPUT BUFFER
11dB GAIN AMPLIFIER
5dB ATTEN
10dB ATTEN
HI IMPED LVL MATCHING
BIAS ADJ
TO 41MHz LOW PASS FILTER R131
TO AUTORANGE DETECTOR U7(1)
CAL LEVEL
CAL SIGNAL INPUT
CAL ON/OFF
1 MEG INPUT
HIGH POWER 20dB ATTEN
20db ATTEN

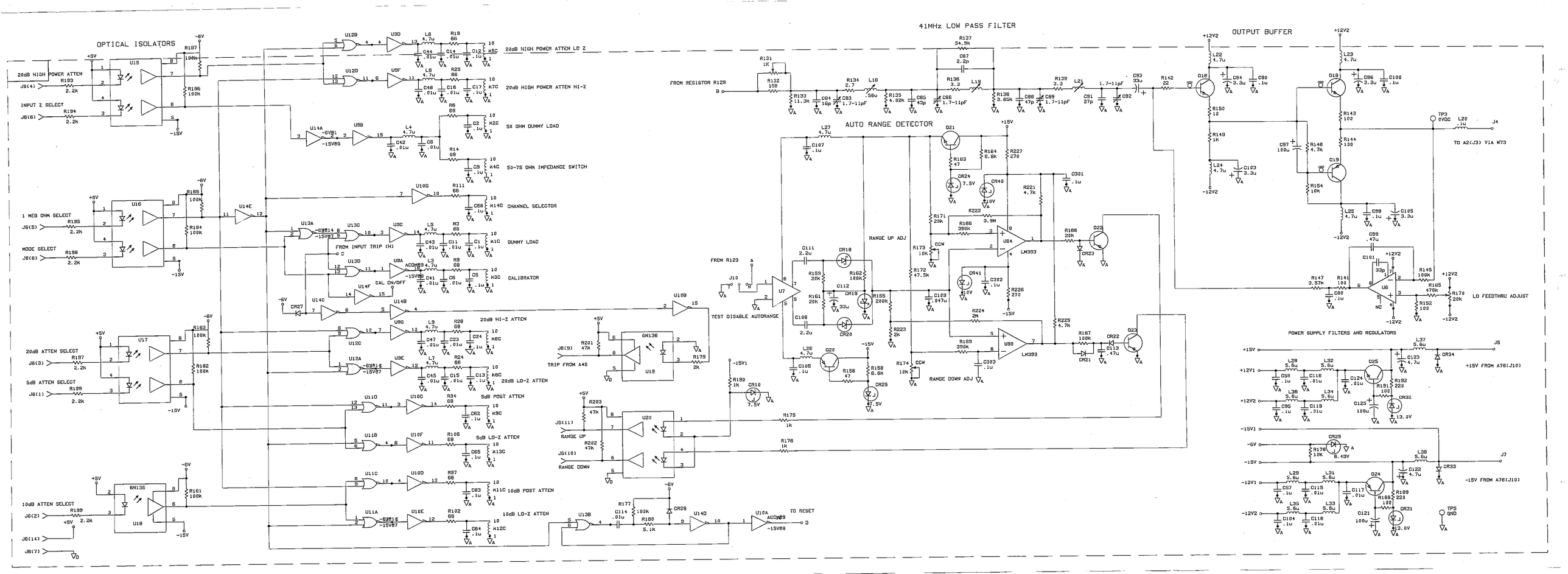
OPTICAL ISOLATORS
41MHz LOW PASS FILTER
OUTPUT BUFFER
AUTO RANGE DETECTOR
POWER SUPPLY FILTERS AND REGULATORS
20dB HIGH POWER ATTEN
INPUT Z SELECT
1 MEG OHM SELECT
MODE SELECT
20dB ATTEN SELECT
5dB ATTEN SELECT
10dB ATTEN SELECT
20dB HIGH POWER ATTEN LO Z
20dB HIGH POWER ATTEN HI-Z
50 OHM DUMMY LOAD
50-75 OHM IMPEDANCE SWITCH
CHANNEL SELECTOR
DUMMY LOAD
CALIBRATOR
CAL ON/OFF
FROM INPUT TRIP (H)
20dB HI-Z ATTEN
20dB LO-Z ATTEN
5dB POST ATTEN
5dB LO-Z ATTEN
10dB POST ATTEN
10dB LO-Z ATTEN
FROM RESISTOR R129
FROM R123
TEST DISABLE AUTORANGE
TRIP FROM A45
RANGE UP
RANGE DOWN
RANGE UP ADJ
RANGE DOWN ADJ
TO RESET
TO A2(J3) VIA W73
LO FEEDTHRU ADJUST
+15V FROM A76(J10)
-15V FROM A76(J10)

| Service Note # | Description Rev 11/10/87 | Wty | Date |
|---|---|---|---|
| 3585A-01 | INPUT/CONVERSION ASSEMBLY RUST PROBLEM<br>Ser# <1751A00230. Replace rusted parts with: Botton shield(03585-00306), front shield(03585 -00307), rear shield(03585-00308) and cover assembly(03585-60301). | WA | JAN 79 |
| 3585A-02B | A1 BOARD RELAY CHANGES: ALL SN<br>Describes a procedure for replacing relays A1K1 thru K9, K11-K14 on input assembly(66501) When 12vdc relays weren't available, 5vdc rel. with zener diodes in series were used. | WO | APR 82 |
| 3585A-03 | IMPROVEMENT OF 75 OHM INPUT RETURN LOSS<br>Ser# <1750A00570. If you have trouble meeting 75 ohm R-L spec, check to see if R10(2200ohm) (0683-2225) is in circuit. If not, install it. | WO | MAR 80 |
| 3585A-04 | CONVERSION OF BOARDS FROM A11-A13 TO A17-A19<br>Ser# <1750A00740. Boards A17-A19(03585-66517, 66518,66519) come without crystals(use crystal from old board you are replacing). Padding will be necessary to align the 3 bds together. | WN | OCT 80 |
| 3585A-05 | NEW REVISION: A51 REV.C BOARD: SN >1750A00716<br>The revision prevents the 100.35MHz IF from leaking into the input section and causing 3Hz noise floor problems. Improved drive circuitry to PHASE Det.(add Q4,5,8,9,L4,C36). | WO | FEB 81 |
| 3585A-06A | PRODUCT SUPPORT PACKAGE: ALL SN<br>The PSP(03585-69900) is designed to help facilitate on-site isolation & repair of 3585A repairs. Contains 17 PB boards, 7 extender cards, the processor, 2 cable assem & parts. | WN | SEP 81 |
| 3585A-07 | SERVICE KIT (03585-69800): ALL SN<br>Parts list and component location diagrams. | WN | SEP 81 |
| 3585A-08 | IMPROVED INTERMODULATION DISTORTION PERF.TEST<br>All SN. This mod reduces measurement uncertianty by increasing source isolation, allowing better resolution and accuracy. 20dB atten are placed in series with syn outputs. | WN | JAN 84 |
| 3585A-09 | ORDERING INFO: A41 CENTRAL PROCESSOR ASSEMBLY<br>All SN. Microprocessor IC(09825-67907), microprocessor gasket(5001-1861), A41 PC board without microprocessor(03585-69841), A41 PC with microprocessor(03585-66541). | WN | JAN 84 |

Model# 3585A

| Service Note # | Description Rev 11/10/87 | Wty | Date |
|---|---|---|---|
| 3585A-10 | INTERMITTENT CALIBRATION ERRORS 02, 04, 07 Ser# <2050A04740. Caused by the metal can of inductor A14L7 shorting to the A14 PC assembly (log amplifier). Place a fiber washer(3050-0082) on each of the 4 legs of A14L7). | WA | JAN 86 |
| 3585A-11 | MODIFICATION: OVERVOLTAGE PROTECTION CIRCUIT Ser# <2504A0440. As temperature of 3585A increases, trip level range for thyristers(A77-CR1/CR2) decreases, blowing line fuse. Change A77R2 to 29.4k(0698-4490). | WA | MAR 86 |
| 3585A-12 | "OSC UNLOCK" FOR RESOLUTION BW OF < 3KHz Ser# <2504A05459. This failure is due to an overdrive condition at the input of U2 on the A31 assembly, causing 35-65MHz VTO to unlock above 50MHz. Mod procedure explained. | WA | MAY 87 |

SERVICE NOTE

P.C. None

SUPERSEDES
NONE

-hp- MODEL 3585A

Serial Numbers Below 1750A00230

INPUT/CONVERSION ASSEMBLY RUST PROBLEM

The following metal shields in the Input/Conversion Assembly have a tendency to rust.

| -hp- Part No. | Description |
|---|---|
| 03585-00306 | Bottom Shield |
| 03585-00307 | Front Shield |
| 03585-00308 | Rear Shield |
| 03585-60301 | Cover Assembly |

If any of these parts rust, they will be replaced at no charge (Warranty Always) to the customer.

For instruments with serial numbers above 1750A00230, the rust problem has been corrected by coating the metal shields with an anti-rust compound.

THB/kkz/WA

1/79 09

Printed in U.S.A.



HEWLETT hp PACKARD

For more information, call your local HP Sales Office or East (201) 265-5000 • Midwest (312) 255-9800 • South (404) 434-4000
West (213) 877-1282. Or, write: Hewlett-Packard, 1501 Page Mill Road, Palo Alto, California 94304. In Europe, 1217 Meyrin-Geneva

SUPERSEDES
3585A-2A

# -hp- MODEL 3585A SPECTRUM ANALYZER

Serial Numbers: All

## A1 BOARD RELAY CHANGES

This service note will describe the replacement procedure for relays A1K1 through K9 and A1K11 through K14 on the 3585A input assembly 03585-66501. Should a relay fail in any 3585A, please refer to the appropriate section of this service note for the replacement procedure. The appropriate section of the service note may be determined by the serial number and by visual inspection of the A1 board as explained below.

The 3585A uses a 12 VDC relay for relays A1K1-K9, K11-K14 except when 12 VDC relays are not available from the vendor, in which case 5 VDC relays are used. In order to properly drive the 5 VDC relays a zener diode is placed in series with the relay coil. For 3585A's with serial numbers earlier then 1750A01611, and which use the 5 VDC relay an 8.25 volt zener diode is placed on the voltage side of the relay coil as shown in figure 1. For 3585A's with serial numbers later than 1750A01611, and which use the 5 VDC relays a 5.11 volt zener diode is placed on the ground side of the relay coil as shown in figure 2.

1. If the A1 board looks like figure 1, and the resistor positions A1R3, 6, 9, 14, 19, 24, 28, 94, 97, 102, 106, and 111 are loaded with 68 ohm resistors, refer to SECTION 1: 12 VDC RELAYS.

2. If the A1 board looks like figure 1, and the resistor positions A1R3, 6, 9, 14, 19, 24, 25, 28, 94, 97, 102, 106, and 111 are loaded with 8.25 volt zener diodes, refer to SECTION 2: 5 VDC RELAYS.

3. If the A1 Board looks like figure 2, and the diode positions A1CR60 through A1CR64 are loaded with 5.11 volt zener diodes, refer to SECTION 3: 5 VDC RELAYS.

4. If the A1 board looks like figure 2, and the diode positions A1CR60 through A1CR64 are loaded with 0 ohm resistors, refer to SECTION 4: 12 VDC RELAYS.

Please note these changes wherever necessary in your Operating and Service Manuals.

I/OF/WO 4-82/A1/BGP



Printed in U.S.A.

HEWLETT PACKARD

**FOR MORE INFORMATION, CALL YOUR LOCAL HP SALES OR SERVICE OFFICE** or East (201) 265-5000 • Midwest (312) 255-9800 • South (404) 955-1500 • West (213) 970-7500 or (415) 968-9200; **OR WRITE**, Hewlett-Packard, 1501 Page Mill Road, Palo Alto, California 94304. **IN EUROPE, CALL YOUR LOCAL HP SALES OR SERVICE OFFICE OR WRITE**, Hewlett-Packard S.A., 7, rue du Bois-du-Lan, P.O. Box CH-1217 MEYRIN 2 -Geneva, Switzerland. **IN JAPAN**, Yokogawa-Hewlett-Packard Ltd., 9-1, Takakura-cho, Hachioji-shi, Tokyo, Japan 192.

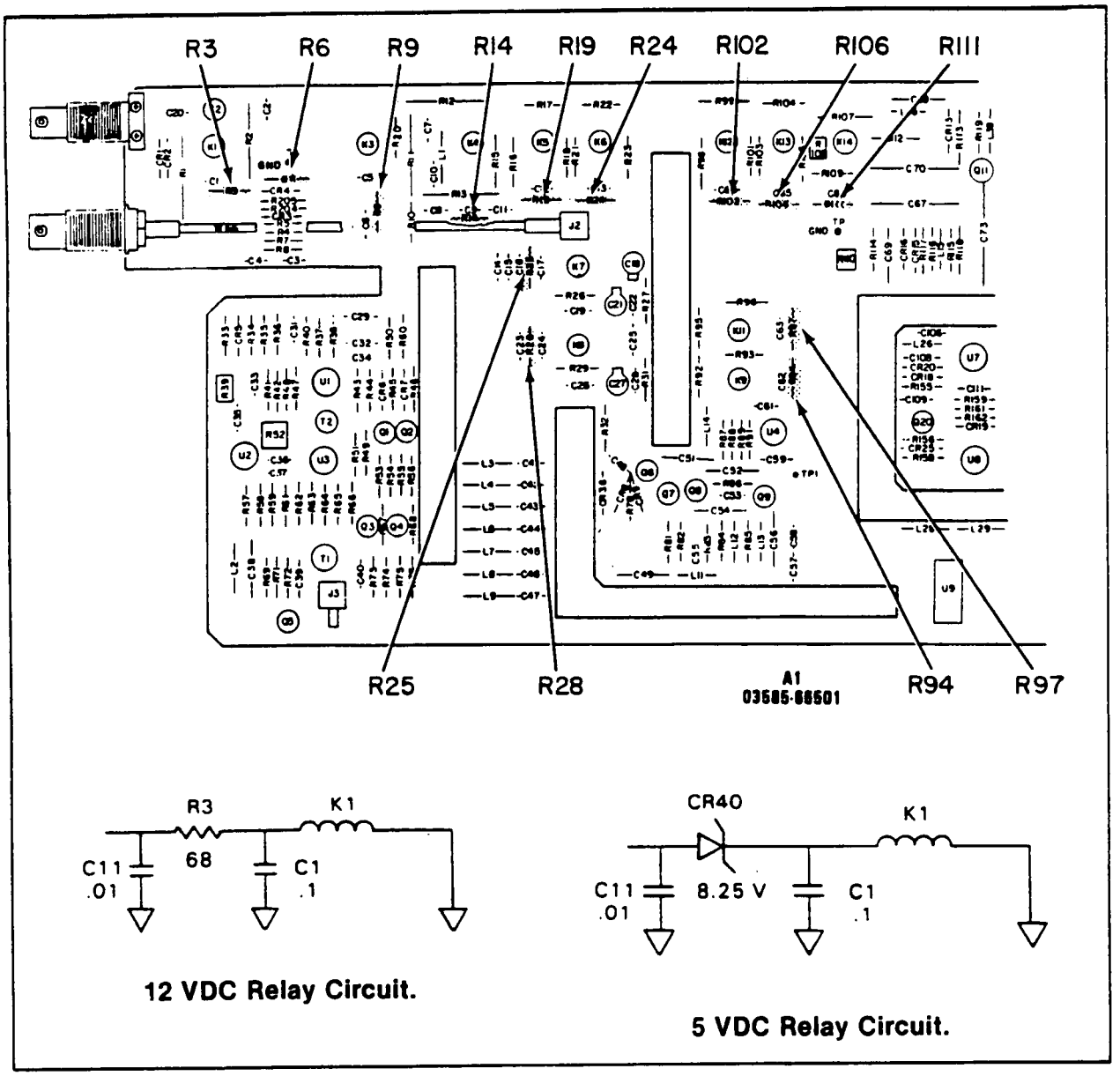


**Figure 1. A1 Board Serial Numbers 1750A01610 and Earlier.**

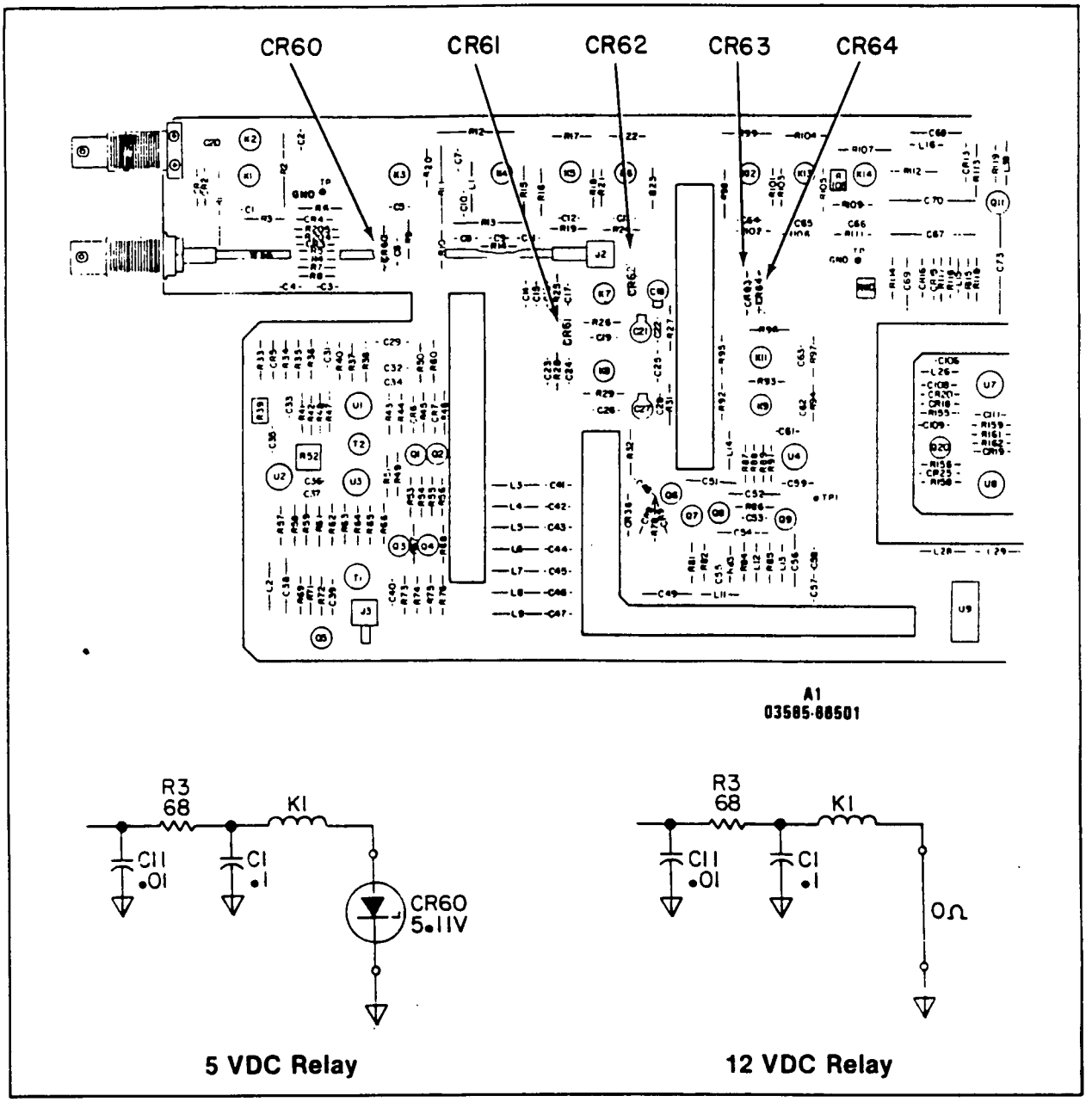


**Figure 2. A1 Board Serial Numbers 1750A01611 and Later.**

## SECTION 1: 12 VDC RELAYS.

Serial Numbers: 1750A01610 and earlier except 1750A00466 - 1750A00541 and 1750A00631 - 1750A00661

The relays on the A1 board of instruments with these serial numbers may be any of three part numbers: 0490-0508, 0490-1034, or 0490-1319. Regardless of the current part number, if the instrument has 12 VDC relays and fits into these serial numbers, please use the following guidelines to replace a failed relay.

1. Check the relay to see if the case is grounded as shown in figure 3.

2. If the failed relay **does not** have a ground pin, please replace the relay with a new relay part number 0490-1319, which is an ungrounded case relay.

3. If the failed relay **does** have a ground pin please, replace the relay with a new relay part number 0490-1318 which is a grounded case relay.

Before replacing a relay, verify that it is a 12 VDC relay by checking for the 68 ohm relay drive resistors as in figure 1.

**NOTE**

*If possible avoid interchanging grounded and ungrounded relays. This should be a last resort.*

When this procedure is followed you will not need to perform the return loss test. If for some reason part number 0490-1319 is unavailable, use an 0490-1318, or if part number 0490-1318 is unavailable, use an 0490-1319. If a grounded relay is replaced with an ungrounded relay, or an ungrounded relay with a grounded relay, the return loss test must be run and A1C7 may need to be changed to 10, 12, or 15pf for the instrument to meet the return loss specification.

**NOTE**

*All of the A1 boards are layed out for grounded relays so you must check the relay rather than the A1 board.*

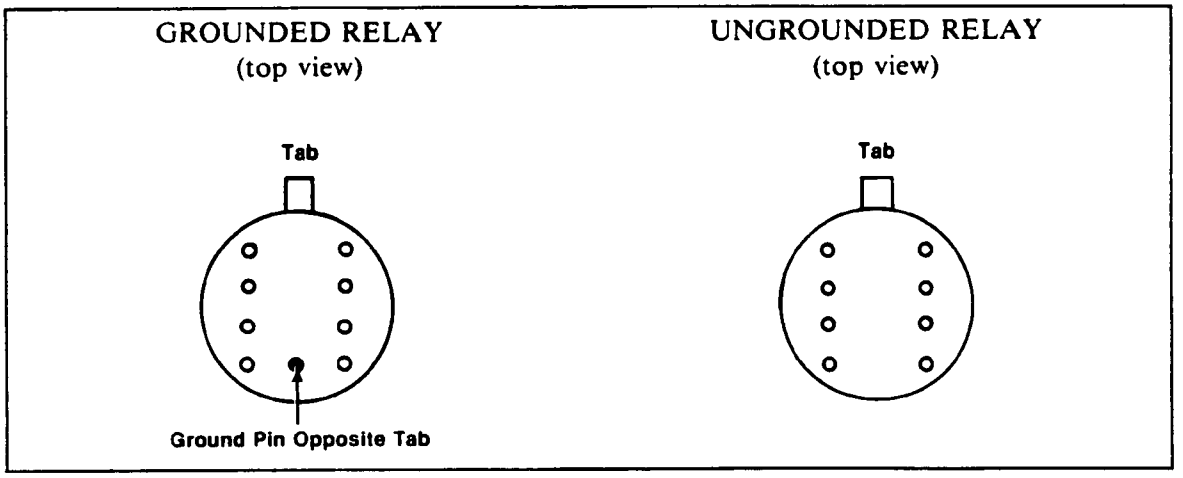


**Figure 3. Grounded and Ungrounded Relays.**

## SECTION 2: 5 VDC RELAYS

Serial Numbers: 1750A00466 through 1750A00540 and 1750A00631 through 1750A00661.

In 3585A's with the above serial numbers, the relays on the A1 board were changed from 12 VDC relays, part number 0490-0508, to 5 VDC relays, part number 0490-0670. Due to availability, the 5 VDC relays were substituted in placeof the 12 VDC relays. Along with the relays the following changes also occurred:

1. The relay drive resistors, A1R3, 6, 9, 14, 19, 24, 25, 28, 94, 97, 102, 106, and 111, were changed to 8.25 volt zener diodes, A1CR40 to CR53. See figure 1 to clarify this change.

2. To meet the return loss specification, A1C7 was changed from 10pf, part number 0160-2257, to 15pf, part number 0160-2261. This change was necessary because part number 0490-0508 is a grounded case relay, and part number 0490-0670 is an ungrounded case relay.

Should a 5 VDC relay fail, please replace it with a new 5 VDC relay by ordering part number 0490-0670.

Before replacing a relay, verify that it is a 5 VDC relay by checking for the zener diodes as shown in figure 1.

**NOTE**

*If possible avoid interchanging and mixing 5 VDC relays with 12 VDC relays.*

If for some reason part number 0490-0670 in unavailable, use the 12 VDC relay with an ungrounded case, part number 0490-1319. Order both the 12 VDC relay with an ungrounded case, part number 0490-1319, and the 68 ohm resistor, part number 0683-6805. Refer to figure 1 when replacing one of these relays. You will not need to change A1C7 when following these guidelines. Capacitor A1C7 should only be changed when grounded and ungrounded relays are interchanged.

## SECTION 3: 5 VDC RELAYS

Serial Numbers: 1750A01611 through 1750A01700

In 3585A's with the above serial numbers, the relays on the A1 board were changed from 12 VDC, part number 0490-1319, to 5 VDC relays, part number 0490-0670. Due to availability, the 5 VDC relays were substituted in place of the 12 VDC relays. Along with the relays the following changes also occurred:

1. To properly drive the 5 VDC relays, 5.1 volt zener diodes, A1CR60 through A1CR64, were added to the circuitry. The five zener diodes are arranged with the 13 relays as shown in figure 4. The 5 volt zener diodes are part number 1902-0579. See figure 2 to clarify this change.

Should a 5 VDC relay fail, please replace it with a new 5 VDC relay, part number 0490-0670.

Before replacing a relay, verify that it is a 5 VDC relay by checking for the zener diodes as in figure 2.

**NOTE**

*If possible avoid interchanging and mixing 5 VDC relays with 12 VDC relays. This should be a last resort.*

If for some reason the 5 VDC relays should be unavailable an ungrounded 12 VDC relay may be used to replace the failed 5 VDC relay. The 12 VDC relay to use is part number 0490-1319. The zener diode and all the other relays connected to that zener diode must also be replaced. The zener diode is replaced by a 0 ohm resistor, part number 8150-3375, and the other relays are replaced by the 12 VDC relay, part number 0490-1319.

For example, if relay A1K2 fails, and no 5 VDC relays are available, relays A1K2, A1K5, and A1K8 must all be replaced by the 12 VDC relays, and the zener diode A1CR61 must be replaced by a 0 ohm resistor.

When following these guidelines you will not have to change capacitor A1C7.

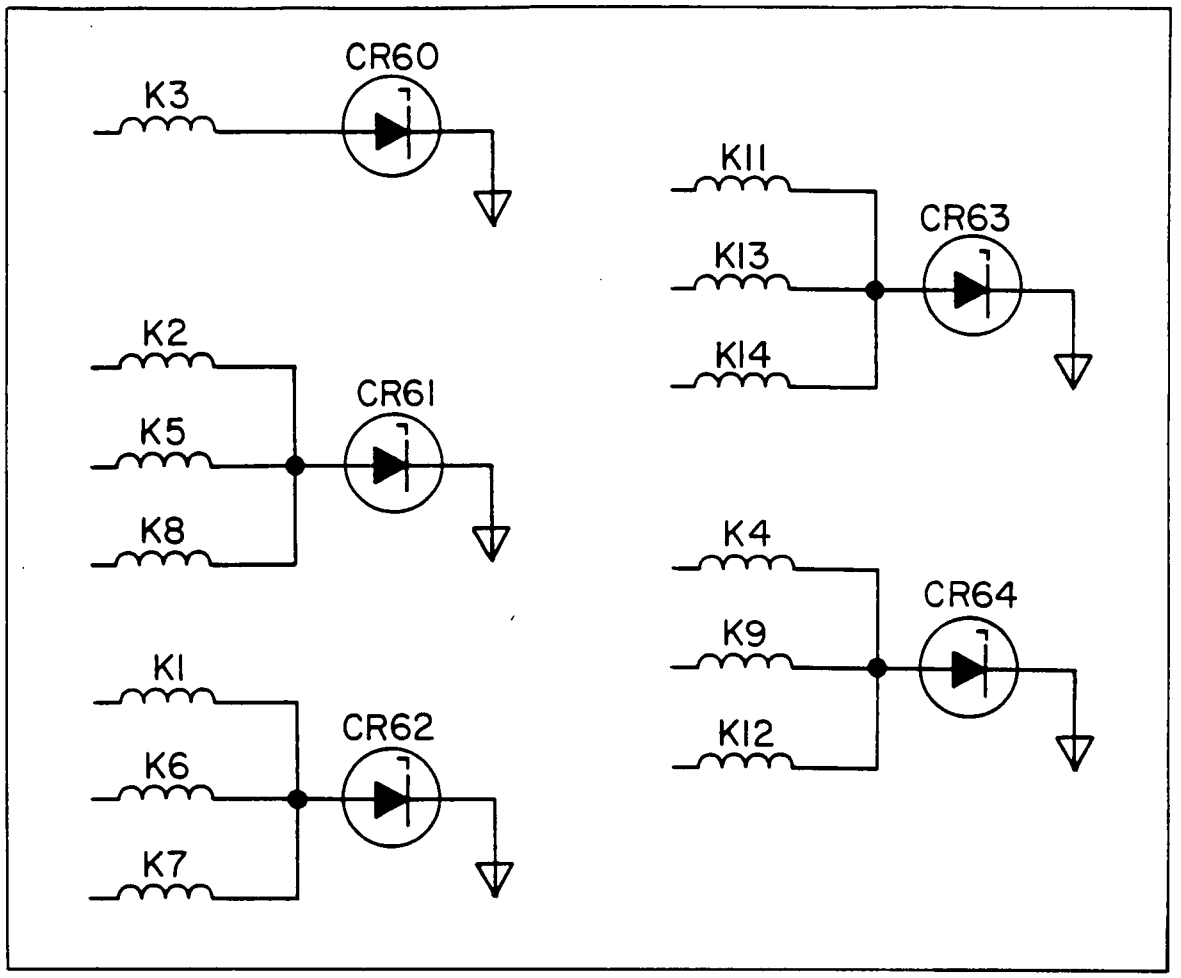


**Figure 4. Zener Diode and Relay Arrangement After Serial Number 1750A01610.**

## SECTION 4: 12 VDC RELAYS

Serial Numbers: 1750A01701 and later

The relays on the A1 board of instruments with these serial numbers may be either part number 0490-1318, or 0490-1319. These two relays may be identified by checking for the ground pin as shown in figure 5. Part number 0490-1318 is a grounded case relay, part number 0490-1319 is an ungrounded case relay. Use the following guidelines to replace a failed relay.

1. Check the relay to see if the case is grounded as shown in figure 5.

2. If the failed relay **does not** have a ground pin, please replace the relay with a new relay part number 0490-1319.

3. If the failed relay **does** have a ground pin, please replace the relay with a new relay part number 0490-1318.

Before replacing a relay verify that it is a 12 VDC relay by checking for the 0 ohm resistors as shown in figure 2.

**NOTE**

*If possible avoid interchanging grounded and ungrounded relays. This should be a last resort.*

When this procedure is followed you will not need to perform the return loss test. If for some reason part number 0490-1319 is unavailable, use an 0490-1318, or if part number 0490-1318 is unavailable, use an 0490-1319. If a grounded relay is replaced with an ungrounded relay or an ungrounded relay with a grounded relay, the return loss test must be run and A1C7 may need to be changed to 10, 12 or 15pf for the instrument to meet the return loss specification.

**NOTE**

*All of the A1 Boards are layed out for grounded relays so you must check the relay rather than the A1 board.*

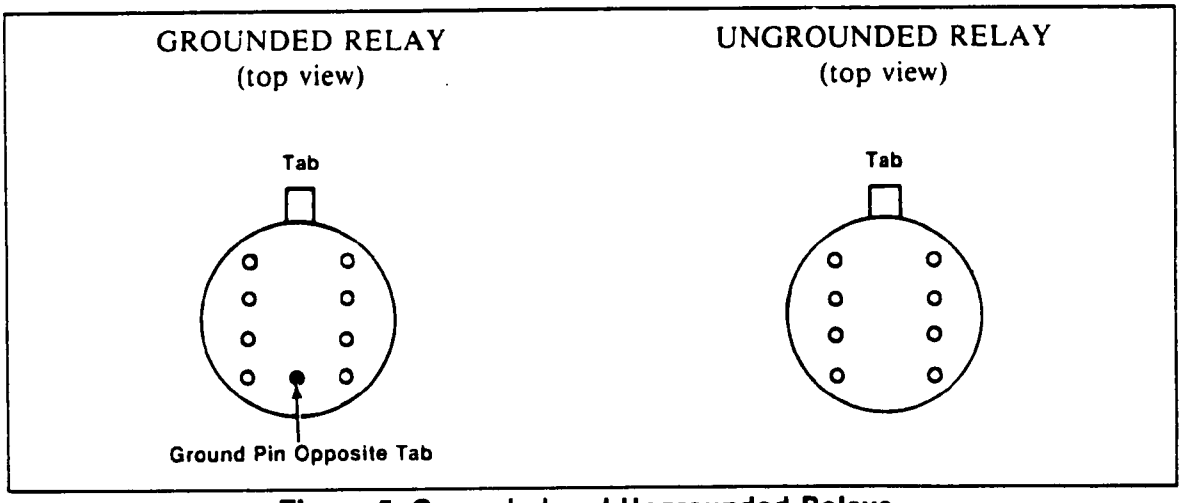


**Figure 5. Grounded and Ungrounded Relays.**

# SERVICE NOTE

P.C. 09-19371

SUPERSEDES
NONE

## -hp- MODEL 3585A SPECTRUM ANALYZER

Serial Number: 1750A00570 and Below

## 75 Ω INPUT RETURN LOSS IMPROVEMENT

A resistor can be added to the A1 board, 03585-66501, which will improve return loss characteristics for the 75 Ω input.

Although a location does exist on the A1 board for R10 (below and to the right of K3 on A1 component locator, Page 8-87), this resistor was previously only loaded if the factory technicians could not meet the 75 Ω return loss specification. This usually did not happen and therefore R10 was usually left off the board. Note that the circuit location of R10 is in parallel across C10 in the 50 Ω/75 Ω impedance switching network.

If you have trouble meeting the 75 Ω return loss specification, check to see if R10, 2200 Ω, Part Number 0683-2225, is in the circuit. If not, simply adding it in the location already provided will very likely cure the problem.

Please add this information to your 3585A Operating and Service Manual.

CEW/kkz/WO

03/80-09

Printed in U.S.A.

HEWLETT PACKARD

**FOR MORE INFORMATION, CALL YOUR LOCAL HP SALES OR SERVICE OFFICE** or East (201) 265-5000 • Midwest (312) 255-9800 • South (404) 955-1500 • West (213) 970-7500 or (415) 968-9200; **OR WRITE**, Hewlett-Packard, 1501 Page Mill Road, Palo Alto, California 94304. **IN EUROPE, CALL YOUR LOCAL HP SALES OR SERVICE OFFICE OR WRITE**, Hewlett-Packard S.A., 7, rue du Bois-du-Lan, P.O. Box CH-1217 MEYRIN 2 -Geneva, Switzerland. **IN JAPAN**, Yokogawa-Hewlett-Packard Ltd., 9-1, Takakura-cho, Hachioji-shi, Tokyo, Japan 192.

# SERVICE NOTE

P.C. 09-19513

SUPERSEDES
NONE

## -hp- MODEL 3585A SPECTRUM ANALYZER

Serial Number: 1750A00740 and Below

A11, A12 and A13 Conversion to A17, A18 and A19

The I.F. filter boards have been redesigned for ease of alignment resulting in new part numbers and reference designators for the old A11, A12 and A13 boards. This note outlines identification, service and compatibility between the boards.

| OLD | | NEW | |
|---|---|---|---|
| A11 | 03585-66511 | A17 | 03585-66517 |
| A12 | 03585-66512 | A18 | 03585-66518 |
| A13 | 03585-66513 | A19 | 03585-66519 |
| Top Shield | 03585-04102 | Top Shield | 03585-04116 |

**Figure 1. Old and New Part Numbers for IF Boards.**

The new boards, A17, A18 and A19 should be identified by part number as shown in the table above. Do not rely on the pc board guide colors since the A17, 18 and 19 boards may be used with older 3585's which originally contained the A11, 12 and 13 boards.

Should a 3585 with serial number prior to 1750A00740 require replacement of an A11, 12 or 13 board procede to order its corresponding new replacement, A17, 18 or 19. Note that the new board will come without a crystal. Remove the crystal from the old board and insert is in the new board. Padding will be necessary to align the 3 boards together. Also note that the new I.F. board alignment pots will not match the old top shield making alignment slightly more difficult. If desired a new top shield may also be ordered as shown in Figure 1 Schematics and parts locators for both boards may be found in the service manual.

MGA/dlh/WN

10/80-09

Printed in U.S.A.

HEWLETT PACKARD

**FOR MORE INFORMATION, CALL YOUR LOCAL HP SALES OR SERVICE OFFICE** or East (201) 265-5000 • Midwest (312) 255-9800 • South (404) 955-1500 • West (213) 970-7500 or (415) 968-9200;**OR WRITE,** Hewlett-Packard, 1501 Page Mill Road, Palo Alto, California 94304. **IN EUROPE, CALL YOUR LOCAL HP SALES OR SERVICE OFFICE OR WRITE,** Hewlett-Packard S.A., 7, rue du Bois-du-Lan, P.O. Box CH-1217 MEYRIN 2 -Geneva, Switzerland. **IN JAPAN,** Yokogawa-Hewlett-Packard Ltd., 9-1, Takakura-cho, Hachioji-shi, Tokyo, Japan 192.

SUPERSEDES
NONE

# -hp- MODEL 3585A SPECTRUM ANALYZER

Serial Numbers: 1750A00716 and above.

## NEW REVISION A51 BOARD

A new revision A51 Board is now being used. A51 REV C has several modifications for improved performance.

The new revision prevents the 100.35MHz IF from leaking into the input section and causing 3Hz noise floor problems. The drive circuitry to the phase detector is improved with the addition of Q4, Q5, Q8, Q9, and L4 and C36 in the 10.35MHz oscillator. The new oscillator layout also requires a value change for L2, L3, and R12 and a 6V supply for R12. The power supply has improved bypass circuitry.

The revised schematic and parts locator are attached.

I/IM/WO

2/81-09/WJL

Printed in U.S.A.



HEWLETT PACKARD

**FOR MORE INFORMATION, CALL YOUR LOCAL HP SALES OR SERVICE OFFICE** or East (201) 265-5000 • Midwest (312) 255-9800 • South (404) 955-1500 • West (213) 970-7500 or (415) 968-9200; **OR WRITE**, Hewlett-Packard, 1501 Page Mill Road, Palo Alto, California 94304. **IN EUROPE, CALL YOUR LOCAL HP SALES OR SERVICE OFFICE OR WRITE**, Hewlett-Packard S.A., 7, rue du Bois-du-Lan, P.O. Box CH-1217 MEYRIN 2 -Geneva, Switzerland. **IN JAPAN**, Yokogawa-Hewlett-Packard Ltd., 9-1, Takakura-cho, Hachioji-shi, Tokyo, Japan 192.

SUPERSEDES
3585A-6

03585 69900

-hp- PART NUMBER 03585-69900

# PRODUCT SUPPORT PACKAGE FOR 3585A SPECTRUM ANALYZER

Serial Numbers: All

## I. Introduction

The 03585-69900 is a field Product Support Package (PSP) designed to help facilitate on-site isolation and repair of failures in the -hp- Model 3585A Spectrum Analyzer.The PSP contains seventeen PC assemblies, seven extender cards, the processor, two cable assemblies and components with high failure rates as the diagnostic aids.

## II. PSP Application

A. **PC Boards.** Because board functions in the 3585A are so interrelated (e.g. the L.O. loop cannot be broken effectively), one of a technician's most powerful troubleshooting aids is a set of selected PC boards. Depending on the malfunction, one or two boards will be suspect. This suspicion can be confirmed by substituting in a known-good board.

B. **High Failure Rate Components.** Once the problem is isolated to the board level, the high failure rate parts can be used to isolate the problem to the component level when one of the provided parts is suspected. This quick isolation process should improve turn-around-time by eliminating the possibility of waiting for parts that are actually good.

**NOTE**

*Boards and components in the package are for use as diagnostic aids only and are not to be used as replacement parts.*



Printed in U.S.A.

## III. Troubleshooting With The PSP

A. **Introduction.** It is strongly recommended that a few steps be taken to narrow down the possible causes of a malfunction before starting to substitute boards. First, you should determine if an actual malfunction exists. See the Appendix for a quick front panel verification test.

B. **Localizing the Problem.**

**CAUTION**

*Always turn off the instrument before removing or replacing any PC board, unless you are told otherwise.*

3585A malfunctions can be divided into six basic groups:

1. Power Supplies
2. CRT Display
3. Digital/Processor
4. IF Filter/Log Amp
5. Local Oscillator/Tracking Generator
6. Input/Conversion

C. **Power Supplies (Group 1).** Power supply problems can usually be identified by observing the LED's on the power supply boards. A lighted green LED indicates correct operation. A lighted yellow LED indicates "current limit." It is a good idea to check the power supply LED's first whenever a malfunction exists.

D. **CRT Display (Group 2).** For an improper display, the display circuits (A63, 64, 65, 67) can be checked by moving the test jumper (A63,J3) to "T." The display should be the test pattern of Figure 1.

If there is no display at all, remove the two cables connected to A64,J5 and J6 and then short across the two pins in each of the cables (i.e., short the high and low leads of A67, $X_{in}$ together and the high and low leads of A67, $Y_{in}$ together). Disconnect A63,J5 and either apply +5 V to the clear lead of the disconnected cable or place A67,J11 in the test position. Check for a dot in the upper left hand corner of the display (you may need to turn up the intensity to locate the dot). If the dot is present, A67, 65 and the CRT are probably OK, and A61, A63, 64 are the prime suspects.

If the test pattern is correct, display errors are probably being caused by the A63 board, the Digital/Processor boards (A41, 42, 43, 45) or the peripheral boards.

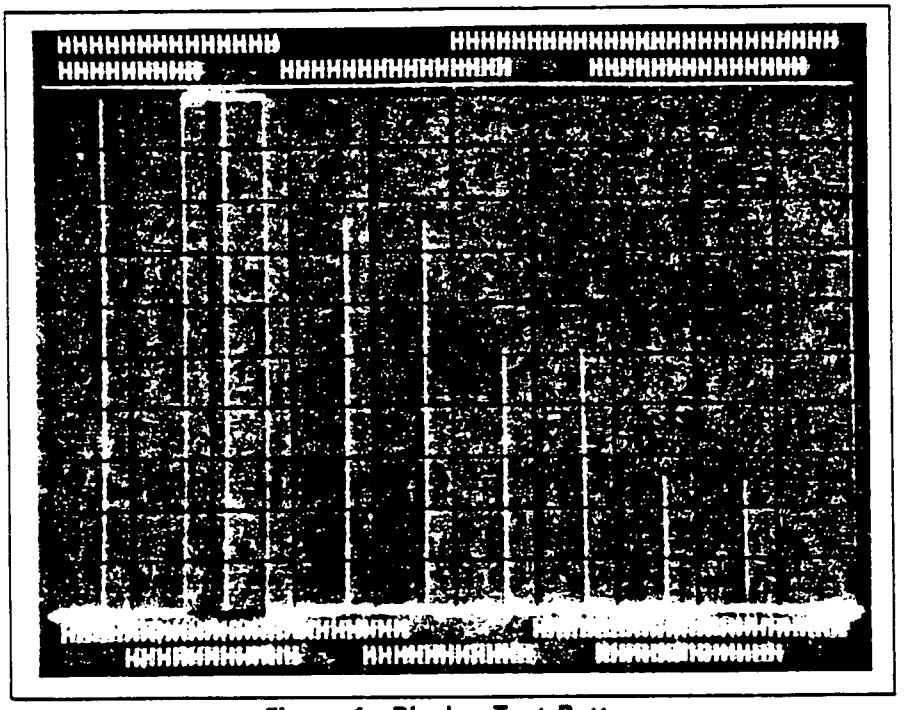

**Figure 1. Display Test Pattern.**

E. **Digital/Processor (Group 3).** The digital section is easily checked by verifying that the front-panel keys can be activated. To do this, press several front-panel keys and verify that the appropriate alpha-numberics are intensified on the display and/or the keys are lighted. If the keys cannot be activated, one of the digital boards (A41, 42, 43, 45) or one of the peripheral boards is in error. In general, a non-running processor is not caused by a bad processor but by a bad peripheral board, or a bad clock board (A61).

The problem can be isolated to the digital boards by using the self-test diagnostics. A good diagnostic to start with is Diag. # 7 (Test # 14). Once the problem is isolated to the digital section, the A42 board becomes the prime suspect.

F. **IF Filter/Log Amp (Group 4).** To isolate a main signal path (30 kHz BW) amplitude problem to the IF Filter/Log Amp section, apply a -2.5 dBm, 350 kHz signal, terminated in 50 ohms, from the 3335A to the input of the A11 board (A17,J1). With the reference level equal to the range, the signal on the CRT should be close to full scale if the IF/Log Amp section is functioning properly.

After isolating the amplitude problem to the IF Filter/Log Amp section, the IF Filter section can be separated from the Log Amp section by reconnecting A17,J1 to A6D,J1, applying a full scale signal (reference level = range = signal) to the 3585A 50 ohm input, and then checking for 240 ± 20 mVrms at A14,TP5. If A14,TP5 is not 240 ± 20 mVrms, the IF Filter section (A17,18,19 and the first part of A14) is malfunctioning.

G. **Local Oscillator (Group 5).** If the Local Oscillator is unlocked, one or more of the four L.O. LED's will be incorrect. If an unlock condition exists, use the truth table in the manual to determine which boards should be substituted.

The L.O. may be incorrect even when the LED unlock condition is not present. To insure that the L.O. is correct, check the first L.O. (A22,J1) for > -2 dBm and the correct frequency, the second L.O. (A50,J1) for + 15 ± 2 dBm and a 90 MHz frequency, and the third L.O. (A50,J2)for + 18 ± 2 dBm and a 10 MHz frequency. Check the amplitudes with a Sealectro to BNC cable or a 1:1 probe connected to 8558A or comparable spectrum analyzer.

After verifying the L.O., connect the Tracking Generator output to the 50 ohm input, and check the Tracking Generator output flatness over the entire 40 MHz frequency span. To check the frequency accuracy of the Tracking Generator, select a "manual" frequency of 20 MHz and use a frequency counter locked to the 3585A to verify that the Tracking Generator output is equal to 20 MHz ± 1 Hz + time base error of frequency counter.

H. **Input/Conversion (Group 6).** Because the Input/Conversion section is very difficult to access and has many adjustments, do not substitute boards in the Input/Conversion section unless you are certain the problem is located in that section. The easiest way to isolate a main signal path problem to the Input/Conversion section is by following the isolation procedures for groups one through five. If these isolation procedures indicate that groups one through five are functioning properly, the Input/Conversion section is the most likely suspect.

To separate the Input section (A1) from the conversion section (A2 - A6), apply a full scale signal (range = signal = reference level; usually a -25 dBm signal) to the input of the 3585A, and check for .25 V p-p ± .03 V at A1, TP3 with a 1 M ohm, 1:1 probe connected to an oscilloscope.

## IV. PSP Parts List

**Table 1. Parts List.**

| Qty | Reference Designator | -hp- Part No. | Description |
|---|---|---|---|
| 1 | A3 | 03585-66503 | PC Assy - 100.35 MHz IF Filter |
| 1 | A4 | 03585-66504 | PC Assy - 2nd Mixer |
| 1 | A5 | 03585-66505 | PC Assy - 3rd Mixer |
| 1 | A22 | 03585-66522 | PC Assy - First L.O. VCO |
| 1 | A23 | 03585-66523 | PC Assy - Step Synthesis VTO |
| 1 | A25 | 03585-66525 | PC Assy - Summation Loop Mixer |
| 1 | A26 | 03585-66526 | PC Assy - Step Phase Detector |
| 1 | A27 | 03585-66527 | PC Assy - First L.O. VCO Control |
| 1 | A28 | 03585-66528 | PC Assy - SUM Loop Phase Detector |
| 1 | A31 | 03585-66531 | PC Assy - VTO Regulator |
| 1 | A32 | 03585-66532 | PC Assy - Analog |
| 1 | A33 | 03585-66533 | PC Assy - Divide by N Counter |
| 1 | A34 | 03585-66534 | PC Assy - Interface Regulator |
| 1 | A65 | 03585-64201 | PC Assy - High Voltage Assy |
| 1 | A67 | 03585-66567 | PC Assy - XYZ Board |
| 1 | A63 | 03585-66563 | PC Assy - Display Logic |
| 1 | A2 | 03585-66502 | PC Assy - First Mixer |
| 5 | | 03585-61601 | Cable Assy Extender |
| 1 | | 03585-61616 | Cable Assy Adapter |
| 1 | | 03585-66590 | PC Extender - 36 Pin |
| 1 | | 03585-66591 | PC Extender - 43 Pin |
| 1 | | 03585-66592 | PC Extender - 18 Pin |
| 1 | | 03585-66593 | PC Extender - 10 Pin |
| 1 | | 03585-66594 | PC Extender - 6 Pin |
| 1 | | 03585-66595 | PC Extender - 15 Pin |

## Table 1. Parts List (Cont'd)

| Qty | Reference Designator | -hp- Part No. | Description |
|---|---|---|---|
| 1 | | 03585-66596 | PC Extender - 15 Pin |
| 3 | | 1250-0669 | Adapter J-J |
| 1 | A13U10 | 1820-1971 | Analog Switch IC-DG201CJ |
| 1 | A14U5 | 1813-0017 | Log AMP |
| 1 | A16U6 | 1820-1984 | D/A CONV IC |
| 1 | A16U8 | 1820-1978 | D/A CONV IC |
| 1 | A33U19 | 1820-2004 | FRAC N Control IC |
| 1 | A41U13 | 09825-67907 | Microprocessor |
| 1 | A41U13 | 5001-1861 | CONN - GSKT ASSY |
| 1 | A42U1-6, 10-14, 21-25 | 1818-0156 | RAM IC |
| 1 | A44U16 | 1820-1691 | NANOPROCESSOR |
| 2 | A1K1-9, 11-14 | 0490-1318 | Relay 2C 12VDC |
| 1 | A1U9, 10 | 1858-0047 | IC Driver |
| 1 | A1U18, 19 | 1990-0444 | OPTO Isolators |
| 2 | A1U15-17, 20 | 1990-0577 | OPTO Isolators |
| 1 | A71U1 | 1813-0110 | PWR IC |
| 1 | A71CR3<br>A72CR3<br>A7CR3<br>A74CR3 | 1990-0598 | LED Lamp Green |
| 1 | A1U1, U3<br>A52U4<br>A51U10 | 1858-0004 | Dual DIF AMP CA3049 |
| 1 | A5U1 | 1826-0062 | IC - Mixer Circuit |
| 1 | A64U5, U7, U8 | 1826-0188 | Counter MC1407L-8 |
| 1 | A51U2, U4<br>A25U1<br>A26U11 or X1 | 0955-0087 | DBL BAL Mixer |
| 1 | A26U2, U3 | 1820-2093 | IC 10010 PC |
| 1 | A21Y1 | 0410-1141 | XTAL 89.99 MHz |
| 1 | A21CR2 | 0122-0072 | Diode BB105 |
| 1 | A51X1 | 0410-1137 | XTAL 10.340 MHz |
| 2 | A51CR1, CR2<br>A53CR5<br>A22CR1, CR2<br>A23CR1, CR2<br>A31CR1, CR2 | 0122-0089 | Diode MV109 |
| 2 | A11U2-U6<br>A12U1, U3-U6<br>U10, U11<br>A13U6-9<br>A15U13 | 1826-0846 | Quad Analog Switch |
| 2 | A71CR5<br>A72CR6<br>A73CR5<br>A74CR1 | 1990-0597 | LED Lamp Yellow/Front Panel Lamp |
| 1 | A72U5 | 1813-0082 | SW-REG PIC-646 |
| 1 | A73U1 | 1813-0083 | SW-REG PIC-601 |
| 1 | A74U5 | 1813-0084 | SW-REG PIC-611 |
| 1 | A45CR1<br>A44CR2<br>A34DS1-4 | 1990-0486 | LED Red |
| 1 | A63U21 | 1820-1692 | NANOPROCESSOR |
| 1 | | 03585-64501 | Carrying Case Assembly |

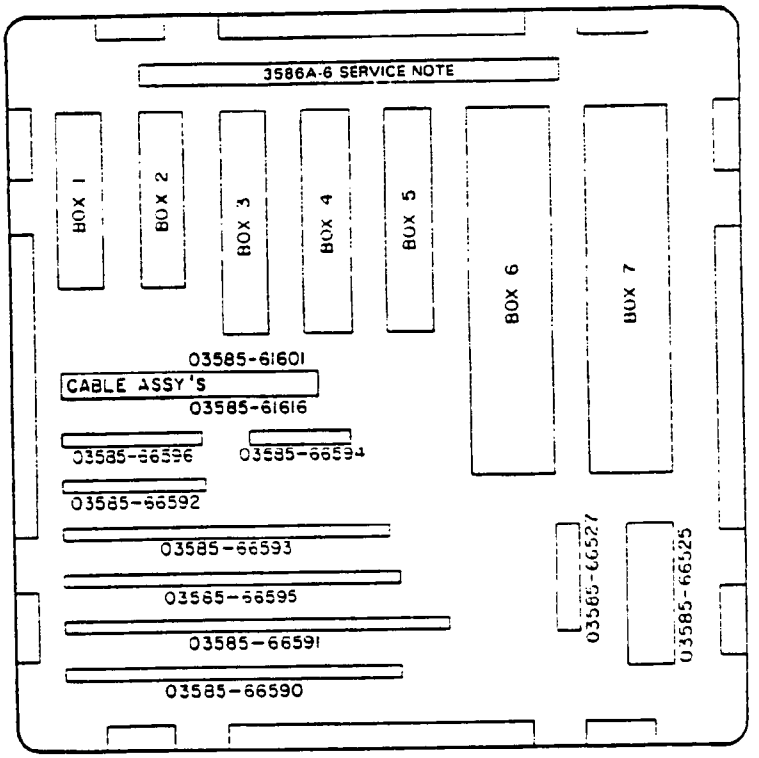


Carrying Case #1

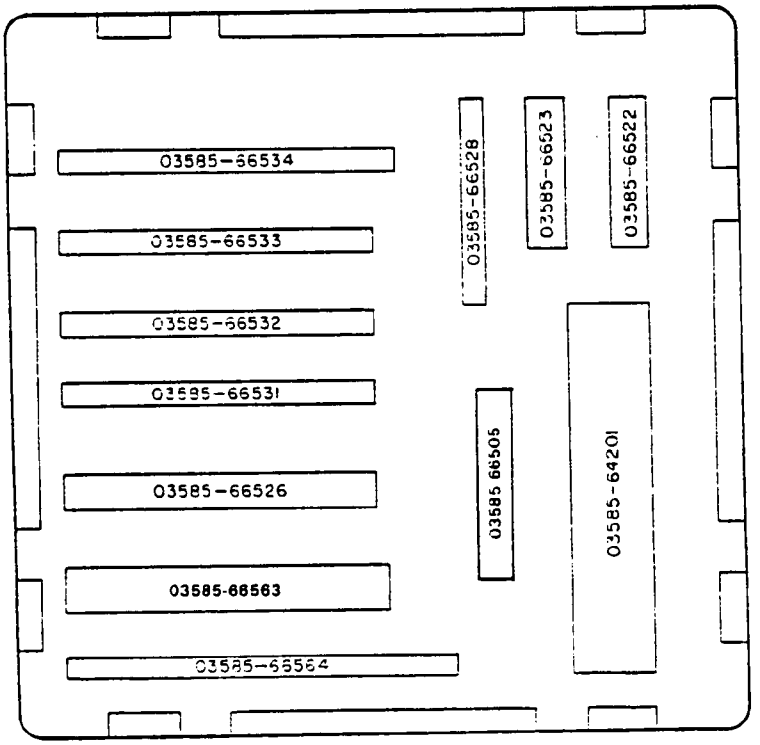


Carrying Case #2

**Figure 2. PSP Layout**

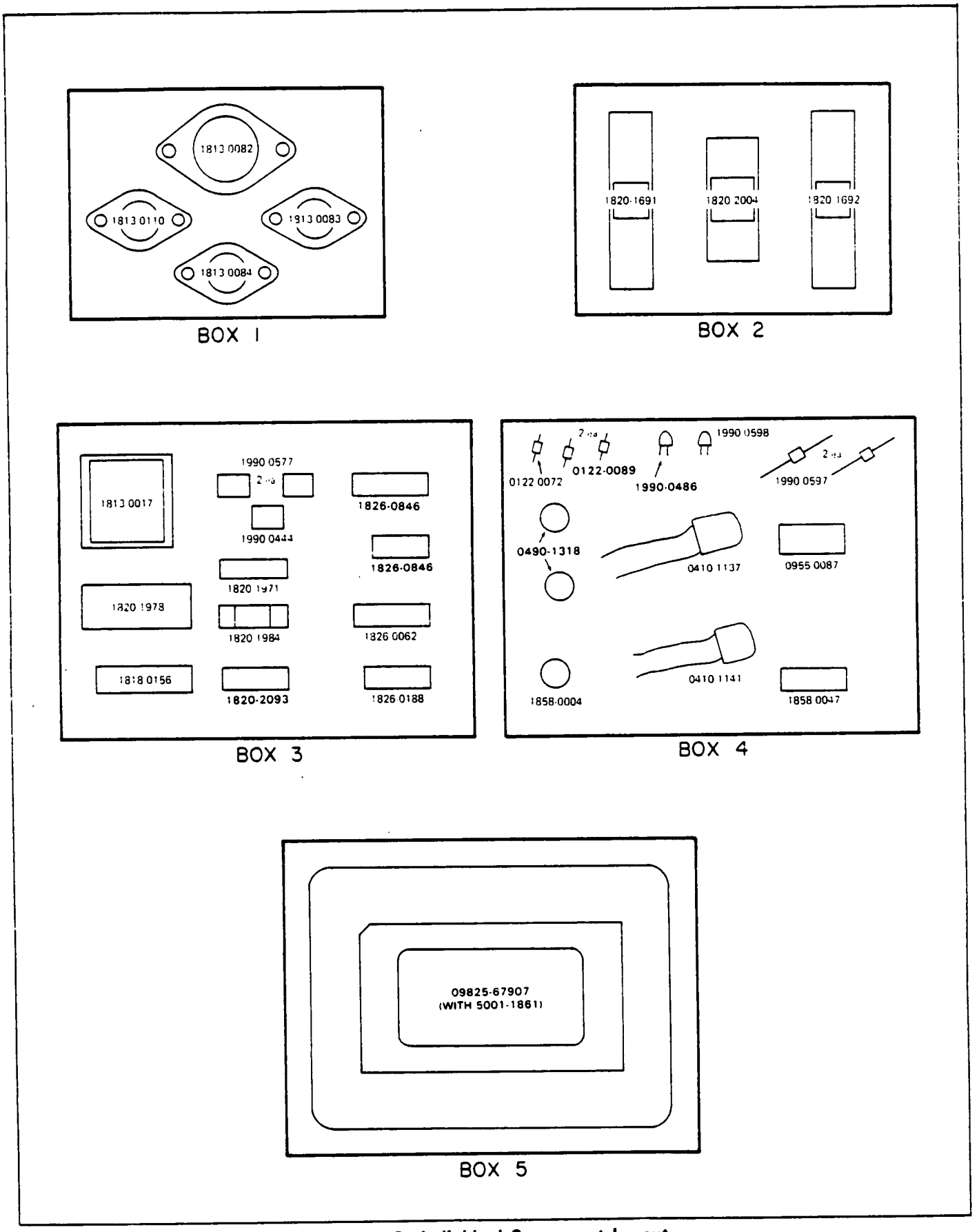


**Figure 3. Individual Component Layout**

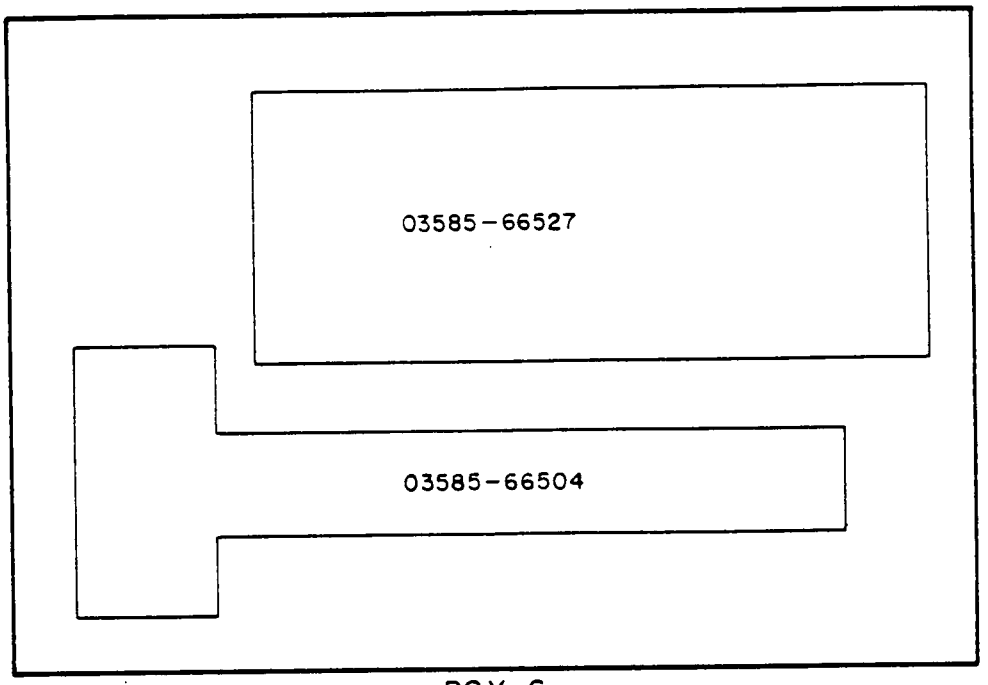


BOX 6

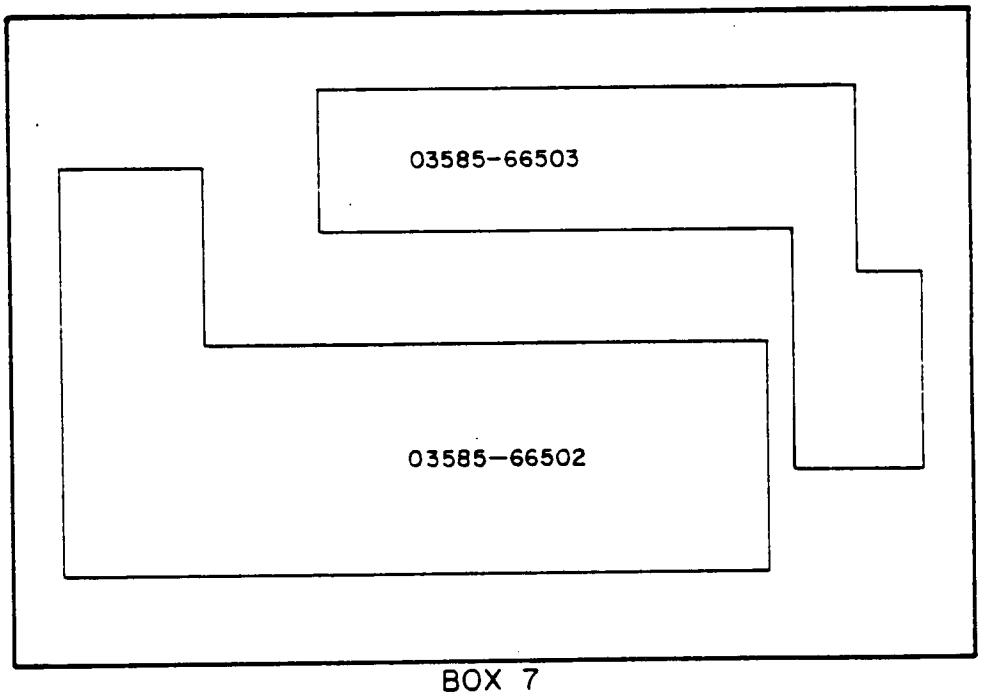


BOX 7

**Figure 3. Individual Component Layout (Cont'd)**

## V. Field Service Inventory

### Table 2. FSI Recommendation.

| Qty | -hp- Part No. | Description |
|---|---|---|
| 2 | 0490-1318 | Relay 2C 12VDC |
| 1 | 1813-0110 | PWR IC |
| 1 | 1813-0082 | SW-REG PIC 646 |
| 2 | 1813-0083 | SW-REG PIC 601 |
| 2 | 1813-0084 | SW-REG PIC 611 |
| 1 | 1826-0511 | +15 V Reg |
| 1 | 1826-0512 | -15 V Reg |
| 1 | 1855-0269 | XSTR-SD214 |
| 1 | 1858-0015 | XSTR ARRAY SPEC |
| 1 | 1902-0643 | DIO-ZNR IN2979B |
| 1 | 1902-0909 | DIO-ZNR 8.2 V.10 |
| 1 | 1902-1198 | DIO-ZNR IN2973B |
| 1 | 1902-1204 | DIO-ZNR 20 V .05 |
| 1 | 1902-1217 | DIO-ZNR 6.2V .05 |

## Appendix

### 3585A Front Panel Verification Test.

1) INSTRUMENT PRESET, STOP FREQ, 40.1MHz, LO UNLOCK?

2) RES BW ↓ ↓, LO UNLOCK?

3) RANGE -25 DBM, REF LEVEL -15 DBM, SWEEP TIME 1 SEC.

4) AUTO RANGE OFF, 1 DB/DIV, INPUT 1 MEG. OHM

5) TG MAX. AMPLITUDE, CONNECT TO 1 MΩ INPUT THRU 20 DB PAD WITH 50 OHM TERMINATION ON INPUT

6) STORE A−B, A-B, VIEW B OFF, REF. LVL TRACK OFF

7) RANGE ↑ TO +30 DBM, FOR EACH RANGE CHECK FOR ± 1 DB

8) RANGE ↓ TO -25 DBM, MANUAL 40.098765 MHz

9) RES BW 30 KHZ, OFFSET ON, ENTER OFFSET, COUNTER ON

10) RECALL 4, THEN RES BW ↓, FOR EACH BW CHECK FOR OFS CNTR ≤ 1.0 HZ AMPLITUDE ≤ .5 DB EXCEPT 3 Hz BW ≤ 2.0 DB

11) RES BW 3 KHz, SWEEP TIME 5 SEC., CONT

12) CHECK DISPLAY QUALITY

# SERVICE NOTE

SUPERSEDES
NONE

-hp- PART NUMBER 03585-69800

Serial Numbers: All

SERVICE KIT FOR 3585A SPECTRUM ANALYZER

## I. INTRODUCTION

The 03585-69800 is a service kit designed to help facilitate on-site isolation and repair of failures in the -hp- Model 3585A Spectrum Analyzer.The kit contains seventeen PC assemblies, seven extender cards, the processor, two cable assemblies and components with high failure rates as the diagnostic aids.

## II. APPLICATION

A. **PC Boards.** Because board functions in the 3585A are so interrelated (e.g. the L.O. loop cannot be broken effectively), one of a technician's most powerful troubleshooting aids is a set of selected PC boards. Depending on the malfunction, one or two boards will be suspect. This suspicion can be confirmed by substituting in a known-good board.

B. **High Failure Rate Components.** Once the problem is isolated to the board level, the high failure rate parts can be used to isolate the problem to the component level when one of the provided parts is suspected. This quick isolation process should improve turn-around-time by eliminating the possibility of waiting for parts that are actually good.

## III. TROUBLESHOOTING

Troubleshooting the 3585A can be done using the service kit along with the service section of the 3585A manual.

I/IM/WN

9/81-09/WJL

Printed in U.S.A.



HEWLETT PACKARD

**FOR MORE INFORMATION, CALL YOUR LOCAL HP SALES OR SERVICE OFFICE** or East (201) 265-5000 • Midwest (312) 255-9800 • South (404) 955-1500 • West (213) 970-7500 or (415) 968-9200;**OR WRITE,** Hewlett-Packard, 1501 Page Mill Road, Palo Alto, California 94304. **IN EUROPE, CALL YOUR LOCAL HP SALES OR SERVICE OFFICE OR WRITE,** Hewlett-Packard S.A., 7, rue du Bois-du-Lan, P.O. Box CH-1217 MEYRIN 2 -Geneva, Switzerland. **IN JAPAN,** Yokogawa-Hewlett-Packard Ltd., 9-1, Takakura-cho, Hachioji-shi, Tokyo, Japan 192.

## IV. PSP Parts List

**Table 1. Parts List.**

| Qty | Reference Designator | -hp- Part No. | Description |
|---|---|---|---|
| 1 | A3 | 03585-66503 | PC Assy - 100.35 MHz IF Filter |
| 1 | A4 | 03585-66504 | PC Assy - 2nd Mixer |
| 1 | A5 | 03585-66505 | PC Assy - 3rd Mixer |
| 1 | A22 | 03585-66522 | PC Assy - First L.O. VCO |
| 1 | A23 | 03585-66523 | PC Assy - Step Synthesis VTO |
| 1 | A25 | 03585-66525 | PC Assy - Summation Loop Mixer |
| 1 | A26 | 03585-66526 | PC Assy - Step Phase Detector |
| 1 | A27 | 03585-66527 | PC Assy - First L.O. VCO Control |
| 1 | A28 | 03585-66528 | PC Assy - SUM Loop Phase Detector |
| 1 | A31 | 03585-66531 | PC Assy - VTO Regulator |
| 1 | A32 | 03585-66532 | PC Assy - Analog |
| 1 | A33 | 03585-66533 | PC Assy - Divide by N Counter |
| 1 | A34 | 03585-66534 | PC Assy - Interface Regulator |
| 1 | A65 | 03585-64201 | PC Assy - High Voltage Assy |
| 1 | A67 | 03585-66567 | PC Assy - XYZ Board |
| 1 | A63 | 03585-66563 | PC Assy - Display Logic |
| 1 | A2 | 03585-66502 | PC Assy - First Mixer |
| 5 | | 03585-61601 | Cable Assy Extender |
| 1 | | 03585-61616 | Cable Assy Adapter |
| 1 | | 03585-66590 | PC Extender - 36 Pin |
| 1 | | 03585-66591 | PC Extender - 43 Pin |
| 1 | | 03585-66592 | PC Extender - 18 Pin |
| 1 | | 03585-66593 | PC Extender - 10 Pin |
| 1 | | 03585-66594 | PC Extender - 6 Pin |
| 1 | | 03585-66595 | PC Extender - 15 Pin |
| 1 | | 03585-66596 | PC Extender - 15 Pin |
| 3 | | 1250-0669 | Adapter J-J |
| 1 | A13U10 | 1820-1971 | Analog Switch IC-DG201CJ |
| 1 | A14U5 | 1813-0017 | Log AMP |
| 1 | A16U6 | 1820-1984 | D/A CONV IC |
| 1 | A16U8 | 1820-1978 | D/A CONV IC |
| 1 | A33U19 | 1820-2004 | FRAC N Control IC |
| 1 | A41U13 | 09825-67907 | Microprocessor |
| 1 | A41U13 | 5001-1861 | CONN - GSKT ASSY |
| 1 | A42U1-6, 10-14, 21-25 | 1818-0156 | RAM IC |
| 1 | A44U16 | 1820-1691 | NANOPROCESSOR |
| 2 | A1K1-9, 11-14 | 0490-1318 | Relay 2C 12VDC |
| 1 | A1U9, 10 | 1858-0047 | IC Driver |
| 1 | A1U18, 19 | 1990-0444 | OPTO Isolators |
| 2 | A1U15-17, 20 | 1990-0577 | OPTO Isolators |
| 1 | A71U1 | 1813-0110 | PWR IC |
| 1 | A71CR3<br>A72CR3<br>A7CR3<br>A74CR3 | 1990-0598 | LED Lamp Green |
| 1 | A1U1, U3<br>A52U4<br>A51U10 | 1858-0004 | Dual DIF AMP CA3049 |
| 1 | A5U1 | 1826-0062 | IC - Mixer Circuit |
| 1 | A64U5, U7, U8<br>A51U2, U4 | 1826-0188 | Counter MC1407L-8 |
| 1 | A25U1<br>A26U11 or X1 | 0955-0087 | DBL BAL Mixer |
| 1 | A26U2, U3 | 1820-2093 | IC 10010 PC |
| 1 | A21Y1 | 0410-1141 | XTAL 89.99 MHz |
| 1 | A21CR2 | 0122-0072 | Diode BB105 |
| 1 | A51X1 | 0410-1137 | XTAL 10.340 MHz |
| 2 | A51CR1, CR2<br>A53CR5<br>A22CR1, CR2<br>A23CR1, CR2<br>A31CR1, CR2 | 0122-0089 | Diode MV109 |

**Table 1. Parts List (Cont'd)**

| Qty | Reference Designator | hp Part No. | Description |
|---|---|---|---|
| 2 | A11U2-U6<br>A12U1, U3-U6<br>U10, U11<br>A13U6-9<br>A15U13 | 1826-0846 | Quad Analog Switch |
| 2 | A71CR5<br>A72CR6<br>A73CR5<br>A74CR1 | 1990-0597 | LED Lamp Yellow/Front Panel Lamp |
| 1 | A72U5 | 1813-0082 | SW-REG PIC-646 |
| 1 | A73U1 | 1813-0083 | SW-REG PIC-601 |
| 1 | A74U5 | 1813-0084 | SW-REG PIC-611 |
| 1 | A45CR1<br>A44CR2<br>A34DS1-4 | 1990-0486 | LED Red |
| 1 | A63U21 | 1820-1692 | NANOPROCESSOR |
| 1 | | 03585-64501 | Carrying Case Assembly |
| 1 | | 1826-0511 | V.Reg −15 |
| 1 | | 1826-0512 | V.Reg +15 |
| 1 | | 1855-0269 | XSTR SD214 |
| 1 | | 1858-0015 | XSTR ARRAY-SPEC |
| 1 | | 1902-0643 | DIO-ZNR 1N 2979B |
| 1 | | 1902-0909 | DIO-ZNR 8.2V .10 |
| 1 | | 1902-1198 | DIO-ZNR 1N 2973B |
| 1 | | 1902-1204 | DIO ZENER 20V .5 |
| 1 | | 1902-1217 | DIO ZNR 6.2V .05 |

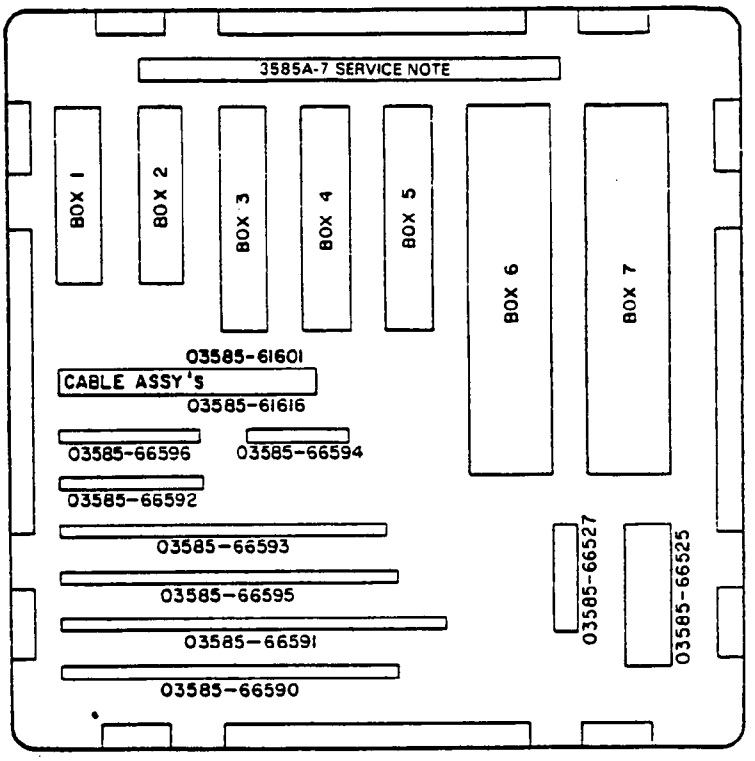


Carrying Case #1

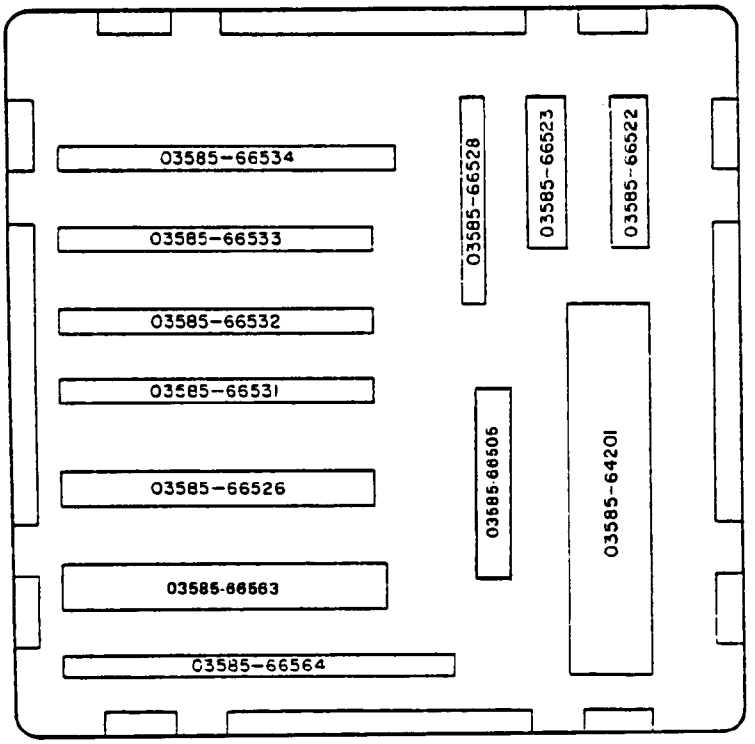


Carrying Case #2

**Figure 1. PSP Layout**

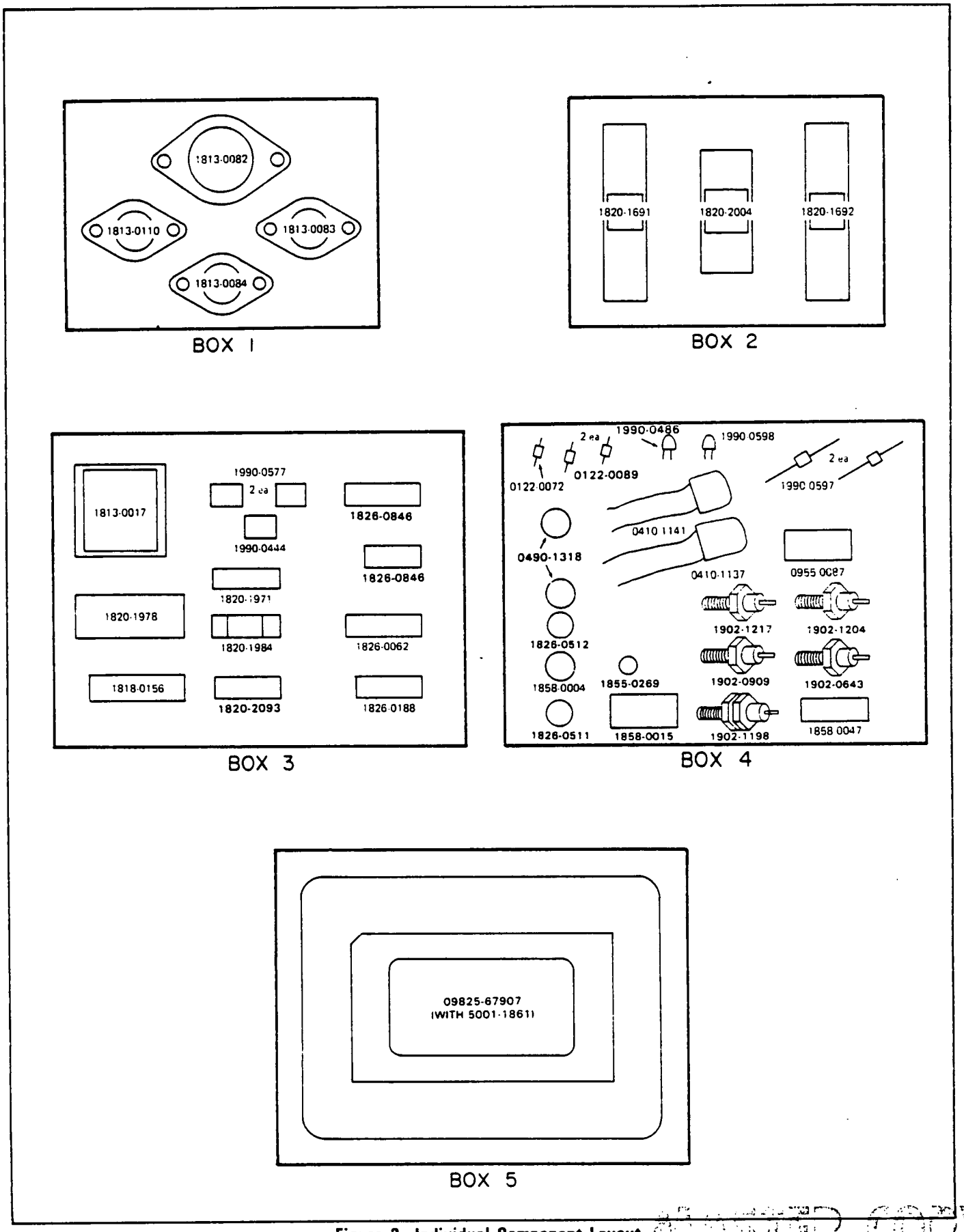


**Figure 2. Individual Component Layout**

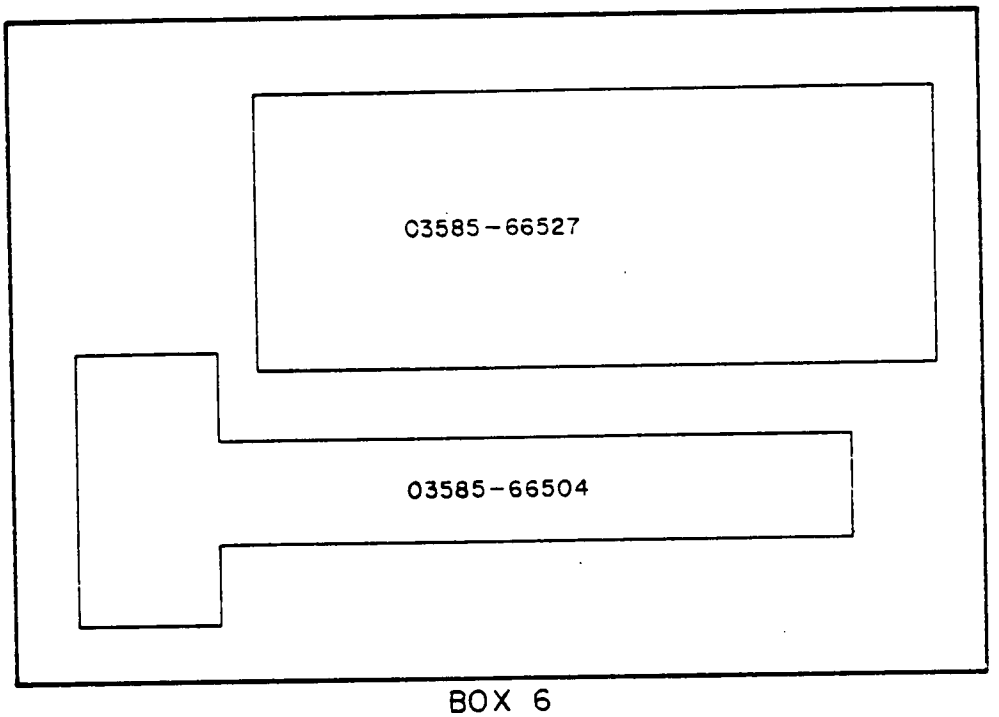


BOX 6

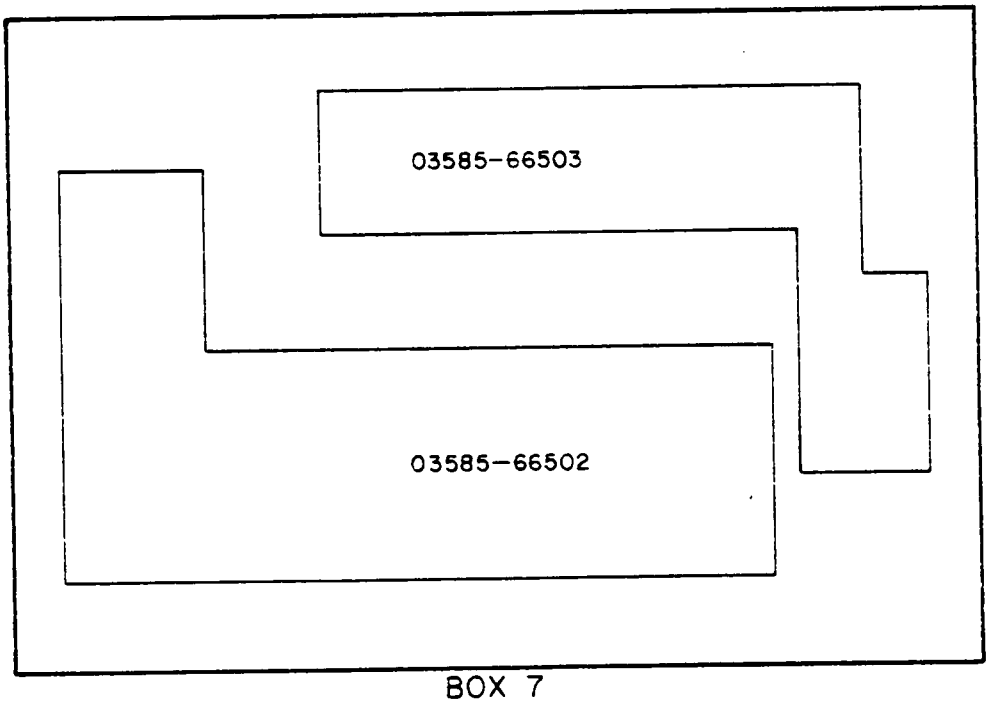


BOX 7

**Figure 2. Individual Component Layout (Cont'd)**

SERVICE NOTE

Supersedes
none

3585A SPECTRUM ANALYZER

ALL SERIAL NUMBERS

IMPROVED INTERMODULATION DISTORTION PERFORMANCE TEST

This modification reduces the measurement uncertainty in the Intermodulation Distortion test by increasing source isolation, allowing better resolution and accuracy when determining an in spec/out of spec condition.

The changes documented in this note are limited to placing 20 dB attenuators in series with both synthesizers' output, and raising both synthesizers' output level 20 dB. All test tolerances are unchanged. The individual changes are listed below.

This note lists the changes to be made to the manual performance test procedures in volume I of the 3585A Service Manual, part number 03585-90006.

1. On page 4-25, under the Equipment Required heading, change the text from "10 dB/Step Attenuator" to "10 dB/Step Attenuator (2 each)".

2. In step b of the procedure on page 4-26, change the initial setting of the 10 dB Attenuators from 0 dB to 20 dB.

3. In Figure 4-5 on page 4-26, sketch in a 10 dB/Step Attenuator between J2 on the Summer and the left hand 3335A Synthesizer.

4. In step d on page 4-26, change the Synthesizer Amplitude setting from -25 dBm to -5 dBm.

5. In step e on page 4-26, change the Synthesizer Amplitude setting from -25 dBm to -5 dBm.

6. In step n on page 4-27, change the Synthesizer Amplitude setting from -25 dBm to -5 dBm.

7. In step o on page 4-28, change the Synthesizer Amplitude setting from -25 dBm to -5 dBm.

Make the changes as noted above in the service manual.

P.C. None

I/OF/WN

1/84 - A1/GSH

Printed in U.S.A.

HEWLETT PACKARD

SERVICE NOTE

Supersedes
none

3585A SPECTRUM ANALYZER

ALL SERIAL NUMBERS

A41 CENTRAL PROCESSOR ASSEMBLY ORDERING INFORMATION

Two ordering options are now available for the 3585A A41 Central Processor Assembly. Since the microprocessor integrated circuit is the major price contributor to the A41 circuit board assembly, the A41 circuit board assembly can now be ordered without this IC. The part numbers and descriptions are explained below.

| Part Number | Description |
|---|---|
| 09825-67907 | Microprocessor Integrated Circuit |
| 5001-1861 | Microprocessor Gasket |
| 03585-69841 | A41 Circuit Board without Microprocessor and Gasket |
| 03585-66541 | A41 Circuit Board with Microprocessor and Gasket |

Ordering a 03585-69841 amounts to a savings of over 60% to the customer over the price of the 03585-66541.

P.C. A1-00259

I/OF/WN

1/84 - A1/CSH

Printed in U.S.A.

HEWLETT PACKARD

**FOR MORE INFORMATION, CALL YOUR LOCAL HP SALES OR SERVICE OFFICE** or East (201) 265-5000 • Midwest (312) 255-9800 • South (404) 955-1500 • West (213) 970-7500 or (415) 968-9200; **OR WRITE**, Hewlett Packard, 1501 Page Mill Road, Palo Alto, California 94304. **IN EUROPE, CALL YOUR LOCAL HP SALES OR SERVICE OFFICE OR WRITE**, Hewlett Packard S.A., 7, rue du Bois-du-Lan, P.O. Box CH-1217 MEYRIN 2 -Geneva, Switzerland. **IN JAPAN**, Yokogawa Hewlett Packard Ltd., 9-1, Takakura-cho, Hachioji-shi, Tokyo, Japan 192

# SERVICE NOTE

Supersedes:
NONE

## HP MODEL 3585A SPECTRUM ANALYZER
## SERIAL NUMBERS: 2050A04740 AND BELOW

### INTERMITTENT CALIBRATION ERRORS MAY BE DUE TO LACK OF FIBER WASHER

PROBLEM:

Intermittent CAL ERRORs 02, 04, or 07 can be caused by the metal can of inductor A14L7 shorting to the A14 PC assembly (Log Amplifier) of the HP3585A.

SOLUTION:

Place a fiber washer (HP P/N 3050-0082) on each of the four "legs" of A14L7.

PROCEDURE:

1. Disconnect the AC power line.
2. Remove the top cover of the instrument.
3. Remove the A14 assembly (P/N 03585-66514).
4. Remove the metal shield on the A14 assembly for access to A14L7.
5. Remove A14L7.
6. Place a fiber washer (HP P/N 3050-0082) on each of the four "legs" of A14L7.
7. Re-install A14L7.
8. Replace the metal shield.
9. Replace A14, the top cover, plug-in the 3585A, and operate as usual.

W/OF/WA



1/86—A100/IB



HEWLETT PACKARD

**FOR MORE INFORMATION, CALL YOUR LOCAL HP SERVICE OFFICE** at East (201) 265-5000 • Midwest (312) 255-9800 • South (404) 955-1500 • West (213) 970-7500 or (415) 968-9200 **OR WRITE,** Hewlett-Packard, 1820 Embarcadero, Palo Alto, California 94303. **IN EUROPE, CALL YOUR LOCAL HP SALES OR SERVICE OFFICE OR WRITE,** Hewlett-Packard S.A., 7, rue du Bois-du-Lan Case Postale 365 CH 1217 Meyrin 1 - Geneva, Switzerland. **IN JAPAN,** Yokogawa-Hewlett-Packard Ltd., 27-15, Yabe, 1 Chrome, Sagamihara City, Kanagawa Prefecture, Japan 229.

# SERVICE NOTE

Supersedes:
None

## HP3585A SPECTRUM ANALYZER

SERIAL NUMBERS: 2504A0440 and below (approximate)

## OVERVOLTAGE PROTECTION CIRCUIT MODIFICATION TO PREVENT INADVERTENT LINE FUSE BLOWS

### Overvoltage Protection (A77) Circuit Description:

Two thyristors, A77CR1 and CR2, are used to protect the HP 3585A from excessive powerline voltages. In normal operation both CR1 and CR2 are OFF and no current flows through R3. R1 and R2 operate as a voltage divider and set the Trip Level of CR1. When the voltage across R2 increases to within the Trip Level Range of CR1 then, CR1 turns ON. This ON state causes CR2 to turn ON as well as enables current to flow through, and a voltage to appear across, R3. In this state the line fuse, F1, blows.

Figure 1 shows the schematic for A77.

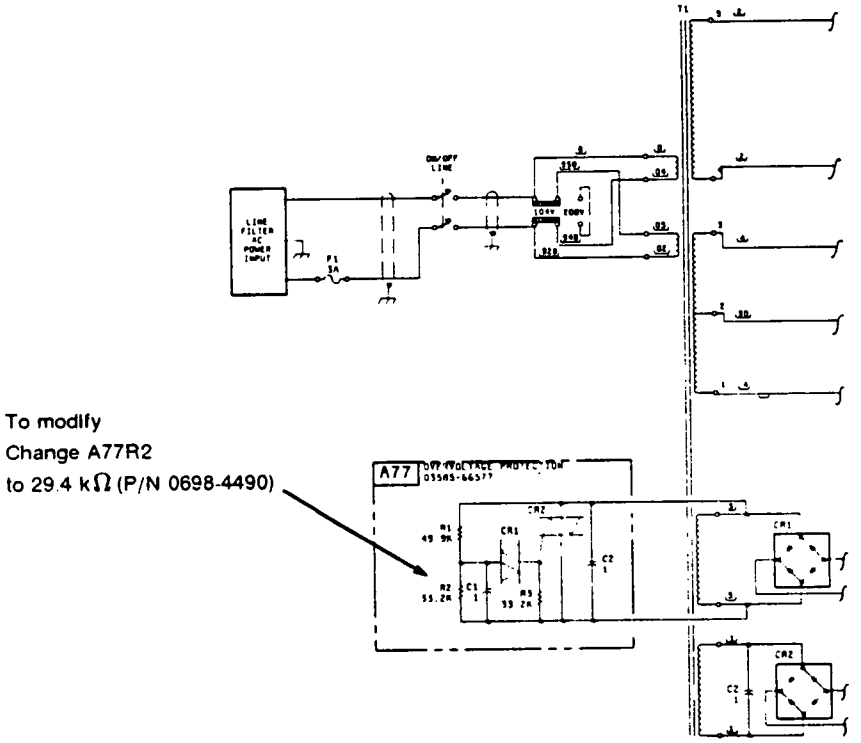


**Figure 1. HP 3585A Overvoltage Protection (A77) schematic.**





HEWLETT PACKARD

**FOR MORE INFORMATION, CALL YOUR LOCAL HP SERVICE OFFICE** at East (201) 265-5000 • Midwest (312) 255-9800 • South (404) 955-1500 • West (213) 970-7500 or (415) 968-9200 **OR WRITE**, Hewlett-Packard, 1820 Embarcadero, Palo Alto, California 94303. **IN EUROPE, CALL YOUR LOCAL HP SALES OR SERVICE OFFICE OR WRITE**, Hewlett-Packard S.A., 7, rue du Bois-du-Lan Case Postale 365 CH 1217 Meyrin 1 - Geneva, Switzerland. **IN JAPAN**, Yokogawa-Hewlett-Packard Ltd., 27-15, Yabe, 1 Chrome, Sagamihara City, Kanagawa Prefecture, Japan 229.

**Problem:**

As the temperature of the HP 3585A (or of the A77 assembly) increases, the Trip Level Range for the thyristors (A77CR1 and CR2) decreases. Therefore, the amount of overvoltage necessary to blow the line fuse also decreases.

This problem can be seen as the line fuse blowing while the HP 3585A is being operated within the specified range of 0 to 55 C.

**Solution:**

Change the value of A77R2 to 29.4k (use HP P/N 0698-4490).

This new value of R2 raises the Trip Level voltage, thus compensating for the temperature "sensitivity" and pre-mature/inadvertent tripping of the thyristors.

Figure 2 shows the location of A77.

**NOTE**

*This modification should take no more than one-half hour to complete.*

| DESIGNATOR | QTY | PART NUMBER | DESCRIPTION |
|---|---|---|---|
| 1 | 1 | 5020-8808 | FRAME REAR |
| 2 | 11 | 1250-0252 | BODY |
| 3 | 1 | 2110-0467 | NUT-HEX 1/2-28 |
| 4 | 1 | 2190-0037 | WSHR-LK INTL T |
| 5 | 11 | 2190-0090 | WSHR-LK INTL T |
| 6 | 11 | 2950-0035 | NUT-HEX-DBL CHAM |
| 7 | 1 | 1400-0090 | WASHER |
| 8 | 1 | 2110-0470 | FUSE HOLDER |
| 9 | 1 | 2110-0465 | CAP, FUSE HOLDER |
| 10 | 2 | 0380-0643 | STOP-STUD MT |
| 11 | 2 | 2190-0009 | WSHR-LK INT T |
| 12 | 1 | 8120-2616 | CABLE-HP-IB |
| 13 | 4 | 0590-0167 | NUT-THUMB |
| 14 | 4 | 2190-0009 | WASHER-LK INTL T |
| 15 | 1 | 3150-0218 | FILTER, FAN |
| 16 | 1 | 03585-04131 | COVER REAR PNL |
| 17 | 1 | 03582-04104 | SCREEN FAN |
| 18 | 1 | 3160-0306 | FAN |
| 19 -22 | 1 | 1820-0430 | LIN REG 5V LM309K |
| 20 | 1 | 1901-0526 | DIO ASSY-S1 |
| 21 | 1 | 1906-0212 | RECT MDA3504 |
| 22-03 | 1 | 1826-0402 | PWR V REG +15V |
| **23** | **1** | **03585-66577** | **AC PROTECT BRD** |
| 24 | 1 | 03585-01217 | BRKT-REAR CVR |
| 25 | 1 | 03585-00203 | PANEL, REAR |
| 26 | 1 | 5100-4060 | XFMR-PWR |
| 27 | 1 | 03585-01213 | BRKT-T MOUNT |
| 28 | 1 | 03585-01211 | BRKT-T |

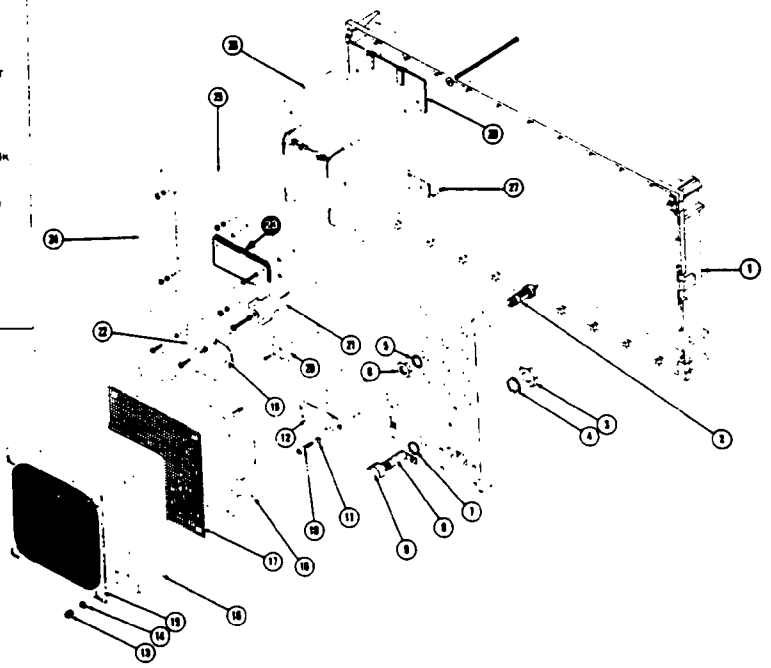

**Figure 2. HP 3585A - A77 assembly location.**

# SERVICE NOTE

Supersedes:
None

## 3585A Spectrum Analyzer

Serial Numbers: 2504A05459 and below

## "OSC UNLOCK" for Resolution Bandwidths of 3kHz and Below

**Problem:**

Instruments with serial numbers 2504A05459 and below may exhibit an "OSC UNLOCK" condition when the resolution bandwidth is set for 3kHz or lower. The unlock may be intermittent and may not occur on all units. This failure is due to an overdrive condition at the input of U2 on the A31 assembly, causing the 35-65MHz VTO to unlock above 50MHz.

**Solution:**

The A31 (VTO divider) assembly has been modified in instruments with serial numbers 2504A05460 and above. Instruments with serial numbers below this range should be modified if they exhibit the failure. This Service Note includes the modification procedure.

***It should take no more than 20 minutes to perform this modification.***

**Parts Added:**

| Quantity | HP Part Number | Ref. Des. | Description |
|---|---|---|---|
| 1 | 1200-0607 | A31X1 | 16-pin socket |
| 1 | 0360-0124 | A31H22 | test pin |
| 1 | 0683-2215 | A31R78 | R-F 220 ohm, 1/4W, 5% |
| 1 | 0160-4790 | A31C39 | C-F 12pF, 100VDC, 5% |
| -- | 0470-1240 | -- | "Loctite Tak-Pak" adhesive and metered mist spray accelerator |

**Modification Procedure:**

**WARNING**

*To avoid electrical shock, turn OFF the instrument's power switch, and disconnect the power cord.*

1. Remove the A31 board from the HP 3585A.





HEWLETT PACKARD

**FOR MORE INFORMATION, CALL YOUR LOCAL HP SERVICE OFFICE** at East (201) 265-5000 • Midwest (312) 255-9800 • South (404) 955-1500 • West (213) 970-7500 or (415) 968-9200 **OR WRITE**, Hewlett-Packard, 1820 Embarcadero, Palo Alto, California 94303. **IN EUROPE, CALL YOUR LOCAL HP SALES OR SERVICE OFFICE OR WRITE**, Hewlett-Packard S.A., 7, rue du Bois-du-Lan Case Postale 365 CH 1217 Meyrin 1 - Geneva, Switzerland. **IN JAPAN**, Yokogawa-Hewlett-Packard Ltd., 27-15, Yabe, 1 Chrome, Sagamihara City, Kanagawa Prefecture, Japan 229.

**On the component side of the A31 board:**

2. Remove U2 from the board, being careful not to lift any circuit traces. **Do not discard U2. You will reuse this part.**
3. Insert socket X1 (HP P/N 1200-0607) in place of U2. Solder all pins except pins 8 and 10.
4. Unsolder and lift the end of R16 closest to socket X1. Install and solder test pin H22 (HP P/N 0360-0124) in this hole.
5. Crimp the lifted end of R16 to the base of test pin H22 and solder. Make sure that this connection is secure.
6. Insert U2 (which you removed in step 2) in socket X1.

**On the circuit side (back) of the A31 board (refer to Figure 1):**

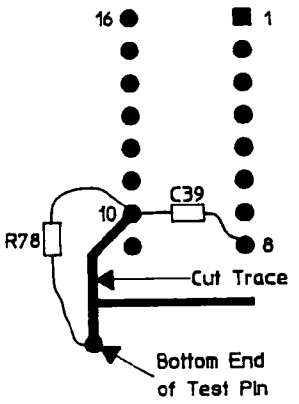


**Figure 1. U2 and modifications as seen from the circuit side (back) of the PC board.**

7. Using an "Xacto knife", cut the trace which goes to pin 10 of U2. Be careful not to cut into inner layers of the PC board.
8. Wrap, crimp, and solder one end of capacitor C39 (HP P/N 0160-4790) to pin 8 of socket X1 at U2.
9. Wrap and crimp the other end of capacitor C39 and one end of resistor R78 (HP P/N 0683-2215) to pin 10 of socket X1 at U2. Solder the connection.
10. Wrap, crimp, and solder the other end of R78 to test pin H22.
11. Apply "Tak-Pak" adhesive to the trace that you cut in step 7. **Do not get any adhesive on soldered areas of the PC board.** This prevents the trace from lifting off the PC board.
12. Carefully spray the accelerator mist over the place you applied the adhesive. This makes the adhesive cure faster.
13. When the adhesive is dry, replace the A31 board into the HP 3585A.
14. Add the parts listed under "Parts Added:" to the Replaceable Parts List (Table 9-3) in the HP 3585A Service Manual.

DISPIO 9 Sept 1987 Rich Wilson

The purpose of this document is to document the interface between the processor and the display board in the IMAGE project.

I. Refresh timing

A refresh is defined as the process of drawing the desired image on the display tube once.
The timing of refresh cycles is handled by the main processor. It occurs at a rate of approximately 60 Hz.
There are two signals which interface the main processor and the display controller for
purposes of refresh timing. They are DSPGO and /DSPIR. DSPGO is a signal which goes directly to the /RESET input on the display controller. Initially, the DSPGO signal is low, which holds the display in its reset state. In this state, the display controller holds the /DSPIR signal high. When the main processor wishes a refresh to begin, it makes the DSPGO signal high, and the display controller begins to access data and draw on the tube. When the display controller finds an instruction which specifies the end of the display buffer, it makes the signal /DSPIR low. This interrupts the main processor, which will make the signal DSPGO low. This resets the display controller, which will in turn return /DSPIR to its original high state. At this time, the main processor may either

1) Wait for a length of time before restarting a refresh, or
2) Immediately restart the display controller.

The latter may happen for one of two reasons:

1) It took longer than 16mS to refresh the display, so the main processor needs to keep the display controller busy, or
2) The main processor has the desired display refresh data in more than one buffer, and so needs to restart the display controller several times for each refresh.

II DATA TRANSFER

There are two signals which interface the main processor and the display controller for purposes of transferring data. These are /DMARQ and /DMARDY. Initially, when the display controller is in its reset state, it should hold the /DMARQ signal high. When the display controller is ready for a word of information, it should bring the /DMARQ signal low to request data. The main processor will bring the signal /DMARDY low about 100nS before it puts the first (next) word of data on the 16 display data lines DD0 through DD15. When the display controller sees the /DMARDY signal low, it should bring the /DMARQ signal high. The main processor will then bring the /DMARDY signal high to finish the handshake.

The display controller may leave /DMARQ low as long as it wishes without impacting the performance of the main processor. The main processor will bring the /DMARDY signal high within about 100nS of when the display controller brings the /DMARQ signal high, so there is no need for the display controller to test for the /DMARDY signal to be high. The display controller should leave the /DMARQ signal high for at least 200nS before lowering it again to make sure that the main processor has seen it in that state.
As soon as the display controller has made use of the data on the display data lines DD0 through DD15, (for example, by latching it into a latch)

left-most side of the display) and 1023 (which represents the right-most side of the display).

After performing a load_x command, the display controller holds the x position as commanded until a subsequent command sends it elsewhere.

2. load_y
The load_y command acts precisely as the load_x command, except that it affects the y position instead of the x position.

4. enter_graphics
The enter_graphics command causes the display controller to begin treating subsequent words as graphics commands. Go down and read the next section to see how the display controller treats these words.

5. alpha
The alpha command causes the display controller to display one character. The I field is ignored. The Value field contains the address of the character dot data in the display controller's character generator rom. The character will be displayed at the current location of the beam (as commanded with load_x, load_y, or any other commands which move the beam). At the termination of the alpha command, the beam will be located one character cell to the right of where it started, ready to draw the next character. If an attempt should be made to display a character to the right of the right side of the screen, the character will wrap around to the beginning of the same line. The character may be split in two, with part being on the right side and part being on the left side of the display.

When drawing an alpha character, the y-axis scaling is changed to enable characters to be drawn above or below the graphics area. This scaling causes a y-value of zero to draw characters at the very bottom of the screen, and a y-value of 1023 to draw characters at the very top of the screen.

6. alpha_bright
The alpha_bright command acts exactly as the alpha command, except that the letter is displayed more brightly.

7. end_of_refresh
The end_of_refresh command causes the display controller to stop accessing data words, and turn off the beam. It brings the signal /DSPIR low to signal to the main processor that it has reached the end of its display buffer.

B. GRAPHICS COMMANDS

Graphics commands act similarly to root level commands, in that the display controller continues to access words and process them as graphics commands until told to do otherwise.

| Op | Action |
|---|---|
| 0 | normal |
| 1 | dot |
| 2 | on |

3 on_dot
4 off
5 off_dot
6 end_graphics
7 end_of_refresh (?)

0. normal
When the display controller gets a word in graphics mode with an Op field of 0, it treats it as a normal vector draw. This implies two actions:
1. The x position is incremented by one. (if not Bin(0))
2. The y position is changed to the number stored in the Value field.

The intensity of the beam is not controlled by the I field in graphics mode. Instead, it is controlled by the blanking state. The blanking state may be either off or on.
If the blanking state is off, the move will occur, but will not be visible on the tube. If the blanking state is on, the move will be visible. When the display controller first enters the graphics mode, it sets the blanking state to off. This means that the first vector drawn is never visible. This provides a means of getting the beam to the location for bin 0 without messing up the display.

Move X

The blanking state is not changed by a normal graphics command.

1. dot
The dot command works the same as a normal move, with one exception. After the vector move has been made, the display controller turns on the beam and leaves it on for a period of time. This causes a bright dot to appear.

2. on
The on command works the same as a normal move, with one exception. After the vector move has been made, the blanking state is set to on. This means that subsequent vectors will be visible.

3. on_dot
The on_dot command works the same as a normal move, with two exceptions. First, after the vector move has been made, the display controller turns on the beam and leaves it on for a period of time. This causes a bright dot to appear. Second, after the dot has been made, the blanking state is set to on. This means that subsequent vectors will be visible.

4. off
The off command works the same as a normal move, with one exception. After the vector move has been made, the blanking state is set to off. This means that subsequent vectors will be invisible.

5. off_dot
The off_dot command works the same as a normal move, with two exceptions. First, after the vector move has been made, the display controller turns on the beam and leaves it on for a period of time. This causes a bright dot to appear. Second, after the dot has been made, the blanking state is set to off. This means that subsequent vectors will be invisible.

6. end_graphics
   The end_graphics command causes the display controller to treat subsequent words as root level commands.

7. end_of_refresh
   The end_of_refresh command causes the display controller to stop accessing data words, and turn off the beam. It brings the signal /DSPIR low to signal to the main processor that it has reached the end of its display buffer.

HEWLETT PACKARD

## SAFETY SUMMARY

**The following general safety precautions must be observed during all phases of operation, service, and repair of this instrument. Failure to comply with these precautions or with specific warnings elsewhere in this manual violates safety standards of design, manufacture, and intended use of the instrument. Hewlett-Packard Company assumes no liability for the customer's failure to comply with these requirements. This is a Safety Class 1 instrument.**

### GROUND THE INSTRUMENT

To minimize shock hazard, the instrument chassis and cabinet must be connected to an electrical ground. The instrument is equipped with a three-conductor ac power cable. The power cable must either be plugged into an approved three-contact electrical outlet or used with a three-contact to two-contact adapter with the grounding wire (green) firmly connected to an electrical ground (safety ground) at the power outlet. The power jack and mating plug of the power cable meet International Electrotechnical Commission (IEC) safety standards.

### DO NOT OPERATE IN AN EXPLOSIVE ATMOSPHERE

Do not operate the instrument in the presence of flammable gases or fumes. Operation of any electrical instrument in such an environment constitutes a definite safety hazard.

### KEEP AWAY FROM LIVE CIRCUITS

Operating personnel must not remove instrument covers. Component replacement and internal adjustments must be made by qualified maintenance personnel. Do not replace components with power cable connected. Under certain conditions, dangerous voltages may exist even with the power cable removed. To avoid injuries, always disconnect power and discharge circuits before touching them.

### DO NOT SERVICE OR ADJUST ALONE

Do not attempt internal service or adjustment unless another person, capable of rendering first aid and resuscitation, is present.

### USE CAUTION WHEN EXPOSING OR HANDLING THE CRT

Breakage of the Cathode-ray Tube (CRT) causes a high-velocity scattering of glass fragments (implosion). To prevent CRT implosion, avoid rough handling or jarring of the instrument. Handling of the CRT shall be done only by qualified maintenance personnel using approved safety mask and gloves.

### DO NOT SUBSTITUTE PARTS OR MODIFY INSTRUMENT

Because of the danger of introducing additional hazards, do not install substitute parts or perform any unauthorized modification to the instrument. Return the instrument to a Hewlett-Packard Sales and Service Office for service and repair to ensure that safety features are maintained.

### DANGEROUS PROCEDURE WARNINGS

Warnings, such as the example below, precede potentially dangerous procedures throughout this manual. Instructions contained in the warnings must be followed.

**WARNING**

**Dangerous voltages, capable of causing death, are present in this instrument. Use extreme caution when handling, testing, and adjusting.**

## SAFETY SYMBOLS

**General Definitions of Safety Symbols Used On Equipment or In Manuals.**

Instruction manual symbol: the product will be marked with this symbol when it is necessary for the user to refer to the instruction manual in order to protect against damage to the instrument.

Indicates dangerous voltage (terminals fed from the interior by voltage exceeding 1000 volts must be so marked).

OR

Protective conductor terminal. For protection against electrical shock in case of a fault. Used with field wiring terminals to indicate the terminal which must be connected to ground before operating equipment.

Low-noise or noiseless, clean ground (earth) terminal. Used for a signal common, as well as providing protection against electrical shock in case of a fault. A terminal marked with this symbol must be connected to ground in the manner described in the installation (operating) manual, and before operating the equipment.

OR

Frame or chassis terminal. A connection to the frame (chassis) of the equipment which normally includes all exposed metal structures.

Alternating current (power line).

Direct current (power line).

Alternating or direct current (power line).

**WARNING**

The WARNING sign denotes a hazard. It calls attention to a procedure, practice, condition or the like, which, if not correctly performed or adhered to, could result in injury or death to personnel.

**CAUTION**

The CAUTION sign denotes a hazard. It calls attention to an operating procedure, practice, condition or the like, which,if not correctly performed or adhered to, could result in damage to or destruction of part or all of the product.

NOTE:

The NOTE sign denotes important information. It calls attention to procedure, practice, condition or the like, which is essential to highlight.

## Volume I
## Table of Contents



## Volume II
## Table of Contents

# Table of Contents

## Table of Contents (Cont'd)

## Table of Contents (Cont'd)

## List of Schematics

# SECTION V
# ADJUSTMENTS

**Note :** The sections 1-4 are in the HP 3585B Spectrum Analyzer Operating Manual. This manual starts with section five through section eleven.

# SECTION V
# ADJUSTMENTS

## 5-1. INTRODUCTION

This section contains complete adjustment procedures for the Model 3585 Spectrum Analyzer. Table 5-1 lists the adjustments and their affected components. Figures 5-45 and 5-46 are foldout drawings found at the end of this section. These drawings show adjustment locations throughout the instrument.

**Table 5-1. Adjustment Locations**

| Adjustment | Paragraph Location | Affected Components | Service Group |
|---|---|---|---|
| Low Voltage Power Supplies (A71-75) | 5-6 | A75R9,R15, A72R31, R19 | I |
| 90MHz Reference Board (A21) | 5-7 | A21R125 | B-1 |
| 10MHz Oven Oscillator (A81) | 5-8 | A81R2 | B - 1 |
| Oven Output Shutdown | 5-9 | A81R9 | B - 1 |
| CRT Control and High Voltage Power Supply (A65,67,85) | 5-10 | A67R46,R6,R105,R116, A65R13,A85R2 | D-1,4 |
| CRT Graphics (A67,85,86) | 5-11 | A67R59,R85,R54,R80, R3,R2,R1,A85R2,A86R10, R33,R123,C7 | D-1,2,4 |
| CRT Alphanumerics (A86) | 5-12 | A86R36,R40,R41,R72 | D-3 |
| Fractional N (A31-34) | 5-13 | A34R32,A31L3, A32R49,R56 | B-4,5 |
| L.O. Step Loop (A23-26) | 5-14 | A23L1 | B-3 |
| First L.O. VTO and Sum Loop | 5-15 | A27R2,R11 | B-2 |
| Video Filter and A/D (A15,16) | 5-16 | A16R21,R19,A15R4 | A-5,6 |
| Log Amp and 30kHz Filter (A14) | 5-17 | A14L5,L7,R57,R53 A17R105,A15R7 | A-3,4,5 |
| Log Amp Slope Adjustment (A14) | 5-18 | A14R43,R17,R7,R8, R14,R21,R26 | A-4 |
| Reference Level DC Offset (A15) | 5-19 | A15R9,R7 | A-5 |

**Table 5-1. Adjustment Locations (Cont'd)**

| Adjustment | Paragraph Location | Affected Components | Service Group |
|---|---|---|---|
| IF Filters (A17-19) | 5-20 | A19C39,C41 | A-3 |
| Fifth Crystal Stage | 5-21 | A19L7,C41 | |
| Fourth Crystal Stage | 5-22 | A19L6,C30 | |
| Fourth LC Stage | 5-23 | A19L5,R28 | |
| Fifth LC Stage | 5-24 | A19L4,R20 | |
| Third Crystal Stage | 5-25 | A18L6,C24,L4 | |
| Third LC Stage | 5-26 | A18L5,R15 | |
| Second Crystal Stage | 5-27 | A17L7,C39 | |
| First Crystal Stage | 5-28 | A17L6,C29,L8 | |
| Second LC Stage | 5-29 | A17L4,R12 | |
| First LC Stage | 5-30 | A17L5,R20 | |
| Final IF Filter Adjustments (A17) | 5-31 | A17C27, C37, A18, A19, C22, C28, C39, R26, R28, R30, R32, R34 | A-3 |
| 16dB Amplifiers (A18) | 5-32 | A18R77,R71,R65 | A-3 |
| Conversion Section | 5-33 | A2C3,L7,L8,L11,L12, A3L1,L3,L5,L7,C8, A4L7,C2,C3,A5L1-6,T3, T4 | A - 2 |
| Input Section | 5-34 | A-1 | |
| Calibrator Symmetry | 5-35 | A1R52 | A - 1 |
| Flatness | 5-36 | A1R131,C83,L18,C86, L19,C89,L21,C92 | |
| Range Up Detector | 5-37 | A1R173 | |
| Range Down Detector | 5-38 | A1R174 | |
| Top Of Screen Amplitude | 5-39 | A17R105 | |
| Calibrator Level | 5-40 | A1R39 | |
| 1MΩ Amplitude | 5-41 | A1R108 | |
| 1MΩ Flatness | 5-42 | A1C21,C27 | |
| 1MΩ Input Capacitance | 5-43 | A1C18 | |
| Local Oscillator Feedthrough | 5-44 | A1R170 | |
| Electrical Isolation | 5-45 | | |
| Tracking Generator | 5-46 | A52R68,C50,C16 | E |

## 5-2. Equipment Required

Table 5-2 lists the equipment required to perform the adjustments on the 3585 Equipment that meets or exceeds the required characteristics given in the table may be substituted for the recommended models.

**Table 5-2. Recommended Adjustment Equipment**

| Equipment | Required Characteristics | Recommended Model |
|---|---|---|
| Digital Volt/Ohmmeter | DC Volts: 2V,20V,200V range<br>Accuracy: ±0.04%<br>Input Impedance 10MΩ<br>Ohms: 200<br>Accuracy: ±0.07% | HP 3466A |
| High Frequency AC Voltmeter | AC Volts: 0.3V,3V range<br>Frequency Response: 100Hz to 1MHz<br>Input Impedance: 10MΩ<br>Accuracy: ±1% | HP 400E or HP 3400A |
| Oscilloscope | Bandwidth: dc to 100MHz<br>Vertical Range: 5mV/div to 20V/div<br>Horizontal Range: 50nsec/div to 100msec/div | HP 1740A or HP 54100A with HP 54002A |
| High Voltage Probe | Accuracy: ≤1%<br>Input Impedance: ≥$10^9$ Ohms<br>Measurement Range: ≥6kV | HP 3440A-K05 or HP 34111A |
| Frequency Counter | Frequency Range: 10Hz to 150MHz<br>Accuracy: ±1 count ± time base error<br>Resolution: 0.1Hz | HP 5382A or HP5328B Option 010 |
| Frequency Synthesizer | Frequency Range: 200Hz to 40MHz<br>Amplitude Accuracy: ±0.27dB | HP 3335A |
| Attenuator 1dB/Step | Attenuation Range: 0 to 12dB<br>Accuracy: ±0.2dB<br>Frequency Range: dc to 40MHz | HP 355C |
| Attenuator 10dB/Step | Attenuator Range: 0 to 100dB<br>Accuracy: ±0.5dB<br>Frequency Range: dc to 40MHz | HP 355D |
| 10kΩ Resistor | ±1%, 1/8 Watt | HP P.N. 0757-0442 |
| BNC-To-Sealectro Adapter Cable | Supplied with instrument | HP P.N. 03585-61616 |
| Optional Spectrum Analyzer | Frequency Range: 100kHz to 150MHz<br>Amplitude Accuracy: ±3dB | HP 8558B |
| Resistor Probe | 20:1Resistive Divider<br>1kΩ Input Resistance | HP 10020A |

## 5-3. Test Point And Adjustment Locations

Test point and adjustment location are shown on PC board component location diagrams in the Adjustment Procedures. The adjustment locations for the Input and Conversion Section as well as other adjustments are at the end of this section. For many of the adjustments it is necessary to remove the PC board from the card nest. *Always set the 3585 LINE switch to off before removing or replacing a PC board unless instructed to do otherwise.* Some adjustments require power to be left on to retain the control settings. When instructed to leave the power on while removing or replacing a PC board be careful to keep the PC edge connector properly aligned. Misalignment of the PC edge connector during insertion can short the power supplies.

## 5-4. ADJUSTMENT SEQUENCE

The adjustment procedures are presented in a logical sequence that will minimize interaction between adjustments. Although the performance tests might indicate that only one or two adjustments are needed, we recommend that you perform all adjustments for any particular instrument section i.e. input, LO, IF. There are three exceptions to this rule: 1) The display section and 2)Oven Oscillator may be done independent of all other adjustments: 3) the IF Filter adjustments are very time consuming and may be omitted if the instrument passes the Bandwidth Measurement Test. The Final IF Adjustment procedure should be done whether or not the IF Filter adjustments are omitted.

## 5-5. Synthesizer Connections

Unless otherwise noted the synthesizer used to perform the adjustments must be frequency locked to the 3585's 10MHz REF OUTPUT. Failure to make this connection will degrade the accuracy of the adjustments.

## 5-6. Low Voltage Power Supply Adjustments (A71-75)

These adjustments set the 18V reference voltage, 20kHz oscillator and 5V supply associated with the Low Voltage Power supplies.

a. Remove the plastic cover from the Low Voltage Power Supply Section.

b. Remove the metal PC board hold-down bar.

c. Connect a DVM to A75TP1.

d. Adjust A75R9 for a voltage reading of +18.2V ± 0.02V.

e. Remove the DVM.

f. Using a 10:1 scope probe, connect a Frequency Counter to A75TP2.

g. Adjust A75R15 for a frequency reading of 20kHz ± 10Hz.

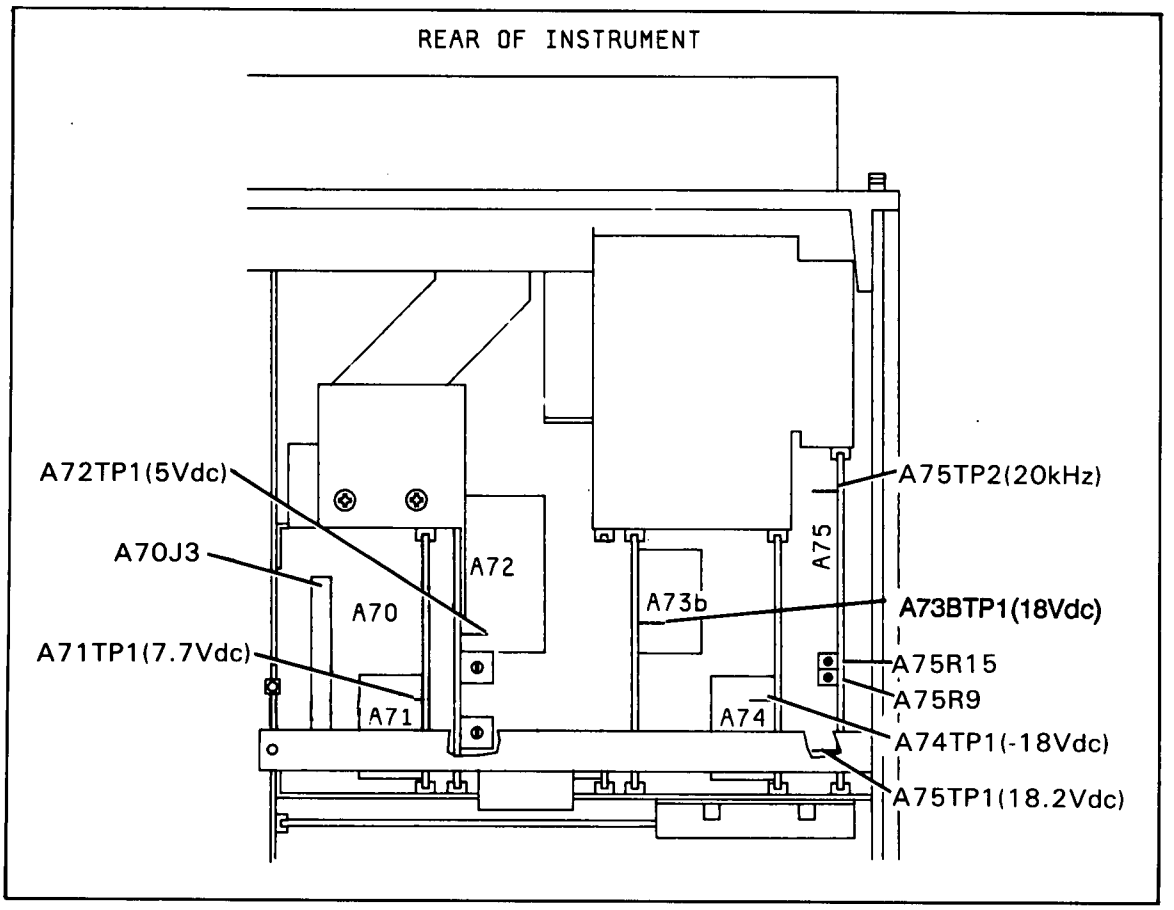


**Figure 5-1. Power Supply Adjustment Locations**

h. Using a 10:1 probe, connect an oscilloscope to A75TP2. Set the Oscilloscope controls as follows:

VERTICAL ..... 0.2V/Div.
HORIZONTAL ..... 10μsec/Div.
INPUT..... DC coupled

i. Verify that the observed waveform is within ± 10% of that shown in Figure 5-2.

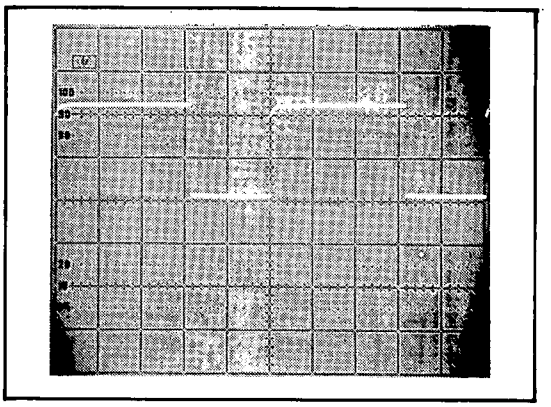

**Figure 5-2. Power Supply Clock Output.**

j. Connect the DVM to A72TP1. Adjust A72R31 for 5.4V ± 0.05V.

k. Turn the 3585 power off. Remove PC boards A71 and A72.

l. Disconnect the cable from A70J3. Replace PC boards A71 and A72.

m. Connect a 1Ω, 25W resistor from A72TP1 to chassis ground.

**WARNING**

*The 1Ω resistor used for this adjustment can reach a temperature that will cause burns. Handle this resistor with caution.*

n. Turn the 3585 power on. Adjust A72R19 so that the yellow current limit indicator just goes out.

o. Turn the 3585 power off. Disconnect the resistor from A72.

p. Remove the A71 and A72 board. Reconnect the cable associated with A70J3. Replace the A71 and A72 boards.

q. Using a DVM, check each of the voltages below to verify that the various power supplies are working properly.

| | |
|---|---|
| A74TP1 | −18V ± 0.9V |
| A73bTP1 | +18V ± 0.9V |
| A71TP1 | +7.7V ± 0.6V |

r. Disconnect the DVM. Replace the PC board Hold-down bar and the plastic cover for the power supplies. This completes the Low Voltage Power Supply Adjustments.

## 5-7. 90MHz Reference Board Adjustments (A21)

**NOTE**

*The same frequency counter and reference should be used for all reference oscillator adjustments.*

This adjustment sets the frequency of the 90MHz crystal oscillator on the A21 board. This crystal oscillator is used during warm-up and in the absence of an EXT REF INPUT.

a. Disconnect the cables from A21J1 and A21J7.

b. Connect a frequency counter to A21J1.

c. Adjust A21R125 (see Figure 5-45) for a frequency reading of 90MHz ± 20Hz.

d. Reconnect the A21J7 cable if continuing with Oven Output Shutdown Adjustments. Reconnect the A21J1 and A21J7 cables if not continuing.

## 5-8. Oven Output Shutdown Adjustment

This adjustment sets the point where the Oven Oscillator will begin to be used as the 3585's reference. During warm-up the Oven Oscillator's frequency is locked to the 90 MHz ref. oscillator. This adjustment causes the OVEN REF OUT to be shut-off during this warm-up period.

**NOTE**

*With the OVEN power cable disconnected, allow the instrument to warm up 20 minutes or more before beginning this adjustment.*

a. Connect OVEN Power Cable. (A81J2)

b. Remove the jumper between the OVEN REF OUT and the EXT REF IN on the 3585

c. Connect the OVEN REF OUT to the 3585 50Ω input.

d. After the 3585 has completed Autoranging, turn the AUTORANGE function off.

e. Adjust A81R9 (SHUT) to the point where the 10MHz signal level just turns off (on ≈ +7 dBm off ≈ -35dBm).

f. Adjust A81R9 one eighth turn clockwise.

g. Replace the jumper between the OVEN REF OUT and the EXT REF IN.

h. Disconnect all inputs to the counter and the 3585. Connect the 3585 10MHz. Ref Output to the 3335 40/N Ref Input.

i. This completes the Reference Oscillator Adjustments.

## 5-9. 10MHz Oven Oscillator Adjustments

This adjustment sets the frequency of the 3585 oven oscillator. It is important that a frequency counter with greater accuracy and stability than that of the 3585 reference be used for this adjustment.

**NOTE**

*All instruments used for this adjustment should be turned on for at least 20 minutes (preferably longer) prior to beginning adjustments.*

a. Remove any connections between the synthesizer reference connectors and the 3585 rear panel reference connectors.

b. Connect both the 3585 and the synthesizer to their own internal references. For the 3585, use the supplied BNC shorting bar to connect the OVEN REF OUT to the EXT REF IN.

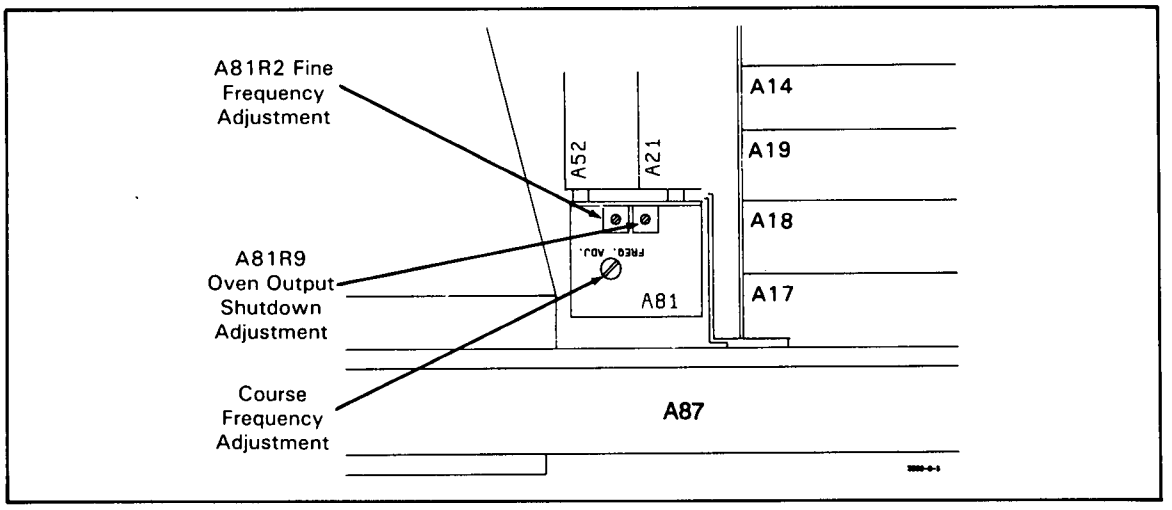


**Figure 5-3. Oven Oscillator Adjustment Locations**

c. Connect the Frequency counter to A21J1.

d. Remove the screw on the A81 Oven assembly that covers the course frequency adjustment.

e. Adjust A81R2 to the center of its range.

f. Adjust the Course Frequency control on the A81 board so that the frequency counter reads 90MHz ± 1Hz. Allow time for the oven oscillator to stabilize after each adjustment.

g. Disconnect the frequency counter from A21J1. Reconnect the proper cable to A21J1.

h. Set the synthesizer for:

FREQUENCY.....9MHz
AMPLITUDE.....0dBm

i. Set the 3585 controls for:

INSTRUMENT PRESET
CENTER FREQUENCY.....9MHz
COUNTER.....on
MANUAL SWEEP.....on

j. Using a BNC "Tee", connect the synthesizer output to the 3585 50Ω input and the external Frequency Counter input.

k. Adjust the fine frequency adjustment, A81R2, (and the course frequency adjustment if necessary) so that the 3585 counter frequency matches the external Frequency Counter reading. Again, allow 5-10 minutes between adjustments so that the oven oscillator will stabilize.

l. Replace the screw that covers the course Frequency Adjustment.

m. If other adjustments are to be made, reconnect the 3585 10MHz REF OUTPUT to the synthesizer reference input.

## 5-10. CRT Control And High Voltage Power Supply Adjustments

a. Turn the 3585 power off. Place the 3585 on its left side and remove the bottom cover.

b. Place the XYZ board (A67) on a PC extender board. Screwed the PC extender in place for stability. Leave all cables connected to A67. (Support the A67 board if necessary.)

c. Unplug the cables from the "Xin" and "Yin" connectors. Using clip leads, short the "Xin" pins together. Now short the "Yin" pins together.

d. Move A67J11 to the "T" position and disconnect A67J6.

e. Set the oscilloscope controls for:

VERTICAL.....1V/Div (DC coupled)
HORIZONTAL.....10μs/Div

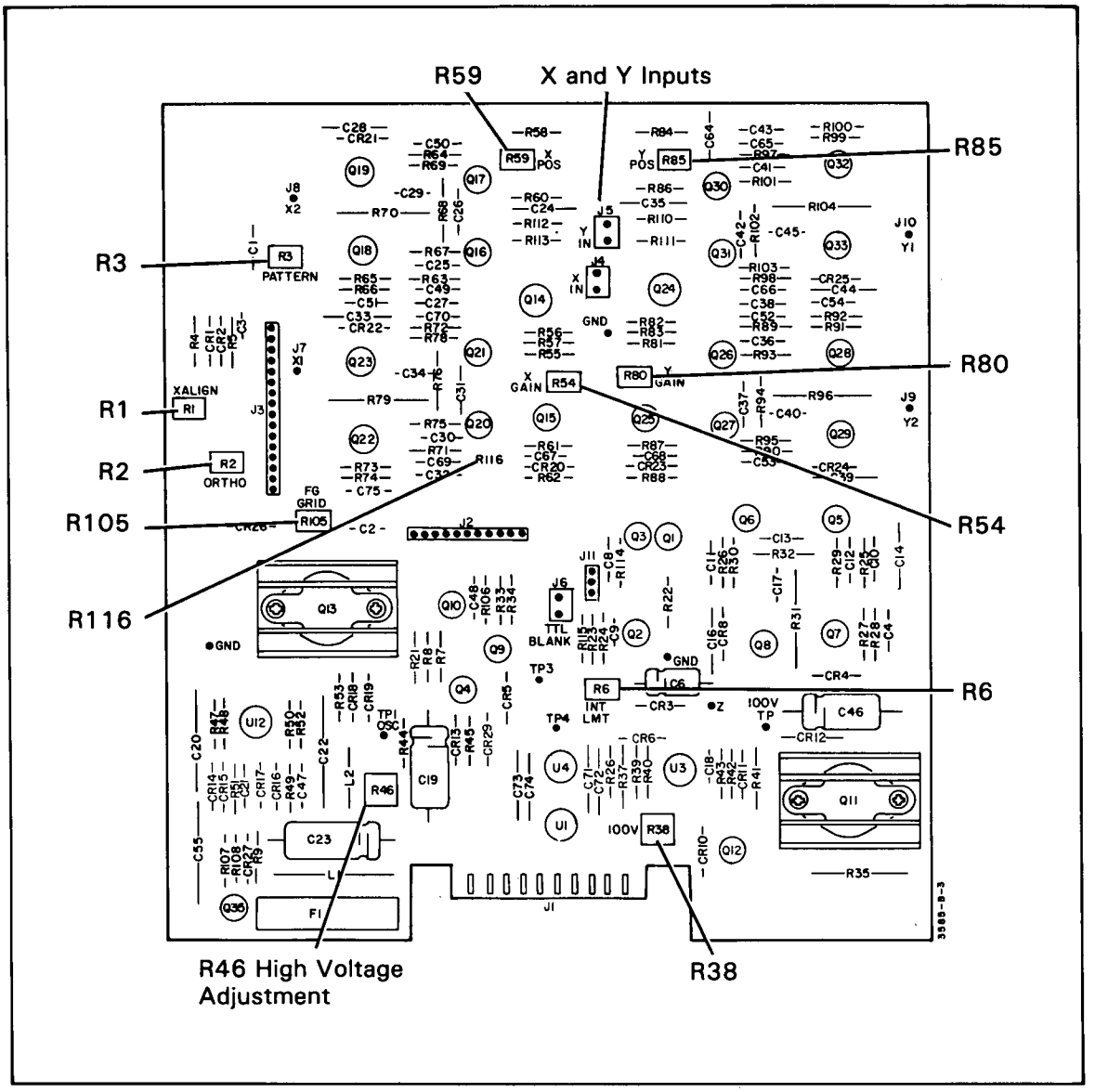


Figure 5-4. XYZ Board (A67)

f. Using a 10:1 probe, connect the oscilloscope to the "OSC" test point (A67TP1).

**WARNING**

*The voltages involved in the following measurements may cause serious injury or death. USE EXTREME CAUTION.*

g. Turn the 3585 power on. Turn the front panel intensity control fully C.W. Verify that A67TP1 measures approximately 26Vp-p centered +18V above ground potential.

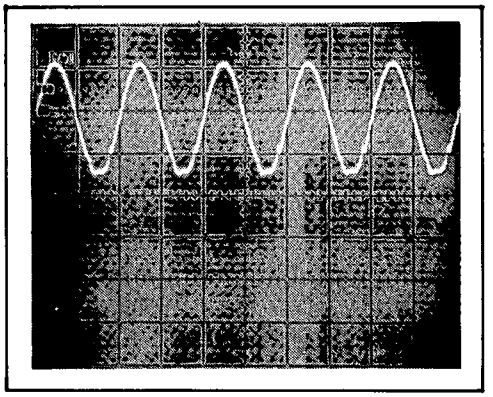

**Figure 5-5. High Voltage Oscillator Output**

h. Turn the front panel intensity control fully off and verify that the A67TP1 output is +18V DC.

i. Disconnect the scope probe.

j. Connect a DVM (200V range) to the 100V A67TP2. Adjust A67R38 for a reading of 100V ± 0.25V.

k. Turn the 3585 power off. Disconnect DVM.

**WARNING**

*The voltages present inside the high voltage power supply box can cause serious injury or death.* **Never** *place an uninsulated conductive tool or object inside this box.*

l. Set the intensity control to the "9 o'clock" position.

m. Remove the aluminum cover from high voltage section (see Figure 5-6 for screw locations) on the bottom side of the 3585.

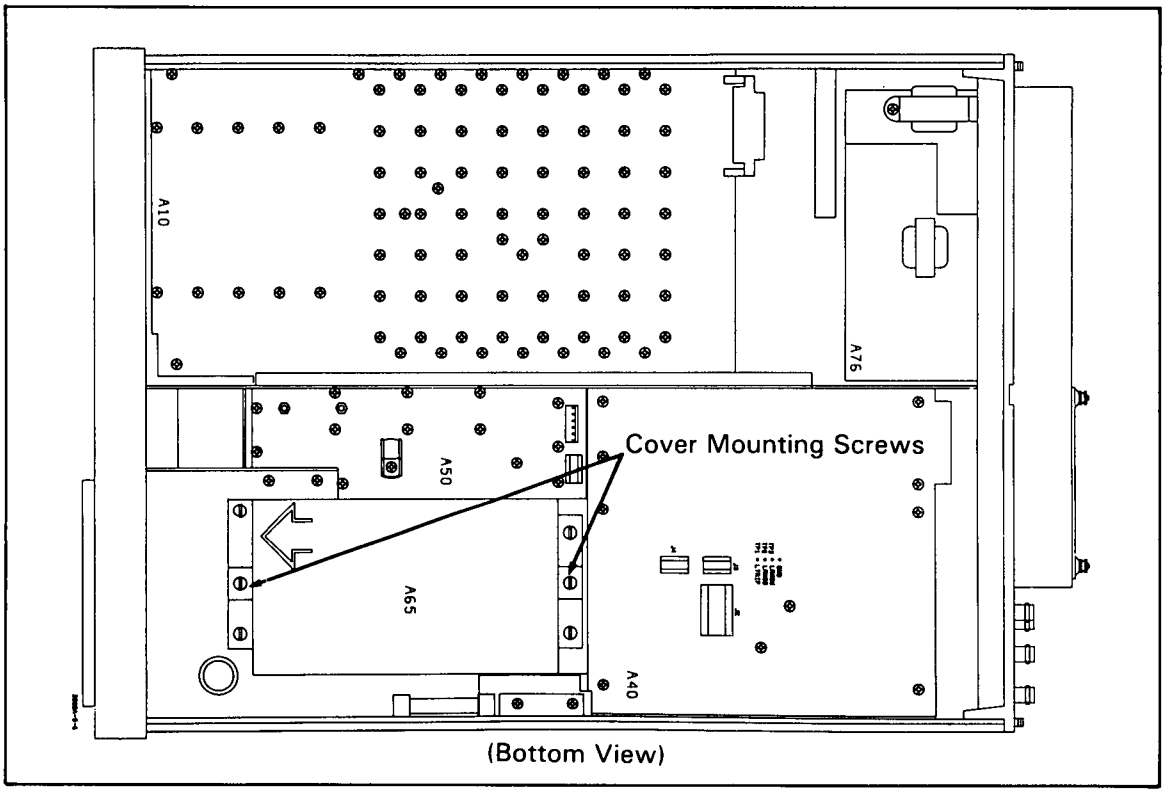


**Figure 5-6. High Voltage Cover Mounting Locations**

**WARNING**

*Extremely dangerous voltages can remain on the High Voltage board (A65) even when the instrument is turned off. Injury or death may result if an uninsulated tool or object is placed on the board.*

n. Connect the calibrated, high voltage probe to A65TP1 (plated through hole in PC board).

**WARNING**

*4kV will be measured when the instrument is turned on. USE EXTREME CAUTION to avoid serious injury or death.*

o. Turn the 3585 power on.

p. Adjust A67R46 for a voltage reading equal to the voltage marked on the high voltage sticker ±10V. See Figure 5-7 for the location of this sticker.

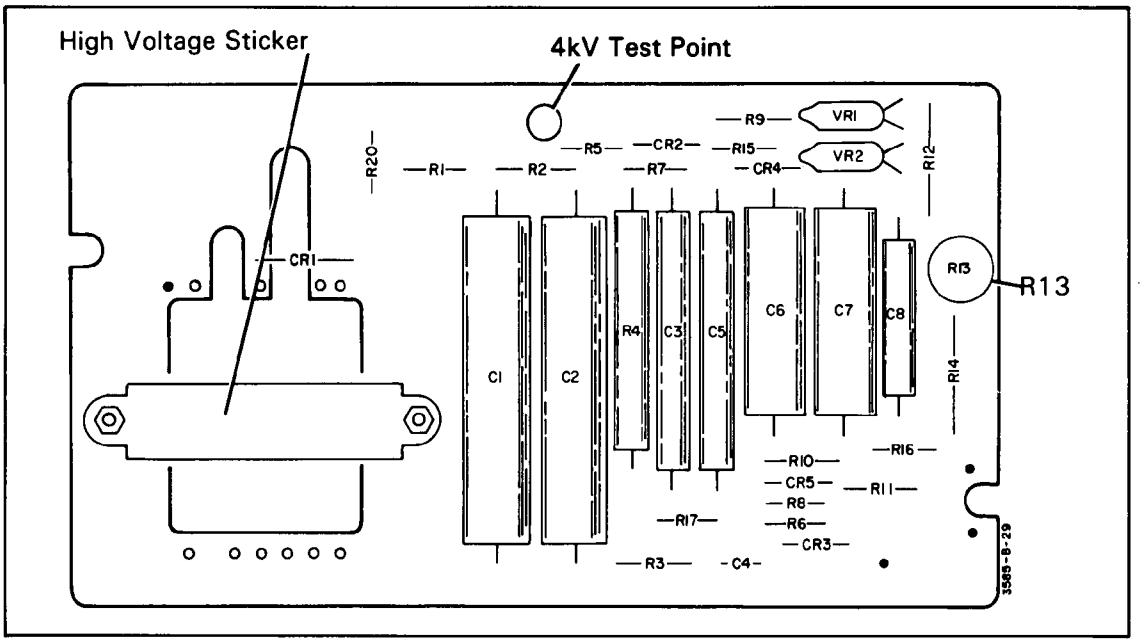


**Figure 5-7. High Voltage Board (A65)**

q. Remove the high voltage probe from the test point.

r. Using the front panel focus control, focus the 3585 CRT display. If the round dot on the instrument's CRT can be focused with the focus control between the 10 o'clock and 2 o'clock positions, proceed at step v, if not, continue with next step.

s. Set the focus control and astigmatism control to the 12 o'clock position.

t. Adjust the focus limit pot (A65R13) for the smallest, most symmetrical round dot on the 3585 CRT.

u. Turn the 3585 power off. Replace the high voltage cover and the instruments bottom cover. Set the 3585 back in a normal upright position.

v. Remove the shorts from the "Xin" and "Yin" inputs on the A67 board. Reconnect the proper cables to these inputs.

w. Set the oscilloscope for:

VERTICAL ..... 0.2V/pV
(DC Coupled)
HORIZONTAL ..... 0.05 $\mu$s/Div

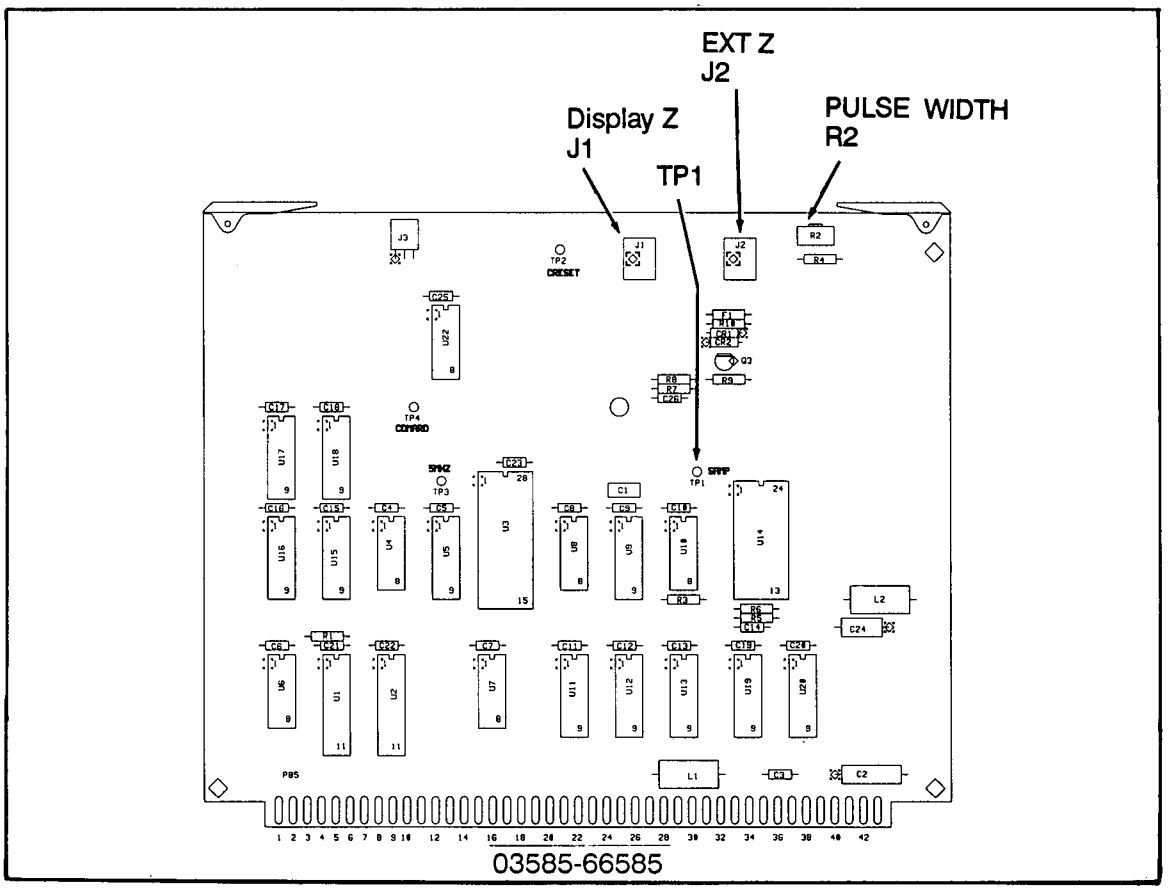


**Figure 5-8. Display Processor Board (A85)**

x. Connect a 10:1 scope probe to A85TP1 (See Figure 5-8) and adjust A85R2 for a pulse width of roughly 250 nsec between the centers of the rising and falling edges. (See Figure 5-9)

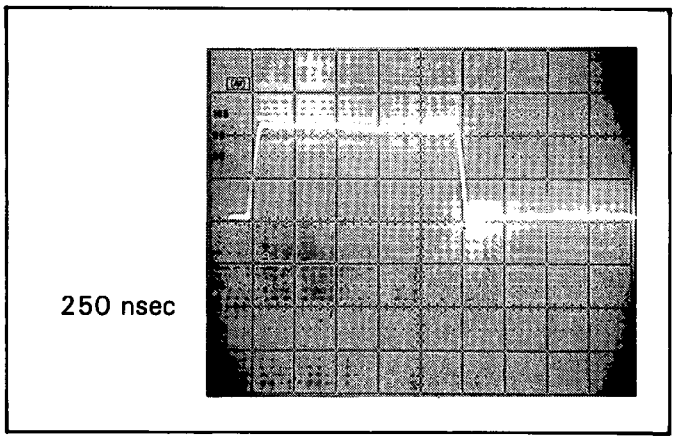


**Figure 5-9 Sample Pulse Generator Output**

y. Turn the front panel intensity control fully CW.

z. Move jumpers A67J11 to the normal position.

aa. Adjust A67R6 so that there are no extra dots on the screen (see Figure 5-10). Move jumper A67J11 to the test position. Display the test pattern by pressing shift 612 and instrument preset.

bb. Connect a DVM set for DC volts to A67TP6. Record the reading _____V.

cc. Connect the DVM to A67TP5. Record the reading _____V.

dd. Subtract the reading in step ff from those taken in step cc. The difference should be 8V or greater. If the difference is less than 8V, turn A67R6 slightly CCW and continue at step bb. (Typically the voltage difference will be 20V or greater.)

**NOTE**

*When A67R6 is adjusted properly, the display will blank out when the front panel intensity control is counterclockwise from the 10 o'clock position.*

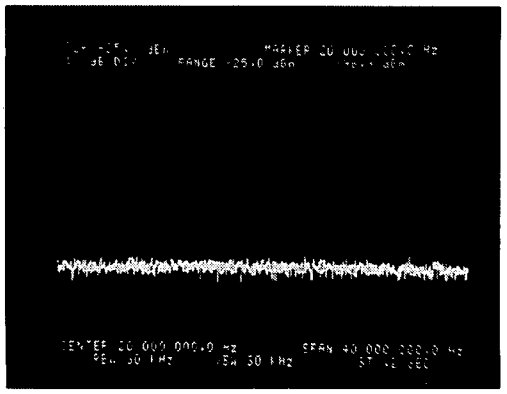

Intensity Limit Set Correctly

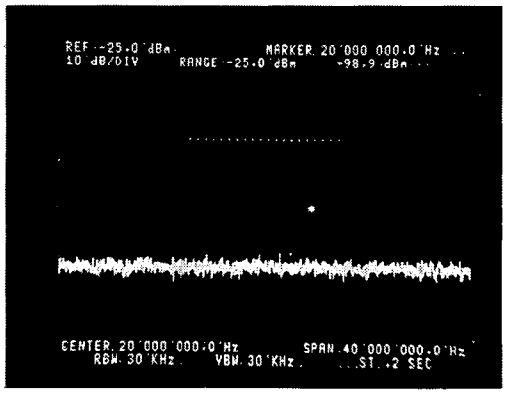


Intensity Limit Set Incorrectly

**Figure 5-10. Location Of Extra CRT Dots**

ee. Adjust the front panel intensity control so that the trace is just visible.

ff. Turn the front panel graticule control fully CW.

gg. Adjust A67R105 for uniform brightness across the CRT display by moving the bright bar off the screen to the left.

hh. Set the front panel intensity and graticule illumination controls fully clockwise. Adjust A67R116 until the CRT display begins to shrink.

ii. Turn the 3585 power off. Move test jumper A67J11 to the "N" position.

jj. Replace the A67 board. Replace the screws that hold the board to the chassis and the protective plastic cover over the board.

kk. This completes the CRT control and high voltage power supply adjustments.

## 5-11. CRT Graphics Adjustment

a. Place the XYZ board (A67) on a PC extender board. Screw the PC extender in place for stability. Leave all cables connected to A67.

b. Attach a DVM to A86TP8. Adjust A86R123 (5VADJ) for 5.00Vdc ± .005V. Disconnect DVM.

c. Press shift 612 and instrument preset to display the test pattern.

d. The display should now appear roughly similar to Figure 5-11 (a).

**NOTE**

*Refer to Figure 5-11 and 5-12 for pictures of the effect of each Graphic Adjustment.*

e. Adjust A67R59 (X position), A67R85 (Y position), A67R54 (X gain) and A67R80 (Y gain) so that the displayed graphics pattern is vertically and horizontally aligned with the CRT graticule. (Preliminary adjustment.) See Figure 5-4 for adjustment locations.

f. Adjust A67R3 (pattern) for the best vertical alignment.

g. Adjust A67R2 (orthoganality) for the best vertical alignment.

h. Adjust A67R1 (X align) for the best alignment along the X axis.

i. Repeat steps e thru h until alignment matches that of Figure 5-11 (a).

j. Observe the retrace line very carefully. If the line is wiggly as shown in Figure 5-11 (a), adjust A86C7 (comp) for a straight retrace line.

k. Move test jumper A86J1 to the "T" position.

l. Adjust A86R10 (LDOFS) so that any bumps on the retrace line are gone. A straight retrace line should be the resulting display.

m. Move test jumper A86J1 to the "N" position.

n. Adjust A86R33 (LDGAIN) for an overshoot condition (see Figure 5-11 (a)).

o. Adjust A86R33 so that the overshoot condition just disappears.

p. Turn trace B on and trace A off. Adjust A67R59 (X position) and A67R54 (X gain) so that the vertical lines coincide with the vertical etched graticule (see Figure 5-11 (a))

q. Adjust A67R85 (Y position) and A67R80 (Y gain) so that the CRT graticule lines cut through the upper and lower lines of the displayed pattern (see Figure 5-11(a)).

r. Press shift 611, and instrument preset to display the diagonal line test pattern (see Figure 5-12 (b)). Carefully inspect the short segments forming the diagonal line. If these segments have vertical tails, adjust A85R2 (sample pulse width) to remove the tails and repeat steps j through r.

s. Replace the A67 board. Replace the screws that hold the board to the chassis and protective plastic cover over the board.

**Properly Adjusted CRT Display**

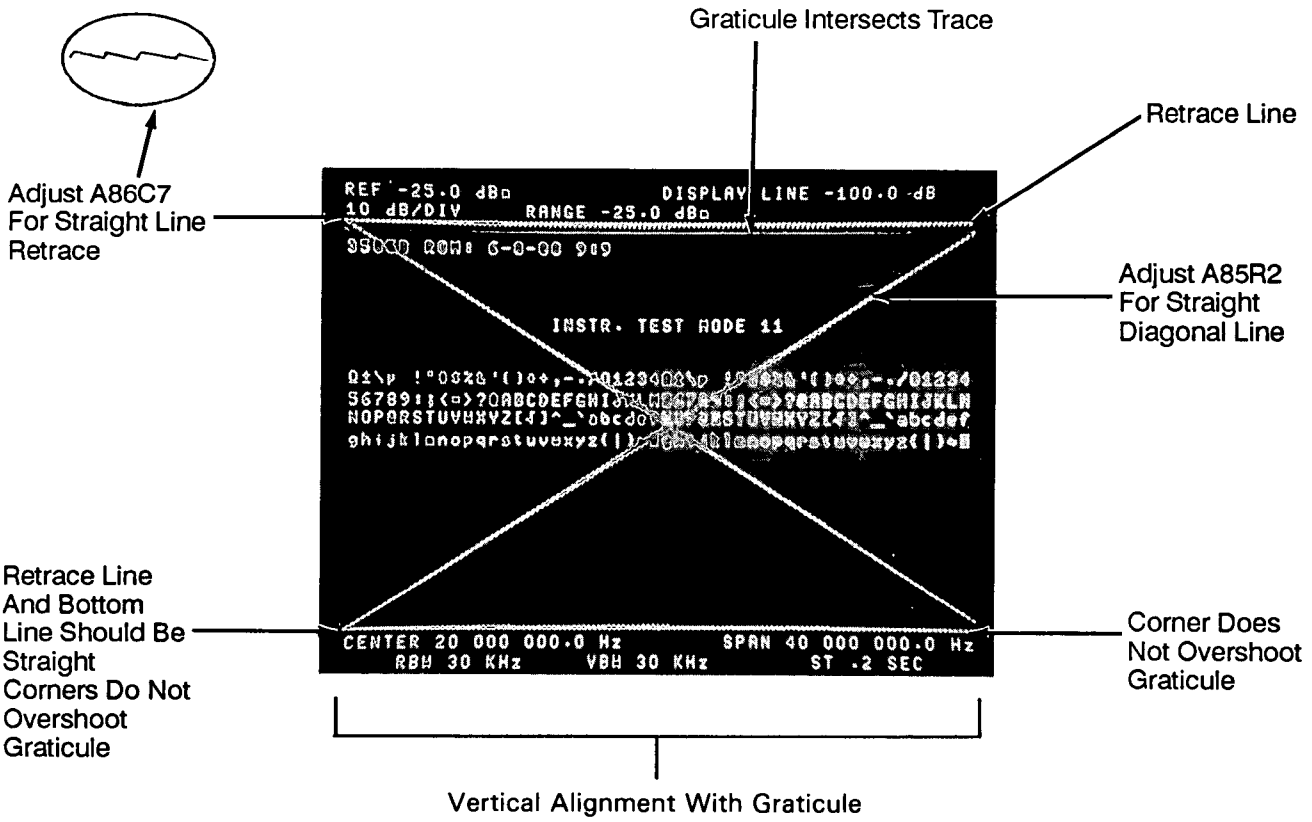


(a) CRT Test Pattern 1

(b) CRT Test Pattern 2

**Figure 5-11. CRT Test Pattern 1 & Pattern 2 .**

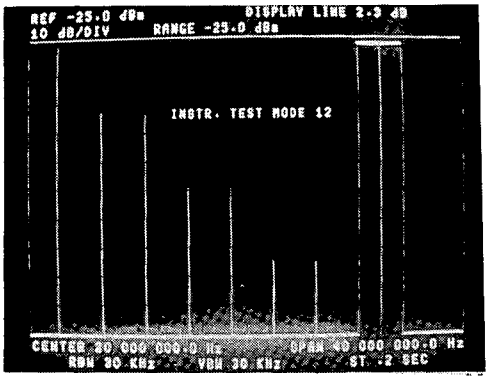


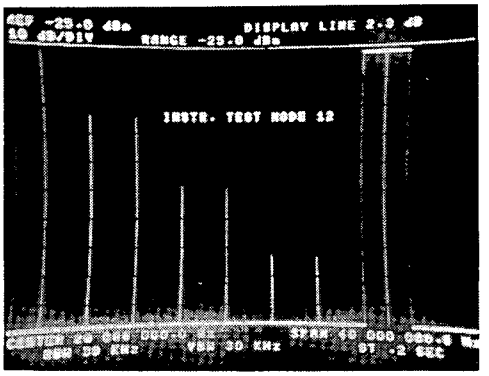


Pattern Control - A67R3

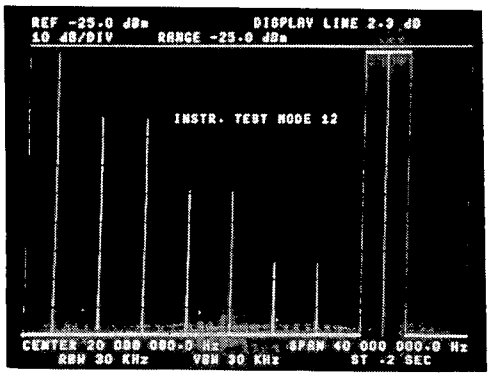


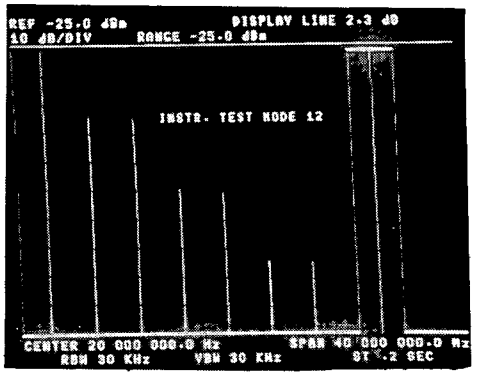


Orthogonality Control - A67R2

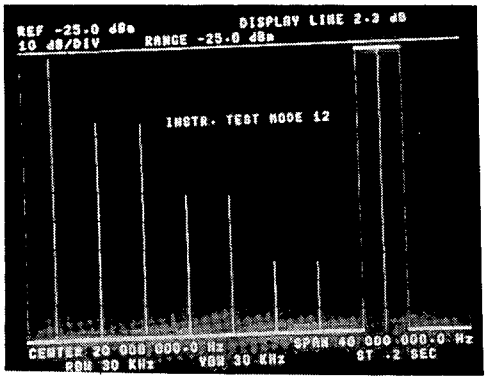


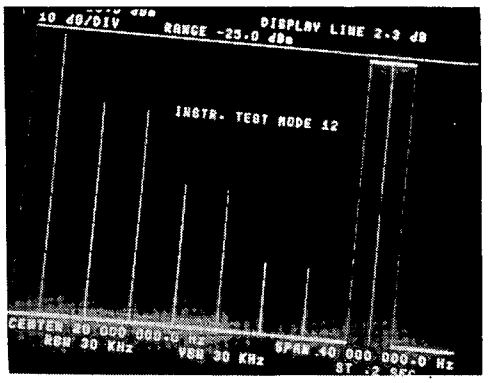


X Alignment - A67R1

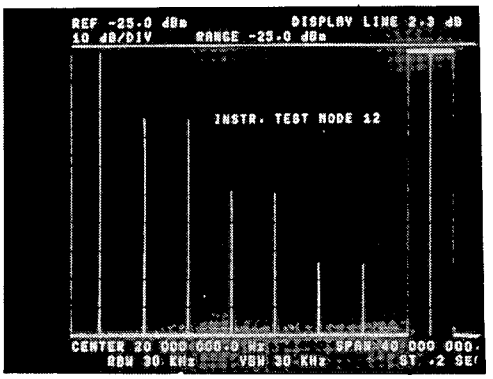


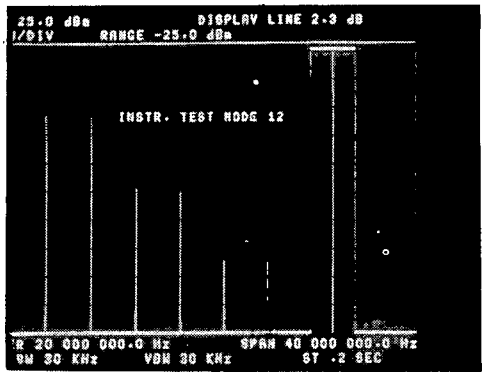


X Position - A67R59

Pattern Control - A67R3.

**Figure 5-12. Graphics Adjustments.**

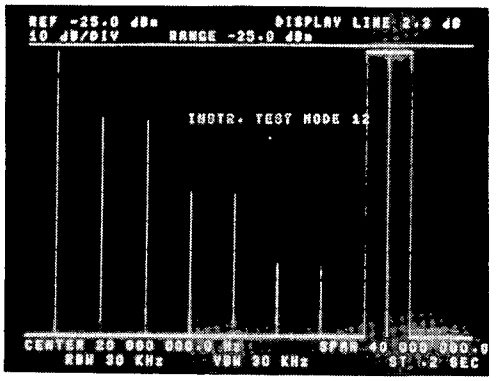


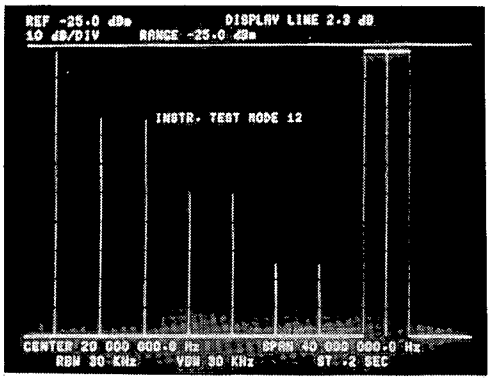


X Gain - A86R41

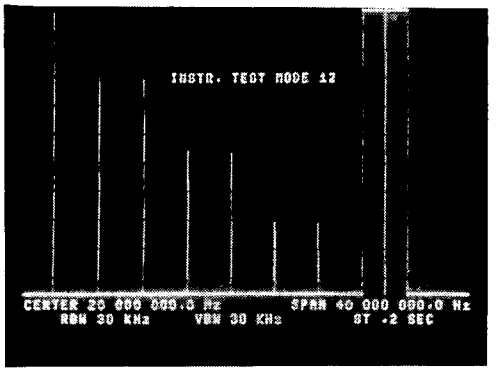


Y Position - A67R85

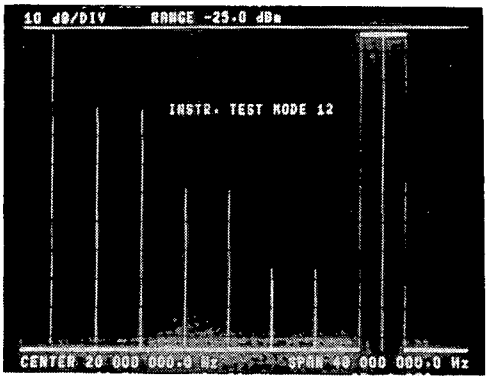


Y Gain - A67R80

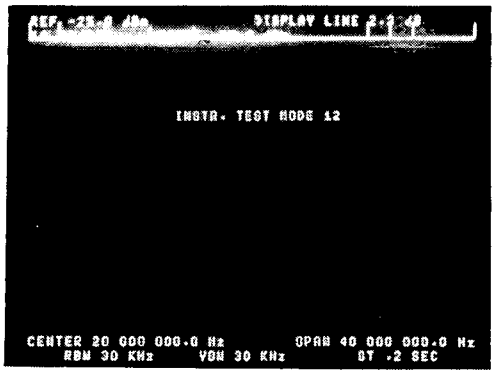


Overshoot ~A86R10

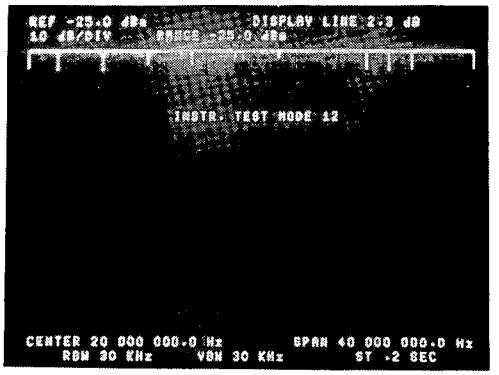


Undershoot - A86R10

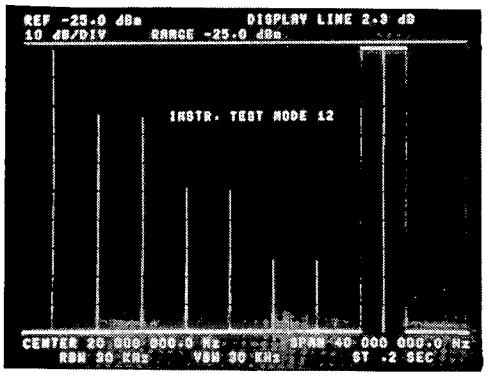


Line Drawer Gain - A64R62.

Proper Adjustment

Optimum Alignment

**Figure 5-12. Graphics Adjustments(continued).**

Overshoot Condition

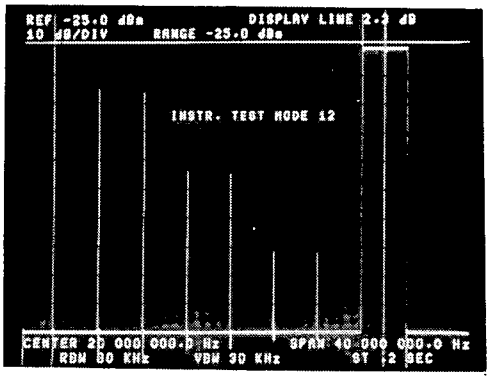


Line Drawer Gain - A86R36

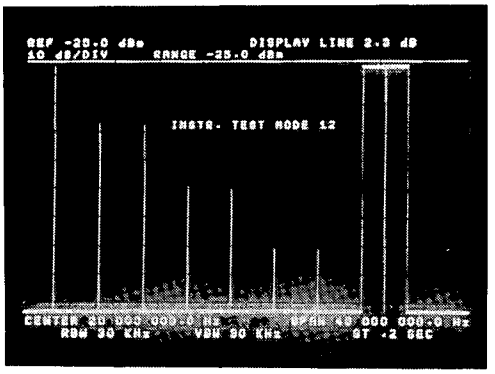


Y Gain - A67R80.

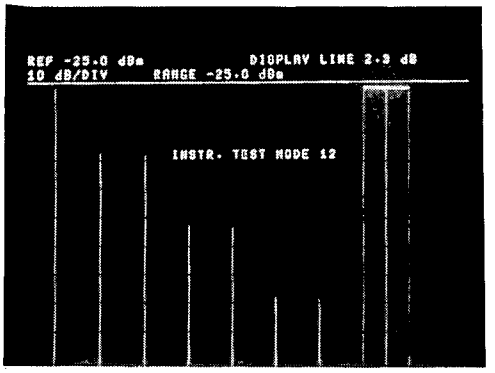


Y Position - A67R85.

Figure 5-12. Graphics Adjustments(continued).

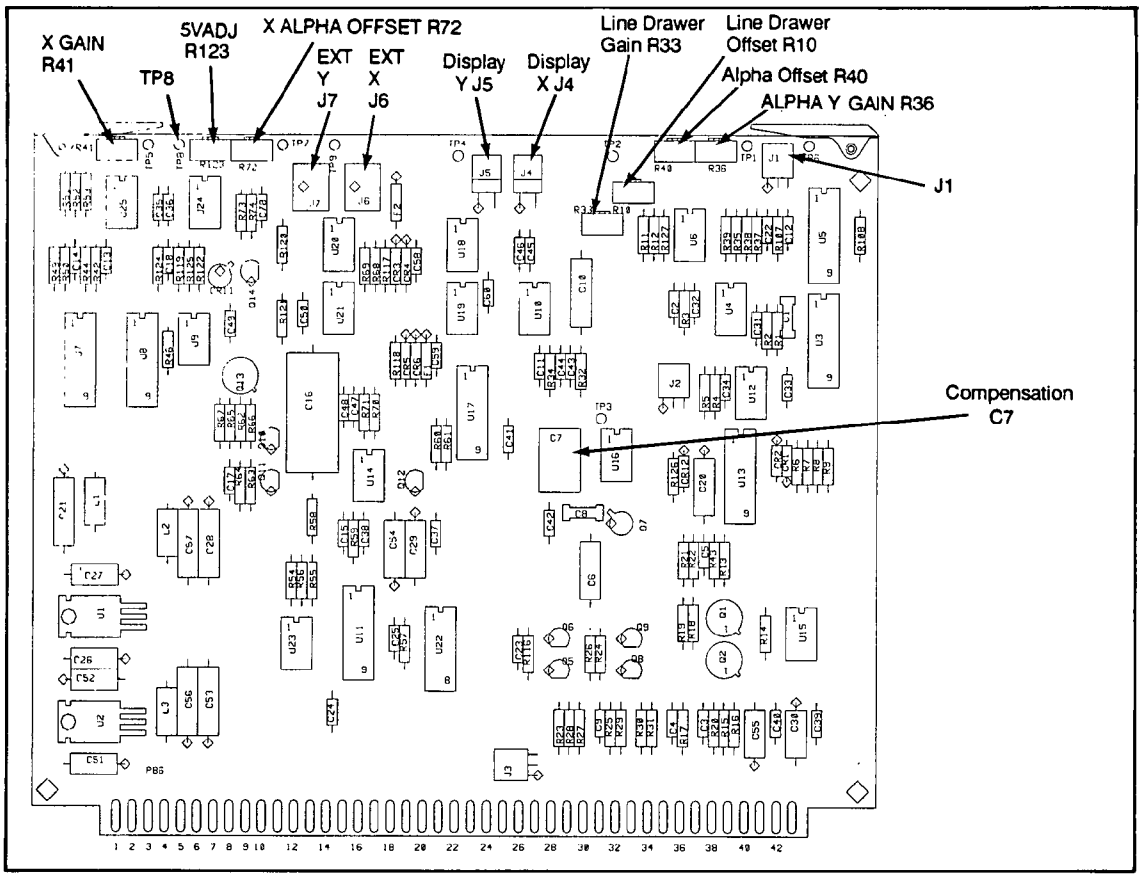


**Figure 5-13. Analog Display Driver Board (A86)**

## 5-12. CRT Alphanumeric Alignment

a. Press shift 612, and instrument preset to display the test pattern.

b. Press the key sequence shift and . (decimal point) to display the dotted graticule with the seven markers at the edges of the graphics frame.

**NOTE**

*Refer to Figure 5-14 for picture of the effect of Alphanumeric Adjustment.*

c. Adjust A86R40 (AOFS) and A86R36 (AYGAIN) so that the two upper markers (left and right) and the three bottom markers (left, center, and right) lie on the top and bottom horizontal etched graticule, respectively.

d. Adjust A86R72 (XAOFS) and A86R41 (XGAIN) so that the left three upper markers (top, center, and bottom) and the three right markers (top, center, and bottom) lie on the leftmost and rightmost etched horizontal etched graticule, respectively.

e. Check that the external X, Y, and Z drivers are operational by moving the X (A85J6), Y (A85J7), and Z (A86J1) cables to the external X (A85J4), Y (A85J5), Z (A86J2) connectors respectively and observe that the display image is reduced to one-quarter of the display.

f. Move the X, Y, and Z cables back to the A85J6, A85J7, and A86J1 connectors and replace the external X, Y, and Z drive BNC cables. This completes the graphics and alphanumeric adjustments.

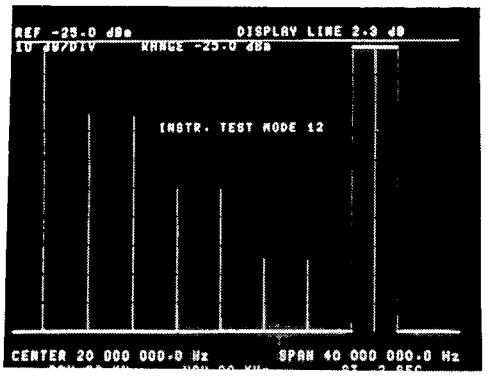


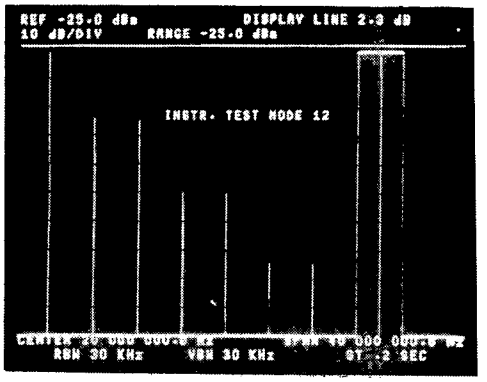


**Alpha Offset - A86R40**

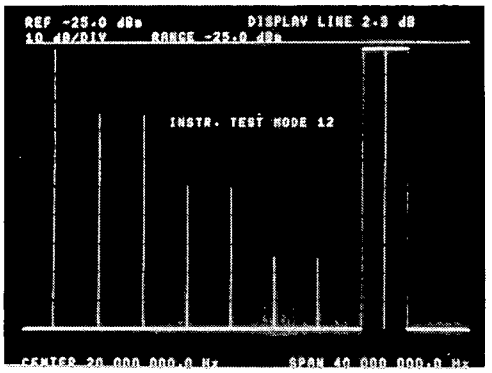


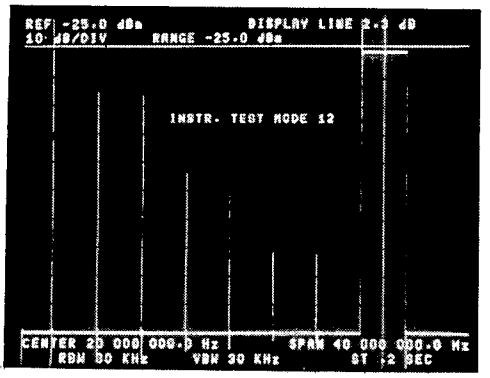


**Alpha Y - A86R36**

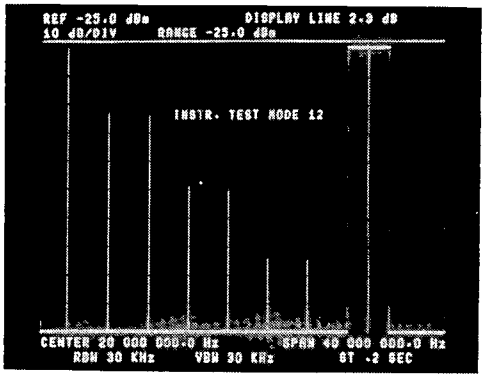


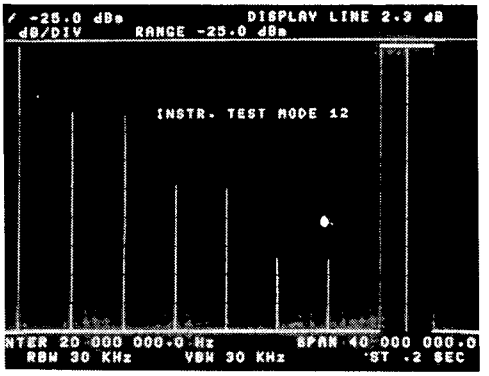


**X Gain - A67R54**

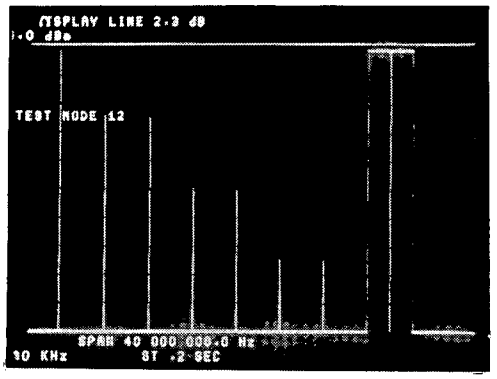


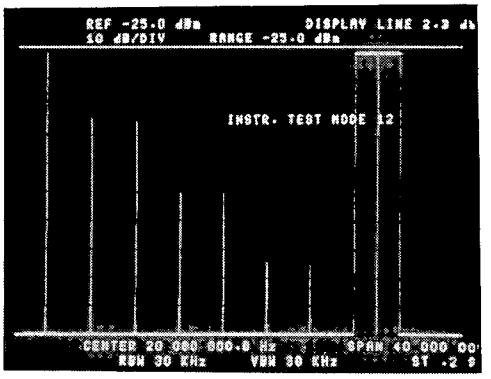


**X AOFS - A86R72**

**Figure 5-14. CRT Alphanumeric Adjustments.**

## 5-13. Fractional N Adjustments

a. Connect a DVM set for DC volts to A34TP5. Adjust A34R32 for 5.3Vdc ± 0.05V.

b. Verify that A34TP6 measures +15.0Vdc ± 0.8V and that A34TP8 measures -15.0Vdc ± 0.8V.

c. Disconnect the DVM.

d. Turn the 3585 power off. Place the A31 board on a PC board extender. Turn the 3585 power on.

e. Set the 3585 controls for:

SHIFT 601
INSTRUMENT PRESET
RES. BW..... 3kHz
RES. BW HOLD.....on
START FREQUENCY.....0.4MHz
STOP FREQUENCY.....1.65MHz
MANUAL ENTRY.....0.4MHz

f. Connect the DVM to A31TP1 and adjust A31L3 for +7.70Vdc ± 0.05V.

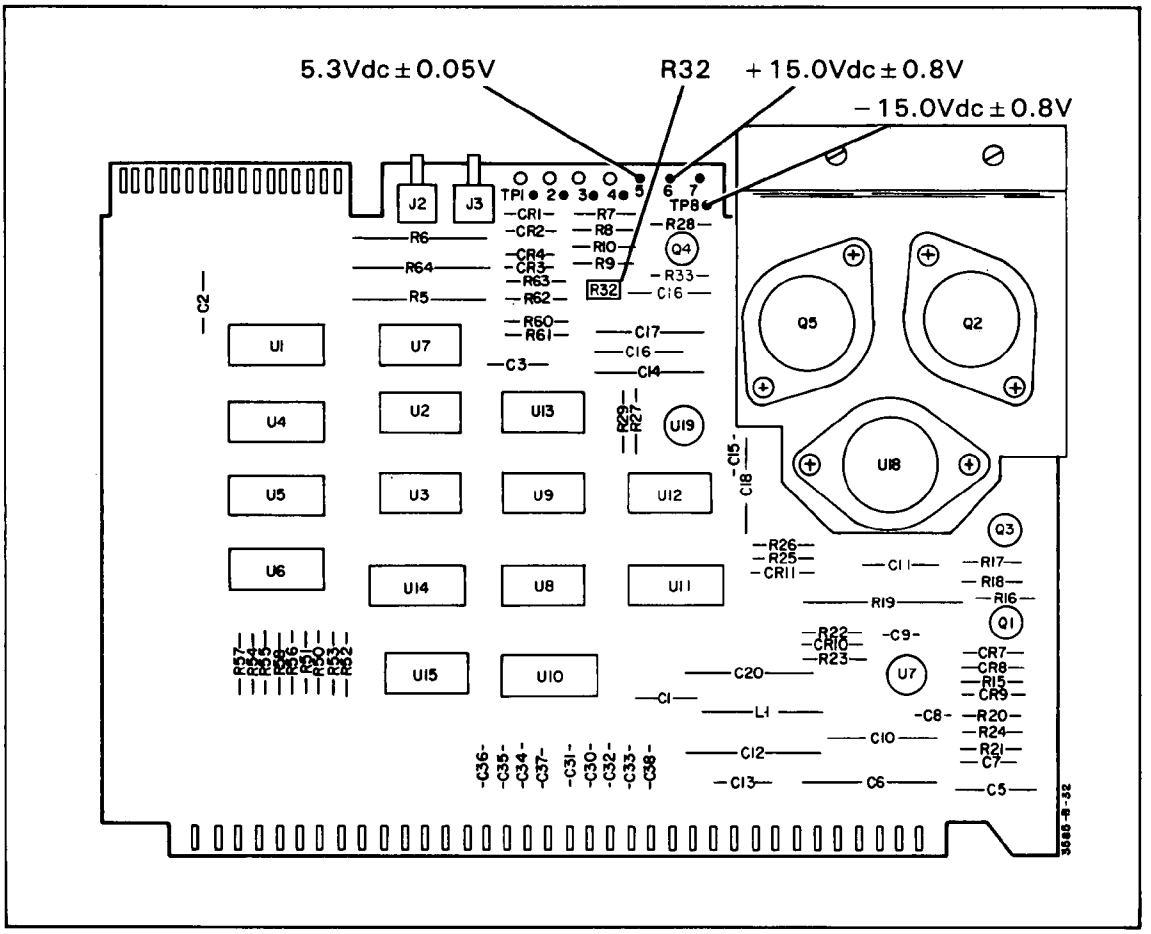


**Figure 5-15. LO Control Board (A34)**

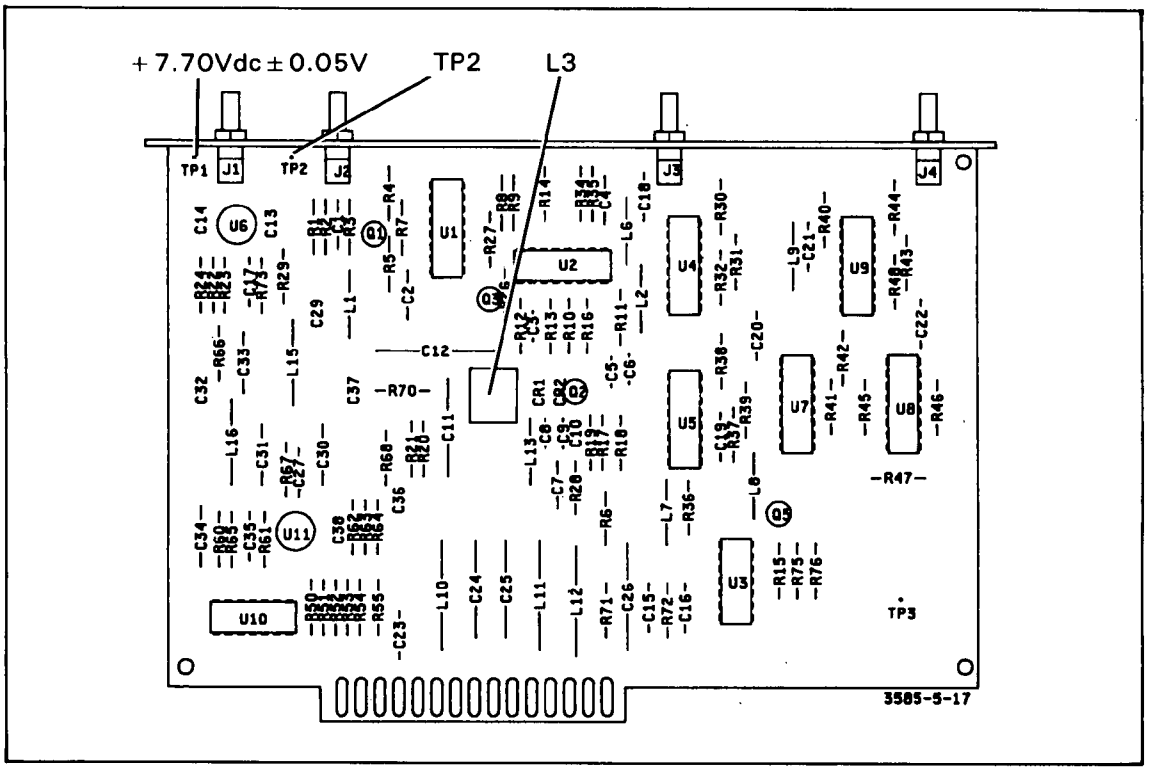


**Figure 5-16. Fractional N VTO (A31)**

g. Disconnect the DVM.

h. Turn the 3585 power off. Return the A31 board to its proper place in the card nest. Turn the 3585 power on.

i. Set the 3585 controls for:

SHIFT 601
INSTRUMENT PRESET
RES. BW.....3kHz
MANUAL ENTRY.....1MHz
CF STEP SIZE.....500Hz
MANUAL FREQUENCY.....⇧

j. Verify that the MANUAL frequency reads 1,000,500Hz on the CRT display.

k. Set your oscilloscope controls for:

Vertical Scale.....0.01V/Div. (AC coupled)
Horizontal Scale.....50μsec/Div.
Trigger.....external

l. Connect a 10:1 probe to the input of the scope. Connect the scope probe to A31TP2.

m. Connect a second 10:1 probe to the External Trigger input. Connect this probe to A33TP1.

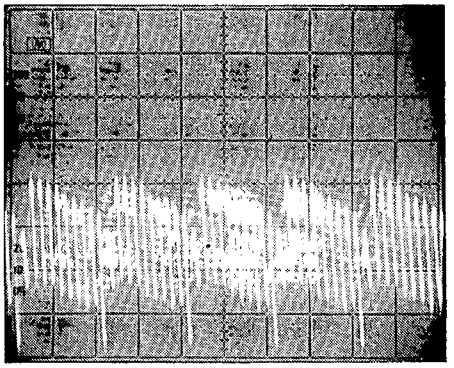

Incorrectly Adjusted API 1

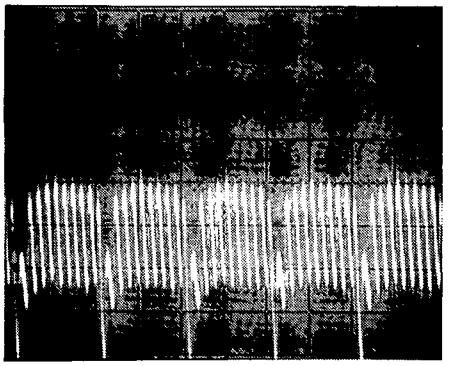

Correctly Adjusted API 1

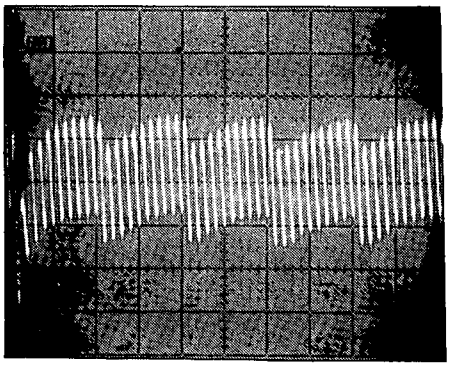

Incorrectly Adjusted API 2

**Figure 5-17. API Adjustment Waveforms**

n. Adjust A32R49 (API1, see Figure 5-45) for a minimum amount of ripple on the scope waveform. (See Figure 5-17.)

o. Set the 3585 controls for:

MANUAL FREQUENCY..... ⇩
CF STEP SIZE.....50Hz
MANUAL FREQUENCY..... ⇧

p. Verify that the MANUAL frequency now reads 1,000,050 Hz on the CRT display.

q. Adjust A32R56 (API2, see Figure 5-46) for a minimum amount of ripple on the scope waveform. (See Figure 5-17.)

r. Disconnect the oscilloscope connections. This completes the Fractional N adjustments.

## 5-14. L.O. Step Loop Adjustments

a. Turn the 3585 power off. Place the Step VTO board (A23) on a PC extender. Turn the power back on.

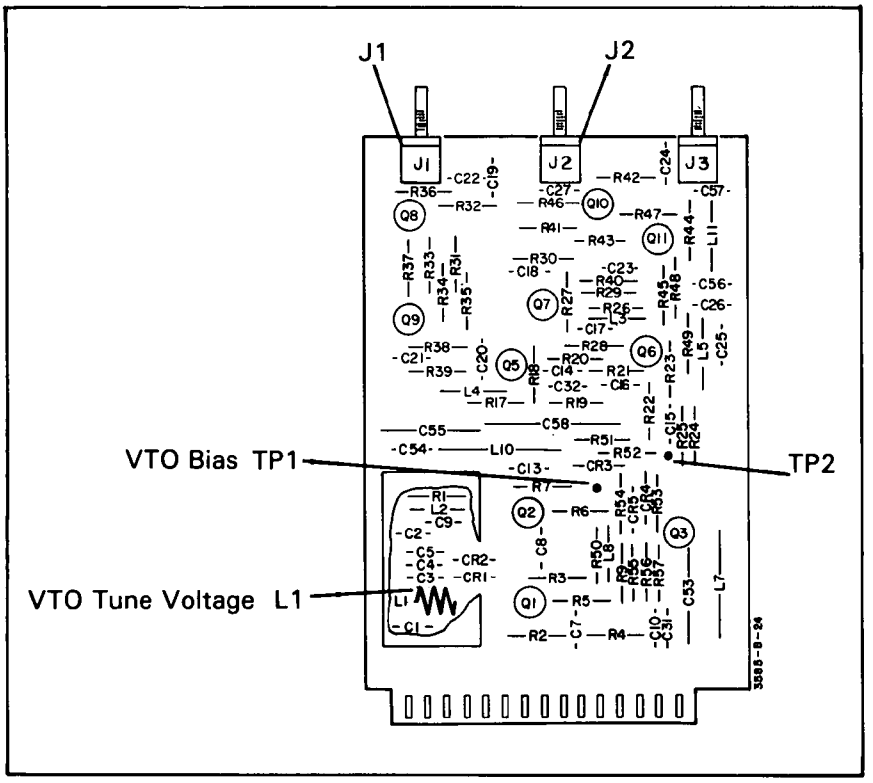


**Figure 5-18. Step Loop VTO Board (A23)**

**NOTE**

*Steps b. thru g. are functional checks. If a Spectrum Analyzer is not available these steps may be omitted.*

b. Set the 3585 controls as follows:

SHIFT 601
INSTRUMENT PRESET
CENTER FREQUENCY.....0Hz
FREQUENCY SPAN.....0Hz
CF STEP SIZE.....40MHz
RES. BW..... 3kHz
RES. BW HOLD.....ON

c. Disconnect the cable at A23J2. Connect a spectrum analyzer to A23J2 and verify that the signal (98MHz) level is approximately -6dBm or greater (typically -4dBm).

d. Remove the test spectrum analyzer from A23J2.

e. Disconnect the cable at A23J1 and connect it at A23J2.

f. Connect the spectrum analyzer to A23J1 and verify that the signal (≈98MHz) level is approximately -10dBm or greater (typically -7dBm).

g. Remove the spectrum analyzer from A23J1. Connect the proper cables to A23J1 and A23J2 (A23J1 to A26J2; A23J2 to A25J3)

h. Using a DVM, check the Bias voltage at A23TP1. This test point should read -4.6Vdc ± 0.2V.

i. Move the DVM to A23TP2. Squeeze or expand the oscillator coil (A23L1) to obtain a voltage of -2.0Vdc ± 0.1V.

j. Press "CENTER FREQUENCY. . . . ⌂ " on the 3585 and verify that the voltage at A23TP2 is ≥ +5.0Vdc.

k. Turn the 3585 power off. Remove the Step VTO (A23) board from its PC extender and return it to the card nest. Turn the 3585 power on.

l. Set the 3585 controls for:

SHIFT 601
INSTRUMENT PRESET
CENTER FREQUENCY.....0Hz
FREQUENCY SPAN.....0Hz
RES. BW.....3kHz
CF STEP SIZE.....40MHz
RES. BW HOLD.....ON

m. Connect a frequency counter to A23J2. The frequency reading should be 98MHz ± 10Hz.

n. Enter:

Center Frequency ⌂

o. The Frequency Counter reading should be 138MHz ± 10Hz.

p. Disconnect the cable at A23J1. If the frequency counter now reads 144MHz ± 0.5MHz, continue at step u.

q. If the frequency counter reading is not within the limits of 144MHz ± 0.5MHz, turn the 3585 power off. Place the Step Phase Detector board (A26) on a PC extender. Turn the 3585 power back on.

r. Set the 3585 controls for:

SHIFT 601
INSTRUMENT PRESET
CENTER FREQUENCY.....0Hz
FREQUENCY SPAN.....0Hz

s. With the cable at A23J1 still disconnected, adjust A26R75 so that the frequency counter reads 144MHz ± 0.5 MHz (see Figure 5-19).

t. Turn the 3585 power off. Replace the A26 board in the card nest and restore power to the 3585.

u. Verify that the "STEP" light on the A34 board goes on when the A23J1 cable is disconnected.

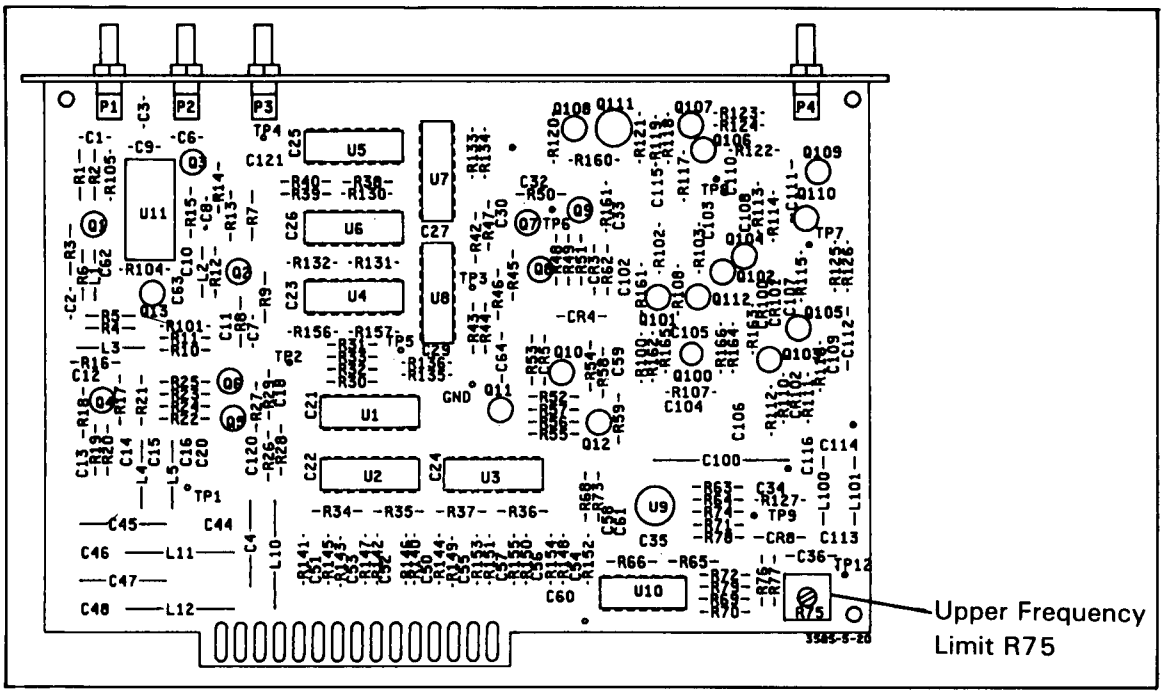


**Figure 5-19. Step Phase Detector Board (A26)**

v. Reconnect the proper cable to A23J1 (A23J1 to A26J2).

w. Verify that the "STEP" and "SUM" lights on the A34 board go on when the A26J3 cable is disconnected.

x. Reconnect the proper cable to A26J3 (A26J3 to A21J6).

y. Set the 3585 controls for:

INSTRUMENT PRESET
RES. BW..... 3kHz
SWEEP TIME.....36 sec.

z. Verify that the frequency counter is now changing in 1MHz increments from 98MHz to 138MHz.

aa. Reconnect the proper cable to A23J2 (A23J2 to A25J3). This completes the L.O. Step Loop Adjustments.

## 5-15. First L.O. VTO And Sum Loop Adjustments

a. Turn the 3585 power off. Place the First L.O. VTO (A22) on a PC extender board and turn the power back on.

b. Set the 3585 controls for:

RES. BW HOLD.....ON
CENTER FREQUENCY.....0Hz
FREQUENCY SPAN.....0Hz
CF STEP SIZE.....40MHz
RES. BW.....30kHz

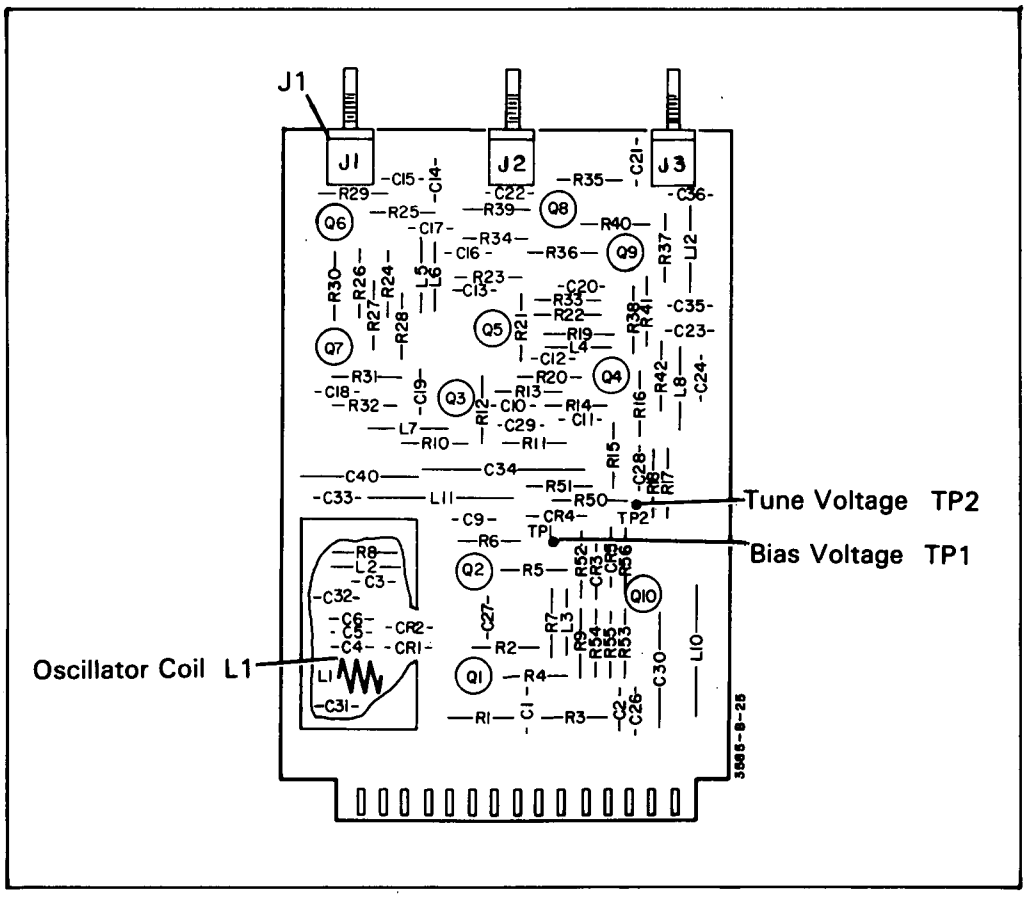


**Figure 5-20. First LO VTO Board (A22)**

c. Connect a frequency counter to A22J1.

d. Verify that the frequency counter now reads 100.35MHz.

e. Using a DVM, check that the voltage at A22TP1 measures -5.0Vdc ± 0.1V.

f. Adjust the voltage at A22TP2 by squeezing or expanding oscillator coil A22L1. The voltage reading should be -2.0Vdc ± 0.1V. Be sure to remove any tools from A22L1 before making your voltage reading.

g. Enter CENTER FREQUENCY . . . STEP ⌂ on the 3585 keyboard.

h. The frequency counter should now read 140.35MHz.

i. Turn the 3585 power off. Replace the A22 board in the card nest and turn the 3585 power back on.

j. Set the 3585 controls for:

RES. BW HOLD.....ON
CENTER FREQUENCY.....0Hz
FREQUENCY SPAN.....0Hz
CF STEP SIZE.....40MHz
RES. BW.....3kHz
MANUAL FREQUENCY.....0Hz

k. Adjust your oscilloscope controls for:

Vertical Scale . . . . . 0.01V/Div. (dc coupled)
Horizontal Scale . . . . . 0.5msec/Div. (internal trigger)
(Adjust scope for 0 volts dc at center of screen)

l. Connect the scope propel to A28TP4 (Σ Loop Error).

m. Adjust A27R2 (Offset, see Figure 5-~~46~~ 45) for an average value of 0 Vdc on the oscilloscope.

n. Press CENTER FREQUENCY . . . STEP ⇧ on the 3585 keyboard.

o. Adjust A27R11 (slope, see Figure 5-~~46~~ 45) for an average value of 0 Vdc on the oscilloscope.

p. Press CENTER FREQUENCY . . . STEP ⇩ Repeat steps m thru p until the voltage displayed on the oscilloscope at this time equals 0 Vdc ± 0.05V (half of one vertical division with a 10:1 probe).

q. Set the 3585A controls for:

START FREQUENCY . . . . . 0Hz
STOP FREQUENCY . . . . . 40MHz

r. Adjust A27R2 (offset) so that the waveform of the small band displayed on the scope varies less than 150mVpp.

s. Verify that the "FRN" and "SUM" lights on the A34 board are blinking.

t. Verify that the "SUM" light on the A34 board stays on when the cable connected to A23J2 is removed.

u. Re-connect the proper cable to A23J2 (A23J2 to A25J3).

v. This completes the First L.O. and Sum Loop Adjustments.

## 5-16. Video Filter And A/D Converter Adjustments.

a. Remove power to the 3585

b. Disconnect A89J10 to remove power to the Input/Conversion section ( see Figure 5-21).

c. Apply power to the 3585.

d. Set the 3585 controls for:

SHIFT 601
INSTRUMENT PRESET
RANGE . . . . . +30dBm

e. Using short clip leads, connect A16TP1 to ground. Adjust A16R21 for a 3585 marker reading of -69.9dBm. Now adjust A16R21 so that the marker reading is -70.0dBm, which will be just slightly below the -69.9dBm adjustment point.

f. Remove the clip lead from A16TP1.

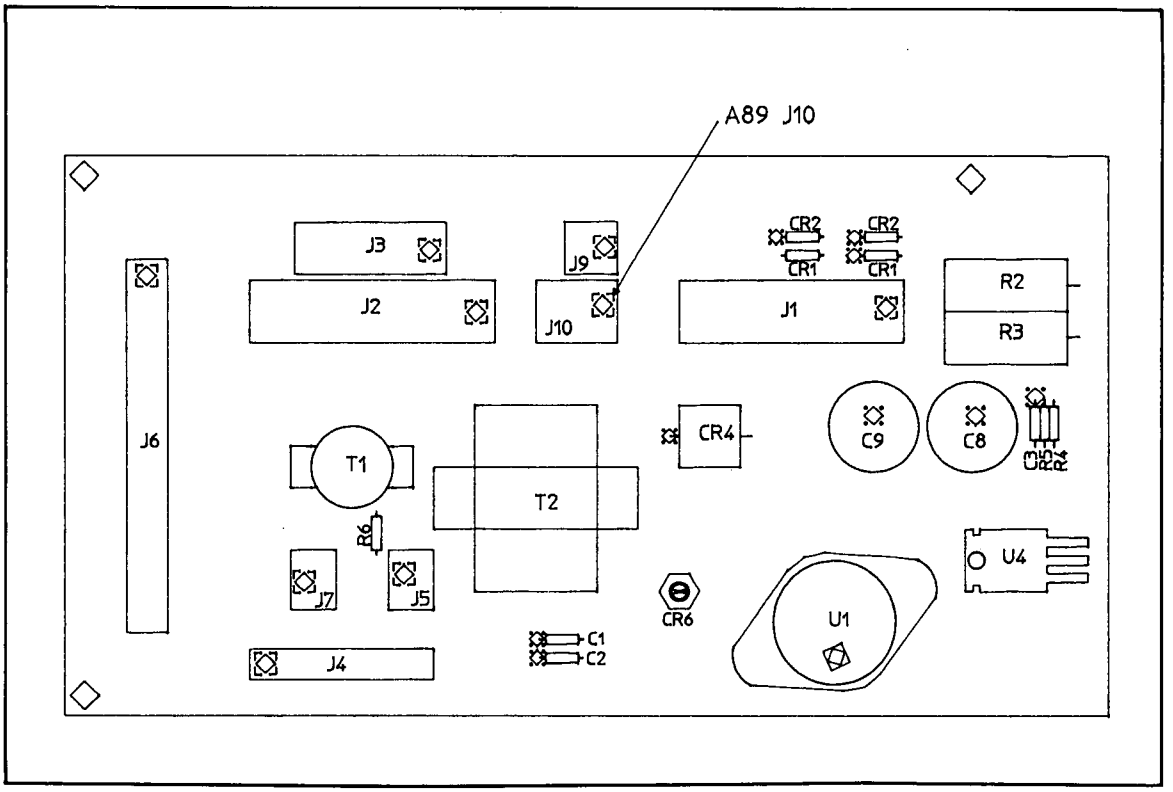


**Figure 5-21. Power Distribution (A89)**

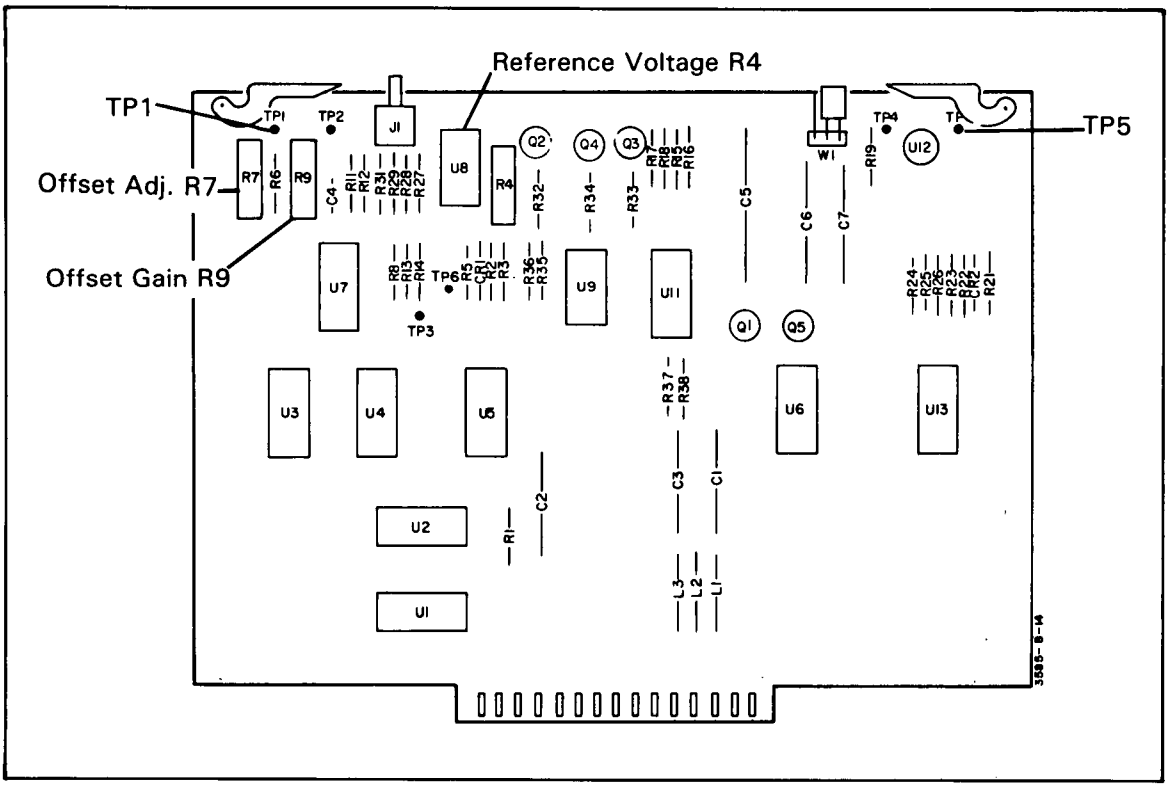


**Figure 5-22. Video Filter Board (A15)**

g. Connect A15TP1 to A15TP5 using a short clip lead.

h. Connect A DVM to A15TP1. Adjust A15R4 for a reading of 5.000V ± 0.001V.

i. Set the 3585 controls for:

dB/DIV ..... 1dB

j. Adjust A16R19 for a 3585 marker reading of +30.00dBm.

k. Remove the shorting clip between A15TP1 and A15TP5. This completes the Video Filter and A/D Converter Adjustments.

## 5-17. Log Amp And 30KHz Filter Adjustments

a. Turn the 3585 power off. Remove the metal covers on the A14 thru A19 boards.

b. Place the A14 board on a PC extender. Restore power to the 3585. Reconnect all cables.

c. Set the 3585 controls for:

SHIFT 601
INSTRUMENT PRESET
CENTER FREQUENCY ..... 350kHz
FREQUENCY SPAN ..... 100kHz
RES BW ..... 30kHz
dB/DIV ..... 1dB
MANUAL SWEEP ..... on

d. Terminate the Tracking Generator output with a 50Ω feedthrough termination. Using the BNC to Sealectro adapter cable, connect the termination output to A17J1.

e. Adjust the Tracking Generator Amplitude control so that the peak of the trace is near the top of the screen.

f. Turn the 3585 COUNTER on. Once the Counter reading has stabilized press the MKR → CF key. Turn the COUNTER function off. Press CONT sweep key.

g. Adjust A14L5 and L7 for a maximum marker amplitude reading. Continue adjusting these inductors until no further improvement can be obtained. Look for a symmetrical wave shape and maximum amplitude (while maintaining symmetry) when adjusting.

h. Disconnect the cable from the Tracking Generator to A17J1, and reconnect the green cable to A17J1.

i. Set the Synthesizer controls for:

FREQUENCY ..... 350kHz
AMPLITUDE ..... -25 dBm

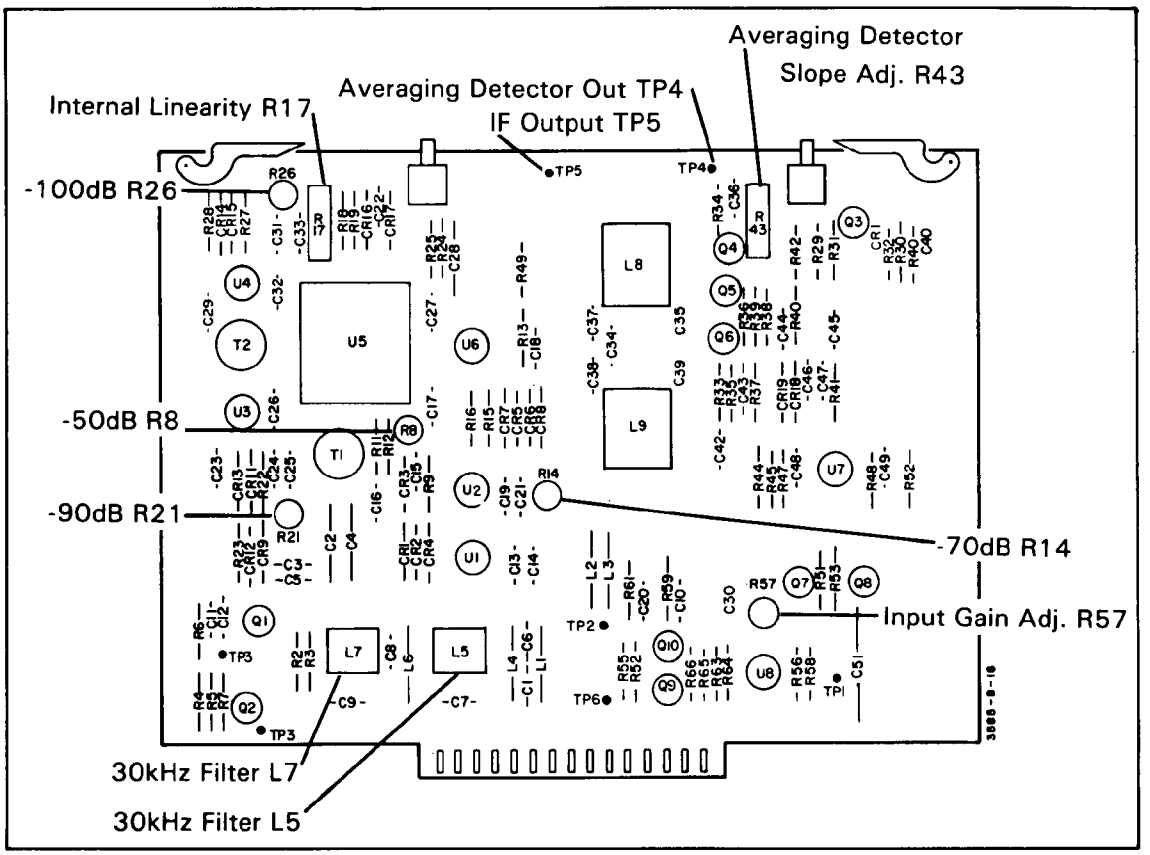


**Figure 5-23. Log Amp Board (A14)**

j. Set the 3585 controls for:

SHIFT 601
INSTRUMENT PRESET
CENTER FREQUENCY..... 350kHz
RANGE ..... −25dBm
AUTORANGE.....off
REFERENCE LEVEL.....−25dBm
dB/DIV ..... 5dB
MANUAL SWEEP.....on
CLEAR A

k. Connect the 50Ω output of the synthesizer to a 50Ω input of the 3585.

l. Using a 1:1 probe connect a high frequency ac voltmeter to A17TP2 and adjust A17R105 for a reading of 280mV RMS ± 3mV.

m. Again using the high frequency ac voltmeter, adjust A14R57 for a reading of 240mV RMS ± 2mV at A14TP5.

n. Disconnect the high frequency voltmeter.

o. Measure the dc voltage at A14TP4 and adjust A14R43 for a voltage reading of -5.7Vdc ± 0.3V.

p. Adjust A15R7 for a marker reading of −25.0dBm.

q. Set the 3585 controls for 1dB/DIV.

r. Again adjust A15R7 for a marker reading of −25.0 dBm.

### 5-18. Log Amp Slope Adjustment

a. Place the A14 board in the card nest.

**NOTE**

*The Log amp linearity is affected by the card nest shielding. Therefore, the procedure for adjusting the A14 board is as follows:*

1. *Take a reading according to the instructions.*
2. *Remove the A14 board (power should remain on).*
3. *Make a slight adjustment of the specified resistor. (R43,R17,R8,R14,R21,R26)*
4. *Replace the A14 board.*
5. *Repeat until the required reading is obtained.*

b. Set the 3585 controls for:

SHIFT 601
INSTRUMENT PRESET
CENTER FREQUENCY.....350kHz
RANGE ..... +30dBm
REFERENCE LEVEL..... +27dBm
dB/DIV ..... 5dB
MANUAL SWEEP.....on

Set the synthesizer controls for:

FREQUENCY .....350kHz
AMPLITUDE.....−7.5dBm.

c. Connect the 50Ω output of the Synthesizer to a 10dB/step attenuator. Connect the output of the attenuator to a 50Ω termination and the output of the 50Ω termination to A17J1 using the BNC to Sealectro adapter cable. Set the attenuator for ØdB of attenuation. Increase the amplitude of the synthesizer output until the Marker reading equals the Reference Level (=27dBm).

d. Set 3585 controls for:

OFFSET ..... on
ENTER OFFSET
dB/DIV .....5dB

e. Check that the marker amplitude now reads .00dB. If it does not read this value, again press ENTER OFFSET.

f. Set the attenuator for 30dB of attenuation.

g. Calculate the following:

(marker reading + 30) X 3 = correction adjustment

h. Set the attenuator for ØdB of attenuation.

i. Adjust A14R43 for the correction factor calculated in step g.

j. Set the 3585 controls for:

dB/DIV ..... 2dB
ENTER OFFSET

k. Set the attenuator for 10dB of attenuation.

l. Calculate the following:

−(marker reading + 10) x 10 = correction factor

m. Set the attenuator for ØdB of attenuation.

n. Adjust A14R17 for the correction factor calculated in step l.

o. Repeat steps e thru n until the 3585 marker amplitude readings are -30dB ± 0.05dB when the attenuator is set for 30dB and -10dB ± 0.02dB when the attenuator is set for 10dB.

p. Set the attenuator for Ø dB of attenuation.

q. Turn the 3585 OFFSET function off.

**Table 5-3. Log Amplifier Adjustments**

| (A) Variable Attenuator | (B) Correction Factor* | (C) Ideal Reading | (D) Correct Reading | (E) Adjustment Tolerance |
|---|---|---|---|---|
| -30dB | _____ | -30.00dB | _____ dB | ±0.05 |
| -10dB | _____ | -10.00dB | _____ dB | ±0.02 |
| 0dB** | _____ | -50.0dB | _____ dB | ±0.1 |
| -20dB** | _____ | -70.0dB | _____ dB | ±0.1 |
| -40dB** | _____ | -90.0dB | _____ dB | ±0.1 |
| -50dB** | _____ | -100.0dB | _____ dB | ±0.5 |

*Correction factor must be obtained from attenuator calibration data.

**For these adjustments, the synthesizer amplitude is lowered to give the proper input level.

r. Enter: 1dB/Div.

s. Adjust A15R7 for a marker amplitude reading of +27.00dBm.

t. When adjusting the -50, -70, -90 and -100dB points on the Log Linearity curve it is important to have the A14 board in the card nest. To do the required adjustments simply remove the A14 board, adjust the variable resistor and replace the board in the card nest to check the results of the adjustment.

u. Set the 3585 controls for:

RBW.....3Hz
VIDEO BW.....1Hz
dB/DIV.....10dB
OFFSET.....on
ENTER OFFSET

v. Verify that the marker amplitude reading is 0dB.

w. Set the Synthesizer controls for:

AMPLITUDE INCREMENT.....50dB
AMPLITUDE.....⇩

x. Adjust A14R8 for a 3585 marker amplitude reading of -50.0dB ± 0.1dB. Turn CCW for increase.

y. Set the external attenuator for 20dB of attenuation.

z. Adjust A14R14 for a 3585 marker amplitude reading of -70.0dB ± 0.1dB. Turn CCW for decrease.

aa. Set the external attenuator for 40dB of attenuation.

bb. Adjust A14R21 for a 3585 marker amplitude reading of -90.0dB ± 0.1dB. Turn CCW for decrease.

cc. Set the external attenuator for 50dB of attenuation.

dd. Adjust A14R26 for a 3585 marker amplitude reading of -100.0dB ± 0.1dB. This will be *just slightly* below the -99.9dB point.

ee. Set the external attenuator for Ø dB of attenuation. Enter AMPLITUDE . . .STEP UP on the frequency Synthesizer.

ff. Verify that the marker amplitude reading is 0.0dB ± 0.1dB. If it is outside of the stated limits, press ENTER OFFSET and continue at step v.

gg. Verify that the voltage at A14TP4 measures -5.7Vdc ± 0.1V.

## 5-19. Reference Level DC Offset Adjustment

a. Set the 3585 controls for:

SHIFT 601
INSTRUMENT PRESET
CENTER FREQUENCY.....350kHz
RANGE ..... +30dBm
REFERENCE LEVEL..... +27dBm
dB/DIV ..... 5dB
MANUAL SWEEP.....on

Set the synthesizer controls for:

FREQUENCY .....350kHz
AMPLITUDE ..... −20.0dBm

b. Connect the 50Ω output of the Synthesizer to A17J1 using a BNC to Sealectro adapter cable. Increase the amplitude of the synthesizer output until the Marker reading equals the Reference Level (=27dBm).

c. Using short clip leads, short A14TP4 to ground.

d. Set the 3585 controls for:

SHIFT 601
INSTRUMENT PRESENT
CENTER FREQUENCY.....350kHz
RANGE ..... +30dBm
REFERENCE LEVEL..... −25dBm
SAVE 1
REFERENCE LEVEL.....−24.9Bm
SAVE 2

e. Using a DVM measure the dc voltage at A15TP5. Record the voltage reading: ____V.

f. Enter RECALL 1 on the 3585 keyboard.

g. Measure the dc voltage at A15TP5. Record the reading: ____V.

h. Subtract the first reading from the second reading. The difference should be 195mV. If the difference voltage is not 195mV, set the 3585 controls for:

RECALL 2

Adjust A15R9 slightly (CW increases difference).

i. Repeat steps e thru h until the difference voltage reads 195mV.

j. Remove the shorting lead from A14TP4 to ground.

k. Set the 3585 controls for:

SHIFT 601
INSTRUMENT PRESET
RANGE ..... +30dBm
REFERENCE LEVEL..... +27dBm
dB/DIV ..... 1dB
MANUAL ENTRY.....350kHz

l. Adjust A15R7 for a marker amplitude reading of +27.00dBm.

m. Replace the metal cover on the A14 thru A16 boards and tighten down the associated screws.

n. Remove power from the 3585 and re-connect the Input/Conversion power connector to A86J10.

## 5-20. I.F. Filter Adjustments

**NOTE**

*Use a non-metallic adjusting tool for all I.F. Filter adjustments.*

a. Turn the 3585 power off. Remove the aluminum cover on the A17, A18 and A19 boards.

b. Restore power to the 3585.

**NOTE**

*The component locators for the IF boards (A17-A19) are contained on* Figure 5-33.

c. Set the synthesizer for a Frequency of 350kHz and an Amplitude of -2.0dBm.

d. Remove the cable from the A17J1 connector.

e. Set the 3585 controls for:

SHIFT 619
INSTRUMENT PRESET
CENTER FREQUENCY.....350kHz
CF STEP SIZE.....1.3Hz
RES. BW.....3Hz
dB/DIV ..... 1dB
MANUAL SWEEP.....on
CLEAR A

f. Connect the output of the synthesizer to a 50Ω termination. Connect the output of the termination to the A17J1 connector. Adjust synthesizer output level until it is ≈ 5.6 dBm below 3585 Reference Level.

g. Adjust A19C39 for a maximum marker amplitude reading. Adjust the REF LEVEL as necessary to keep the marker within the graticule area. (See Figure 5-24.)

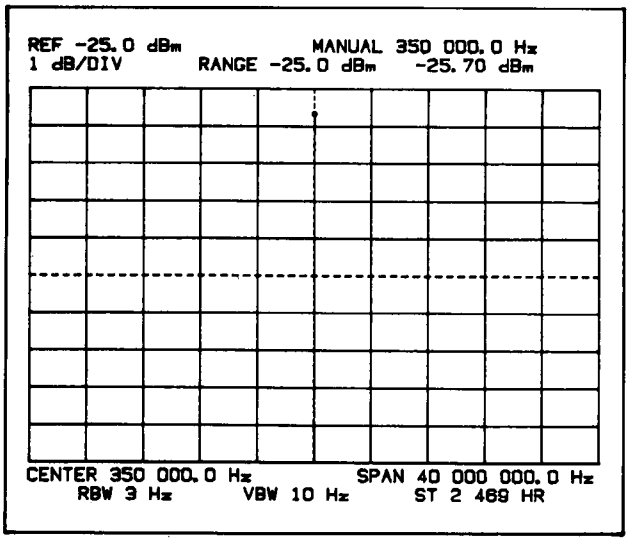


**Figure 5-24. IF Adjustment Display #l**

h. Press the 3585 STORE A → B key.

i. Disconnect the synthesizer.

j. Connect the output of the Tracking Generator to a 50Ω termination. Connect the output of the 50Ω termination to the A17J1 connector. Set Tracking Generator output control fully CCW.

k. Move the test jumper A19J1 to the "T" postion.

l. Set the 3585 controls for:

FREQUENCY SPAN.....50kHz
RES BW.....300Hz
SWEEP.....cont
dB/DIV.....10dB
B TRACE.....OFF

m. Press PEAK SEARCH to move the marker to the peak of the trace, then press MKR → CF.

n. Adjust A19C41 so that the displayed trace is symmetrical about the marker.

o. Using the STEP keys, start narrowing the FREQUENCY SPAN. As you narrow the span the peak of the response will move to the left or the right. When this occurs, press PEAK SEARCH to move the marker to the peak of the response, then press MKR → CF. Continue narrowing the span until a frequency span of 10Hz is reached.

p. Set the 3585 controls for:

dB/DIV.....1dB
SWEEP TIME.....9.6sec
B Trace.....on

q. Move the marker to the most positive point on the trace and press MKR → CF.

r. Adjust the Tracking Generator amplitude control so that the peak of the A trace and the peak of the B trace are of equal amplitude.(This is easiest to do in the manual mode.)

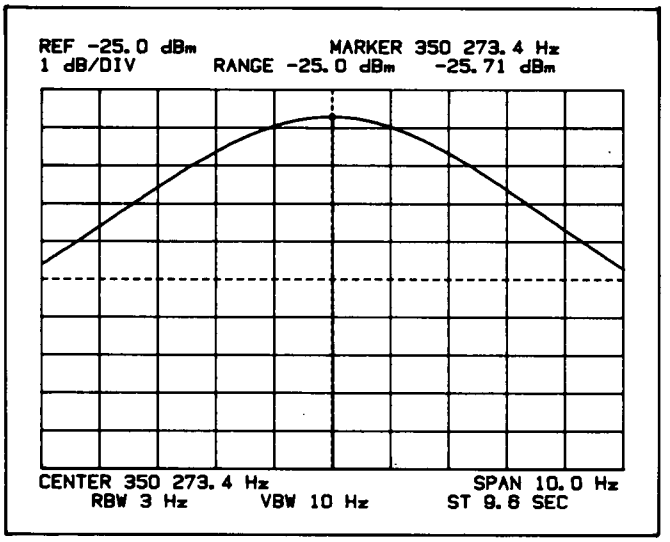


**Figure 5-25. IF Adjustment Display #2**

s. Repeat the previous two steps until the A trace is symmetrical and equal to the amplitude of the B trace. (See Figure 5-25.)

t. Press the STORE A → B key of the 3585. The stored trace will now serve as the reference trace for the rest of the I.F. Filter adjustments.

## 5-21. Fifth Crystal Stage Adjustment

a. DO NOT TURN THE 3585 POWER OFF. Remove the PC extender and place the A19 board in the card nest.

b. Make the following keyboard entries on the 3585:

RES BW.....300Hz
RES BW HOLD.....on
FREQUENCY SPAN.....1kHz

c. Press the REF LVL key of the Marker/Continuous Entry group. Using the Continuous Entry control, adjust the reference level until the peak of the A trace is equal in amplitude to the peak of the B trace. Do not change the reference level after this step.

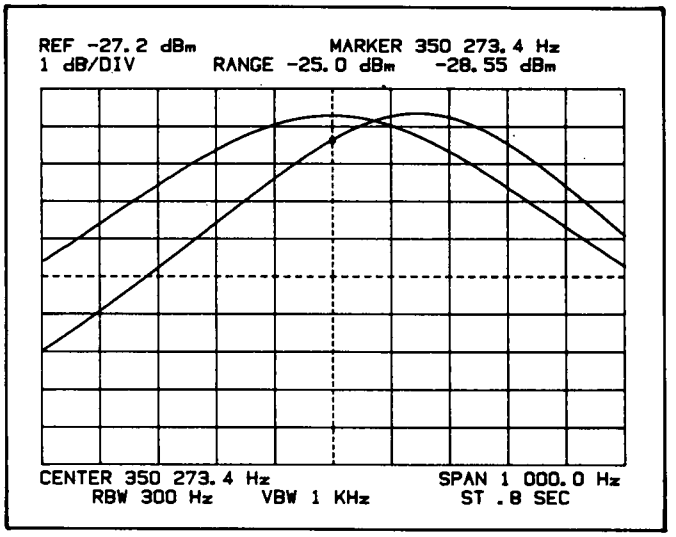


**Figure 5-26. Off-Center IF Stage**

d. Both the A and B traces should now be displayed as in Figure 5-27.

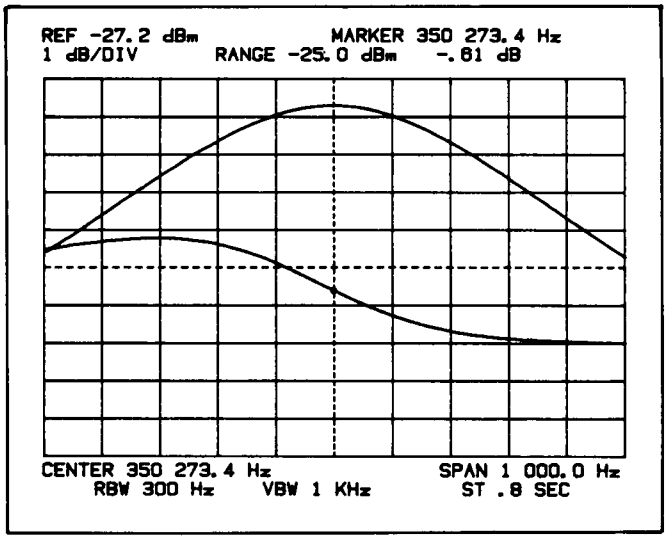


**Figure 5-27. Off-Center IF Stage, A-B Mode**

e. Set the 3585 controls for:

MARKER.....on
A-B.....on
SWEEP.....cont
dB/DIV.....1dB

f. Adjust A19C67 so that the A trace approximates a straight, horizontal line.

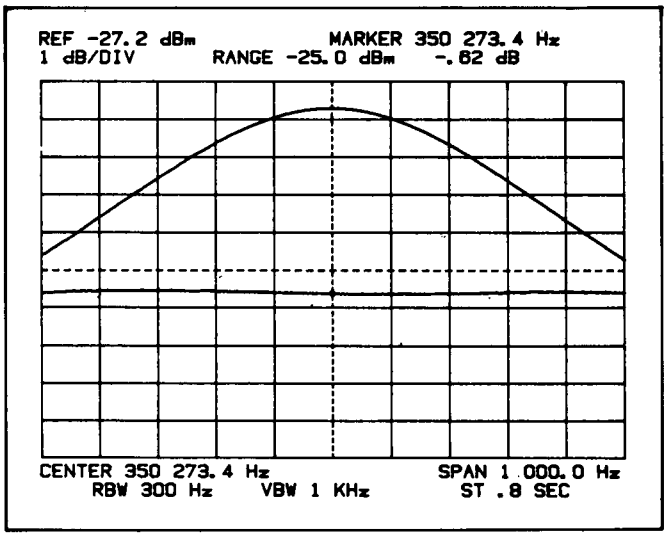


**Figure 5-28. Correctly Adjusted IF Stage, A-B Mode**

g. On the 3585 keyboard enter the following commands:

A-B.....off
FREQUENCY SPAN.....50kHz
dB/Div.....10dB

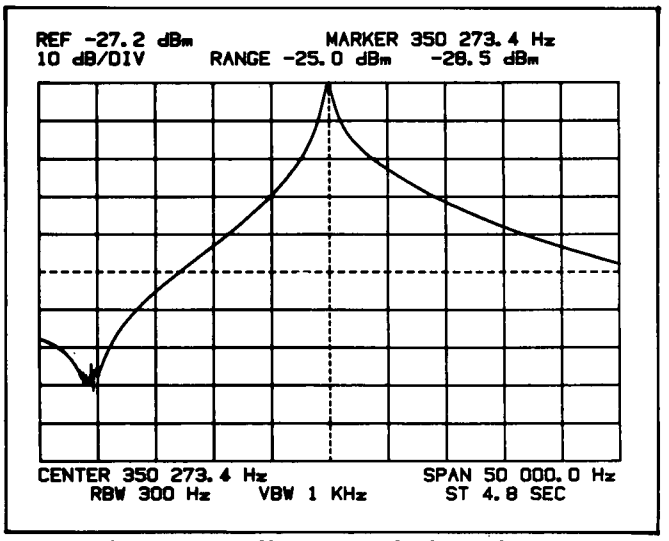


**Figure 5-29. Unsymmetrical IF Display**

h. Adjust A19C41 for the best possible trace symmetry.

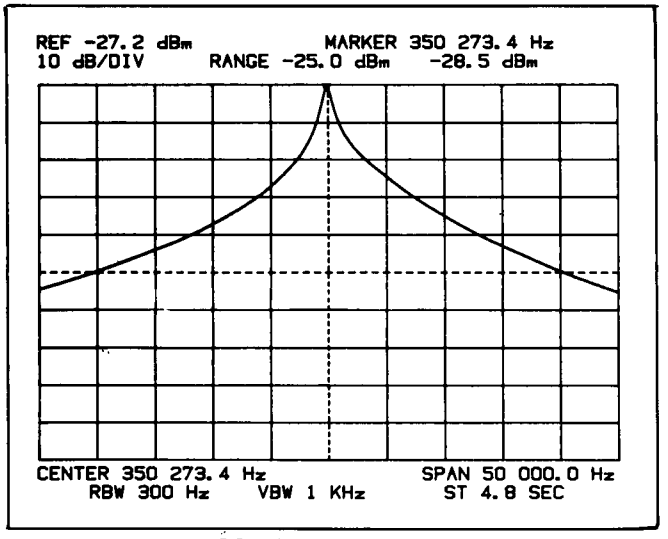


**Figure 5-30. Symmetrical IF Display**

## 5-22. Fourth Crystal Stage Adjustment

a. DO NOT TURN THE 3585 POWER OFF. Remove the A19 board. Move test jumper A19J1 to the "OP" position and test jumper A19J2 to the "T" position. Reinstall A19 Board in instrument.

b. Set the 3585 controls for:

FREQUENCY SPAN.....1kHz
RES BW.....300Hz
dB/DIV.....1dB
A-B.....on

c. Adjust A19C66 so that the A trace approximates a straight, horizontal line.

d. Adjust REFERENCE LEVEL to same as the stored trace.

e. Set the 3585 controls for:

A-B ..... off
FREQUENCY SPAN ..... 50kHz
dB/DIV ..... 10dB

f. Adjust A19C30 for the best possible trace symmetry.

## 5-23. Fourth LC Stage Adjustment

a. DO NOT TURN THE 3585 POWER OFF. Place the A19 board on a PC extender.

b. Move test jumper A19J2 to the "OP" position and test jumper A19J3 to the "T" position. Check that A19J4 is in the "OP" position.

c. Enter the following 3585 keyboard settings:

RES BW ..... 1kHz
FREQUENCY SPAN ..... 3.3kHz
dB/DIV ..... 1dB
A-B ..... on

d. Adjust A19L5 so that the A trace approximates a straight, horizontal line.

e. Set the 3585 controls for:

A-B ..... off
RES BW ..... 30kHz
OFFSET ..... on

f. Allow a complete sweep to occur, then press ENTER OFFSET.

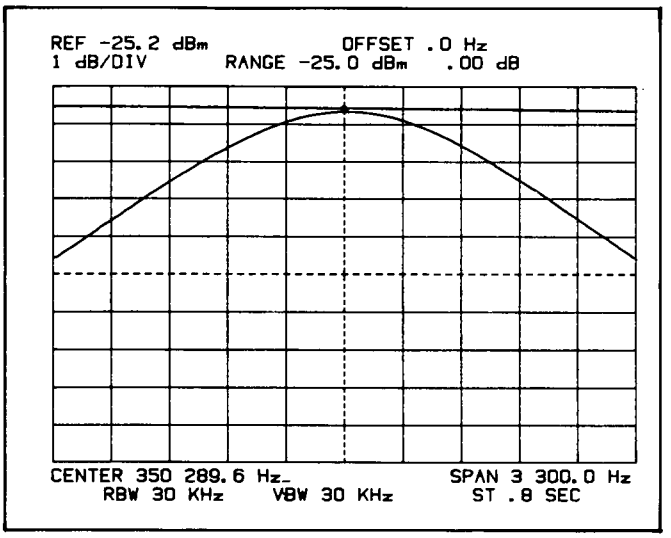


**Figure 5-31. LC Stage, 30kHz Amplitude Reference**

g. Enter a RES BW of 1kHz on the 3585.

h. Adjust A19R28 so that the marker amplitude reading equals .00dB.

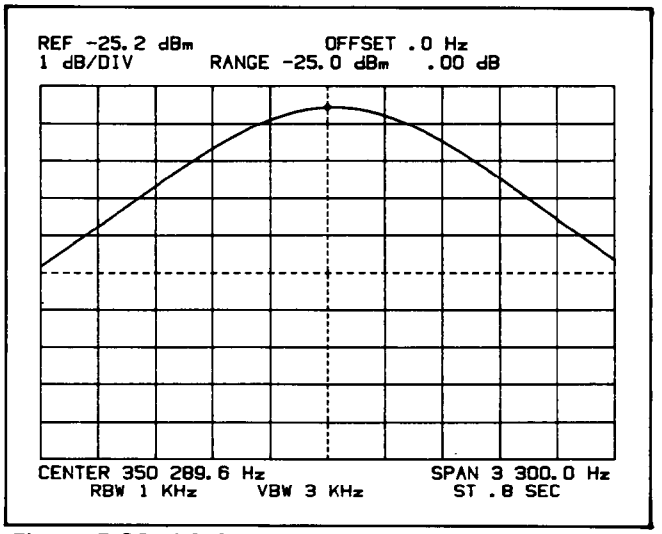


**Figure 5-32. LC Stage, 1kHz Amplitude Adjustment**

## 5-24. Fifth LC Stage Adjustment

a. Move test jumper A19J3 to the "OP" position and test jumper A19J4 to the "T" position.

b. Enter the following 3585 keyboard settings:

OFFSET ..... off
FREQUENCY SPAN..... 3.3kHz
A-B ..... on

c. Adjust A19L4 so that the A trace approximates a straight, horizontal line.

d. Set the 3585 controls for:

A-B.....off
RES BW.....30kHz
OFFSET..... on

e. Allow a complete sweep to occur, then press ENTER OFFSET.

f. Set the 3585 controls for a RES BW of 1kHz

g. Adjust A19R20 for a marker amplitude reading of .00dB.

h. Move test jumper A19J4 to the "OP" position.

## 5-25. Third Crystal Stage Adjustment

a. DO NOT TURN THE 3585 POWER OFF. The stored trace and center frequency information must not be lost when the A17 or A18 boards are placed on PC extenders.

b. Leaving the 3585 power on, remove the A18 board, A19 board and the PC extender from the instrument.

c. CAREFULLY put the A19 board back in the correct slot of the card nest.

d. Being careful not to short the PC connector pins together, insert the PC extender in the A18 board position of the card nest.

e. Place the A18 board on the PC extender.

f. Check that the B trace is still intact. The A trace may have glitches on it, but this does not cause a problem. If the B trace information is good, procede with the adjustments. If the B trace has been lost or altered, go back to the beginning of the I.F. filter adjustment and complete all the adjustments up to Fifth Crystal Filter Adjustment. This will re-establish your reference trace. You may then continue at the Third Crystal Stage Adjustment.

g. Enter the following 3585 keyboard settings:

OFFSET ..... off
CF STEP SIZE ..... 1.2Hz
RES BW ..... 300Hz
FREQUENCY SPAN ..... 1kHz
dB/DIV ..... 1dB

h. Adjust A18L6 for the maximum possible marker amplitude reading.

i. Enter the following 3585 keyboard setting:

A-B ..... on

j. Adjust A18L4 so that the A trace approximates a straight, horizontal line.

k. Set the 3585 controls for:

A-B ..... off
FREQUENCY SPAN ..... 50kHz
dB/DIV ..... 10dB

l. Adjust A18C24 for the best possible trace symmetry.

## 5-26. Third LC Stage Adjustment

a. Set the 3585 controls for:

SWEEP ..... Cont
RES BW ..... 1kHz
FREQUENCY SPAN ..... 3.3kHz
A-B ..... on
dB/DIV ..... 1 dB

b. Adjust A18L5 so that the A trace approximates a straight, horizontal line.

c. Enter the following 3585 keyboard settings:

A-B ..... off
RES BW ..... 30kHz
OFFSET ..... on

d. Allow time for a complete sweep to occur, then press ENTER OFFSET.

e. Set the 3585 controls for a RES BW of 1KHz.

f. Adjust A18R15 for a marker amplitude reading of .00dB.

### 5-27. Second Crystal Stage Adjustment

a. DO NOT TURN THE 3585 POWER OFF.

b. Remove the A17 board, A18 board and the PC extender from the instrument.

c. CAREFULLY put the A18 board back in the correct slot of the card nest.

d. Move test jumper A17J4 to the "T" position and place the A17 board on the PC extender.

e. Check that the B trace is still intact. The A trace may have glitches on it, but this does not cause a problem. If the B trace information is good, procede with the adjustments. If it has been lost or altered, go back to the beginning of the I.F. Filter Adjustments and complete all the adjustments up to the Fifth Crystal Stage Adjustment. This will re-establish your reference trace. You may then continue at the Second Crystal Stage Adjustment.

f. Set the 3585 controls for:

OFFSET ..... OFF
CF STEP SIZE ..... 1.1Hz
RES BW ..... 300Hz
FREQUENCY SPAN ..... 1kHz
dB/DIV ..... 1dB
A-B ..... on

g. Adjust A17C71 so that the A trace approximates a straight, horizontal line.

h. Enter the following 3585 keyboard settings:

A-B ..... off
FREQUENCY SPAN ..... 50kHz
dB/DIV ..... 10dB

i. Adjust A17C39 for the best possible trace symmetry.

j. Enter:

dB/DIV ..... 1dB
FREQUENCY SPAN ..... 1kHz

k. Adjust A17L8 for the maximum possible marker amplitude.

## 5-28. First Crystal Stage Adjustment

a. DO NOT TURN THE 3585 POWER OFF. Move test jumper A17J4 to the "OP" position and test jumber A17J5 to the "T" position. Remove the PC extender and replace the A17 board back in the card nest.

b. Set the 3585 controls for:

RES. BW ..... ⇧ ⇩
FREQUENCY SPAN ..... 1kHz
dB/DIV ..... 1dB
A-B ..... on

c. Adjust A17C70 so that the A trace approximates a straight, horizontal line.

d. Set the 3585 controls for:

A-B ..... off
FREQUENCY SPAN ..... 50kHz
dB/DIV ..... 10dB

e. Adjust A17C29 for the best possible trace symmetry.

## 5-29. Second LC Stage Adjustment

a. DO NOT TURN THE 3585 POWER OFF. Remove the A17 board and place it on a PC extender. Move test jumper A17J5 to the "OP" positon and test jumper A17J2 to the "T" position.

b. Set the 3585 controls for:

RES BW ..... ⇧ ⇩
RES BW ..... 1kHz
FREQUENCY SPAN ..... 3.3kHz
dB/DIV ..... 1dB
A-B ..... on

c. Adjust A17L5 so that the A trace approximates a straight, horizontal line.

d. Set the 3585 controls for:

A-B ..... off
RES BW ..... 30kHz
OFFSET ..... on

e. Allow a complete sweep to occur, then enter:

ENTER OFFSET
RES BW.....1kHz

f. Adjust A17R20 for a marker amplitude reading of .00dB.

### 5-30. First LC Stage Adjustment

a. Move test jumper A17J2 to the "OP" position and test jumper A17J3 to the "T" position.

b. Set the 3585 controls for:

OFFSET.....OFF
FREQUENCY SPAN.....3.3kHz
dB/DIV.....1dB
A-B.....on

c. Adjust A17L4 so that the A trace approximates a straight, horizontal line.

d. Set the 3585 controls for:

A-B.....off
RES BW.....30kHz
OFFSET.....on

e. Allow a complete sweep to occur, then enter:

ENTER OFFSET
RES BW.....1kHz

f. Adjust A17R12 for a marker amplitude reading of .00dB.

g. Move test jumper A17J3 to the "OP" position. Check that all test jumpers on the A17 board are in the "OP" position.

h. Turn the 3585 power off. Remove the A17 board from the PC extender and replace it in the card nest.

i. Replace the metal cover over the A17 - A19 boards. Insert and tighten down all screws that hold down the cover. Restore power to the 3585.

**NOTE**

*If continuing DO NOT reconnect green cable at this time.*

## 5-31. Final I.F. Filter Adjustments

**NOTE**

*Make the following I.F. adjustments only after the I.F. board cover is properly screwed down.*

a. Set the synthesizer controls for:

FREQUENCY ..... 350kHz
AMPLITUDE ..... -2.0dBm

b. Connect the output of the synthesizer to a 50Ω termination. Connect the output of the termination to the A17J1 connector.

c. Set the 3585 controls for:

SHIFT 619
INSTRUMENT PRESET
CF STEP SIZE ..... 1.1Hz
RES BW ..... 3Hz
MANUAL SWEEP ..... on
dB/DIV ..... 1dB
CLEAR A

d. Adjust A17C27 for the maximum possible marker amplitude reading. Adjust the REF LEVEL as necessary to keep the marker below the top of the screen.

e. Adjust A17C37 for the maximum possible marker amplitude reading.

f. Enter CF STEP SIZE step [⌂] on the 3585 keyboard.

g. Adjust A18C22 for the maximum possible marker amplitude reading.

h. Enter OF STEP SIZE step [⌂] on the 3585 keyboard.

i. Adjust A19C28 and A19C39 for the maximum possible marker amplitude reading.

j. Set the 3585 controls for:

SHIFT 601
INSTRUMENT PRESET
MANUAL SWEEP ..... on
dB/DIV ..... 1dB
CLEAR A
OFFSET ..... on
ENTER OFFSET
RES BW ..... 300Hz

k. Adjust the REF LEVEL as necessary to keep the marker below the top of the screen.

l. Adjust A17R26 for a .00dB marker reading.

m. Enter RES BW Step ⇩ on the 3585 keyboard.

n. Adjust A17R28 for a .00dB marker reading.

o. Enter RES BW Step ⇩ on the 3585 keyboard.

p. Adjust A17R30 for a .00dB marker reading.

q. Enter RES BW Step ⇩ on the 3585 keyboard.

r. Adjust A17R32 for a .00dB marker reading.

s. Enter RES BW Step ⇩ on the 3585 keyboard.

t. Adjust A17R34 for a .00dB marker reading.

## 5-32. 16dB Amplifier Adjustment

a. Disconnect the synthesizer from the A17J1 connector.

b. Connect the Tracking Generator output to a 10dB/step attenuator. Connect the 10dB/step attenuator to a 1dB/step attenuator and place a 50Ω termination on the output of the 1dB/step attenuator. Connect the output of the termination to the A17J1 connector.

c. Set the 3585 controls for:

SHIFT 601
INSTRUMENT PRESET
CENTER FREQUENCY.....350kHz
FREQUENCY SPAN..... 100kHz
RES BW.....10kHz
dB/DIV ..... 2dB
MANUAL SWEEP.....on
RANGE.....-25dBm
REFERENCE LEVEL.....-28dBm

d. Adjust the Tracking Generator amplitude for a marker amplitude reading of -28.00dBm.

e. Set the 3585 controls for:

OFFSET.....on
ENTER OFFSET

f. Set the external attenuators for 16dB of attenuation.

g. Set the 3585 REFERENCE LEVEL to -44dBm.

h. Adjust A18R77 for an offset marker amplitude reading of -16.00dB.

i. Set the external attenuators for 32dB of attenuation.

j. Set the 3585 REFERENCE LEVEL to -60dBm.

k. Adjust A18R71 for an offset marker amplitude reading of -32.00dBm.

l. Set the external attenuators for 48dB of attenuation.

m. Set the 3585 REFERENCE LEVEL to -76dBm.

n. Adjust A18R65 for an offset marker amplitude reading of -48.00dB.

o. Disconnect the Tracking Generator from A17J1. Reconnect the cable from A6CJ1 to A17J1.

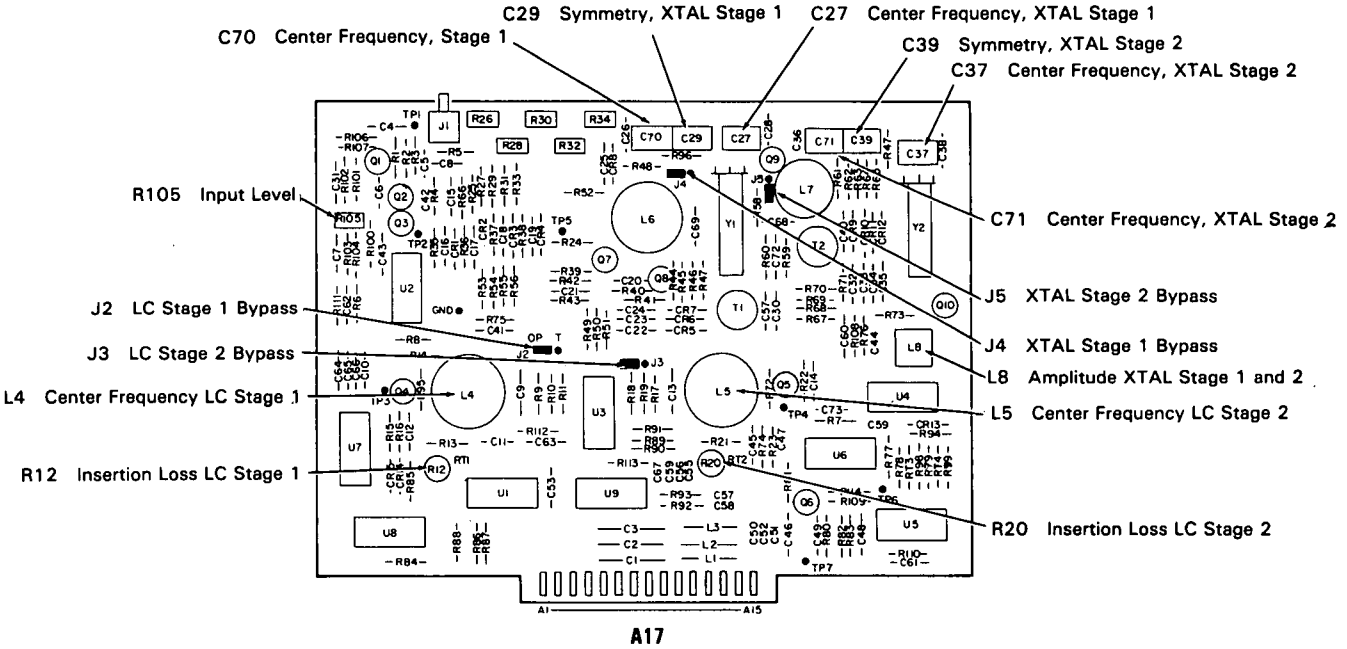


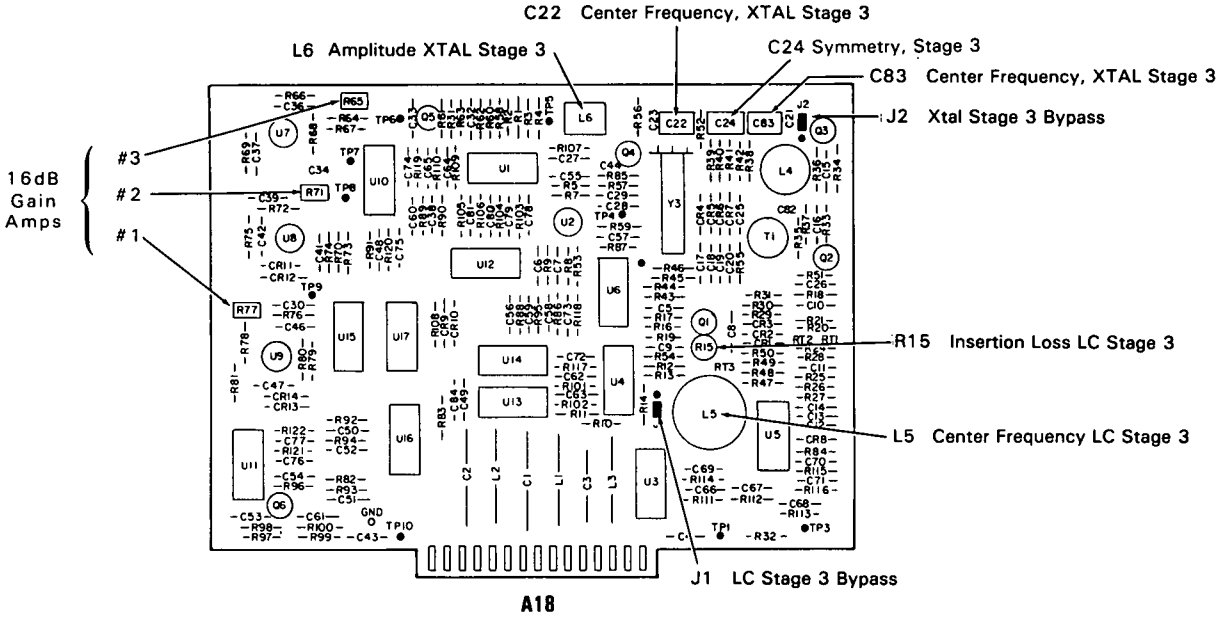


**Figure 5-34. IF Boards(A17-A18).**

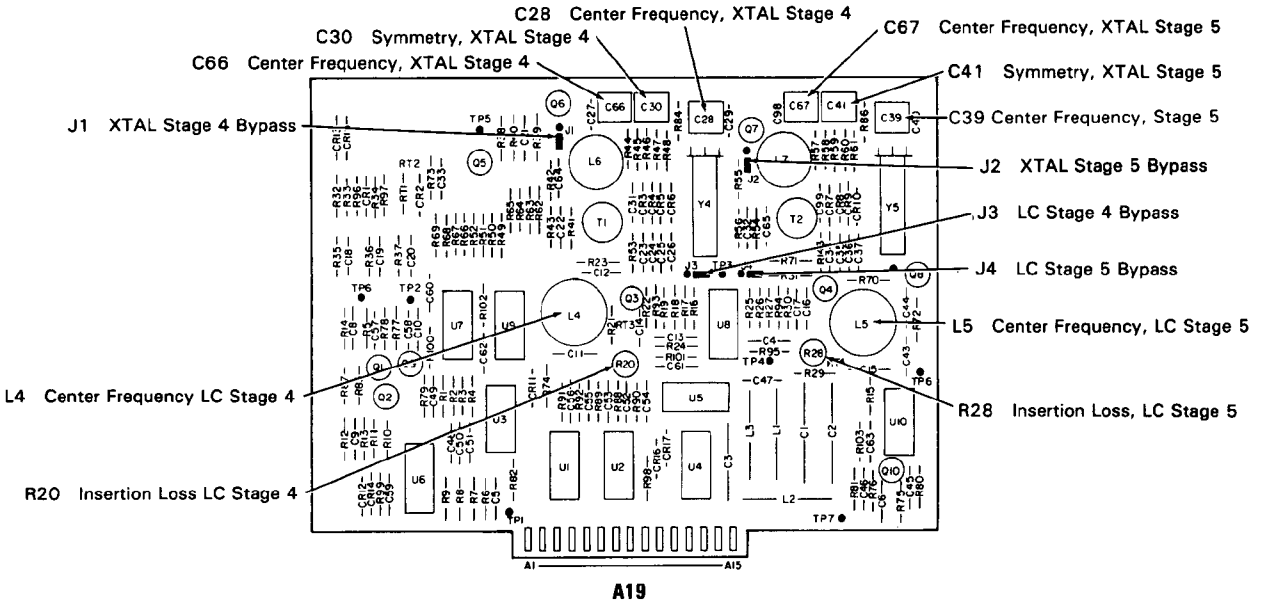


**Figure 5-33. IF Boards(A19)(continued).**

## 5-33. CONVERSION SECTION ADJUSTMENTS

This section adjusts the filters associated with the first, second and third mixers. These filters are of two basic types, peak and notch. Peak filters will be adjusted for a maximum amplitude and notch filters for a minimum.

**NOTE**

*The Source used for these adjustments must be frequency locked to the 3585 with the 10MHz REF OUTPUT.*

**NOTE**

**All** *top, bottom and side screws on the input section* **must** *be in place and tight before making these adjustments.*

a. Turn the 3585 power off.

b. Set the 3585 on its left side and remove the bottom cover.

c. Adjustment of the Conversion Section requires its removal from the instrument; therefore, disconnect all cables connected to the Input/Conversion Section.

d. Collect a stack of books approximately eight inches high. This stack of books will be used as a support for the Input/Conversion Section.

e. Place the stack of books in the position shown in Figure 5-34. Be careful not to touch the high voltage section.

f. Remove the seven screws which hold the Input/Conversion Section in the instrument.

g. Carefully remove the input section by moving it toward the rear of the instrument until the input connectors clear the front panel. Ensure that the BNC connectors do not damage the front panel trim.

h. Place the Input/Conversion Section on the stack of books, bottom side down (Conversion side up).

i. Connect a Spectrum Analyzer to the A50J1 90MHz output with the BNC-to-Sealectro adapter cable. This output is located on the bottom side of the Tracking Generator Motherboard.

j. Turn 3585 power on.

k. Verify that the 90MHz output level is +15dBm ±3dB.

l. Connect the Spectrum Analyzer to the A50J2 10MHz output. This output is also located on the bottom of the Tracking Generator Motherboard.

m. Verify that the 10MHz output level is +18dBm ±3dB.

n. Reconnect all cables to the Input/Conversion Section.

o. Check that the instrument down ranges to the -25dBm Range with no input signal.

p. Press the INSTRUMENT PRESET key of the 3585.

q. Connect an Ohmmeter to the 50Ω input. Ground lead to the outer shell of the 50Ω input connector and the ohms lead to the center pin of the input connector.

r. The Ohmmeter should now read 50Ω ± 2Ω.

s. Press the 1MΩ Impedance key. This action terminates the input with a 50Ω load.

t. The Ohmmeter should now read 50Ω ± 2Ω. (This reading should be slightly different than the previous 50Ω reading.)

u. Press the 75Ω Impedance key on the 3585.

v. The Ohmmeter should now read 75Ω ± 2Ω.

w. Press the 1MΩ Impedance key. This action terminates the input with a 75Ω load.

x. The Ohmmeter should now read 75Ω ± 2Ω. (This reading should be slightly different then the previous 75Ω reading.)

y. Set the 3585 controls for:

SHIFT 601
INSTRUMENT PRESET
MANUAL ENTRY.....9MHz
dB/DIV ..... 1dB
SAVE 1

z. Set the synthesizer controls for:

FREQUENCY.....9MHz
AMPLITUDE.....0dBm

aa. Connect the synthesizer output to the 3585 50Ω input.

**NOTE**

*Use a non-metalic adjusting tool for all Conversion section adjustments.*

**NOTE**

*When more than one component is called out for adjustment in any given step, adjust them in the order listed.*

**NOTE**

*Figure 5-45 shows the location of the Input/Conversion section adjustments.*

bb. Adjust the REF LEVEL as necessary to keep the marker near the center of the screen.

cc. Adjust the 100.35MHz Passband Filter using A3L7, L5, L3 and L1. Adjust for the maximum marker amplitude possible.

dd. Adjust the 10.35MHz Passband Filter using A5L6, L4, L2 and A4L7. Adjust these controls for a peak display of signal.

ee. Set the 3585 controls for:

MANUAL FREQUENCY.....8.3MHz
RANGE.....-10dBm
dB/DIV ..... 10dB
RES BW.....3Hz
VIDEO BW.....1Hz
SAVE 2

**NOTE**

*Disregard Input Overload indicator.*

ff. Adjust the Stopband of the 10.35MHz Filter using A5L5, L3 and L1. Adjust for a *minimum* marker amplitude reading. Adjustment should yield a marker amplitude reading less than -95dBm.

gg. Using RECALL 1, repeat step dd; and using RECALL 2 repeat step ff. Repeat until no further improvements can be made.

hh. Set the 3585 controls for:

PRESET (RBW-VBW-ST)
MANUAL FREQUENCY.....9MHz
RANGE ..... 0dBm
dB/DIV ..... 1dB
CLEAR A

ii. Adjust the 350kHz filter using A5T3 and T4. Adjust for a maximum marker amplitude reading.

jj. Move test jumper A2J5 to the "TEST" position.

kk. Adjust the REFERENCE LEVEL as necessary to keep the marker near midscreen.

ll. Adjustment of the first half of the 100.35MHz Passband Filter is accomplished using A2L7, L8, L11 and L12. Adjust these components for a maximum marker amplitude reading. A2L7 and L8 are bendable wire inductor adjustments.

mm. Move test jumper A2J5 back to the "NORM" position.

nn. Adjust the REFERENCE LEVEL as necessary to keep the marker near midscreen.

oo. Set the synthesizer for a FREQUENCY of 33MHz.

pp. Set the 3585 controls for:

MANUAL ENTRY.....12.3MHz
dB/DIV ..... 10dB
RES BW.....3Hz
VIDEO BW.....1Hz
RANGE.....-10dBm
SAVE 1

qq. Adjust A3L2 and C8 for a minimum marker amplitude reading. Proper adjustment will yield a marker amplitude reading of less than -95dBm.

rr. Set the 3585 controls for:

PRESET (RBW-VBW-ST)
CENTER FREQUENCY.....33MHz
MANUAL ..... ON
RANGE ..... 0dBm
dB/DIV ..... 1dB

ss. Adjust the REFERENCE LEVEL as necessary to keep the marker near midscreen.

SAVE 2

tt. Adjust A3L1, L3, L2 and L7 for a maximum marker amplitude reading. Adjust this group of inductors several times to insure that the peak of the 100.35MHz filter has been obtained. (If necessary adjust the Reference Level to keep the marker on screen.)

uu. Using RECALL 1, repeat step qq; using RECAL 2, repeat step tt. Repeat until no further improvements can be made.

**NOTE**

**Do not** *adjust A4C2 and C3 (steps tt thru xx) unless repairs have been made on the A4 board.*

vv. Using a 20:1, 1kΩ resistive probe (HP-10020A) and a Spectrum Analyzer, place the probe tip on the exposed portion of A4C3. The 90MHz IF signal is available on this portion of C3.

ww. Adjust A4C2 for a maximum amplitude on the Spectrum Analyzer.

xx. Observe the amplitude on the Spectrum Analyzer. Remove the probe from A4C3.

yy. Adjust A4C3 slightly. Place the probe tip on A4C3 and check the amplitude. Continue adjusting A4C3 until a maximum amplitude response is obtained. Repeat A4C2, and A4C3 adjustments until no further improvements can be made.

zz. This complete the Conversion Section Adjustments.

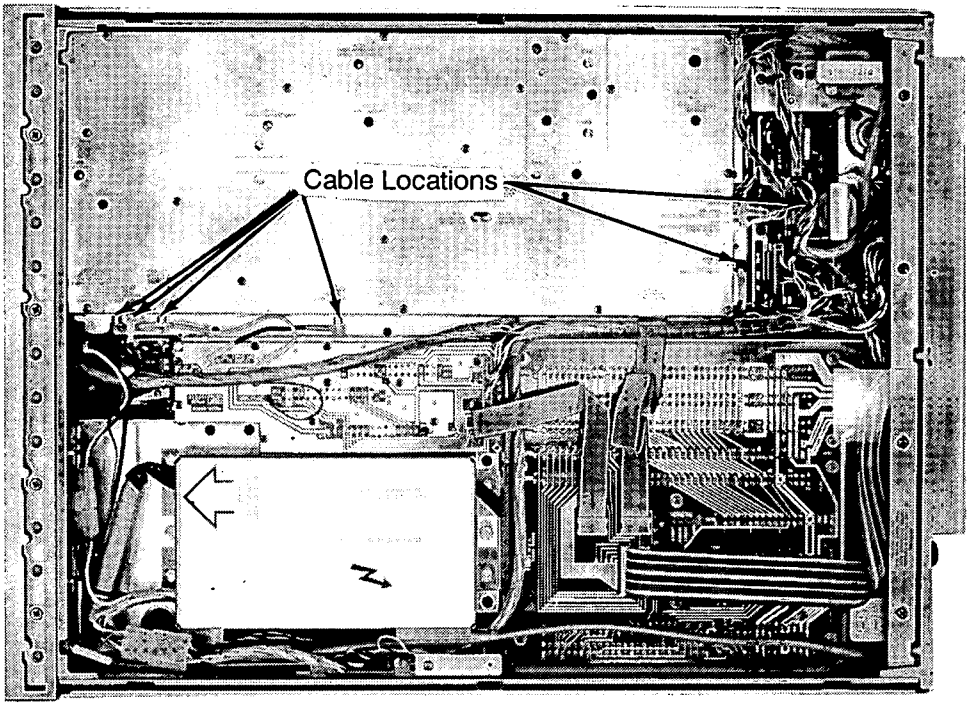


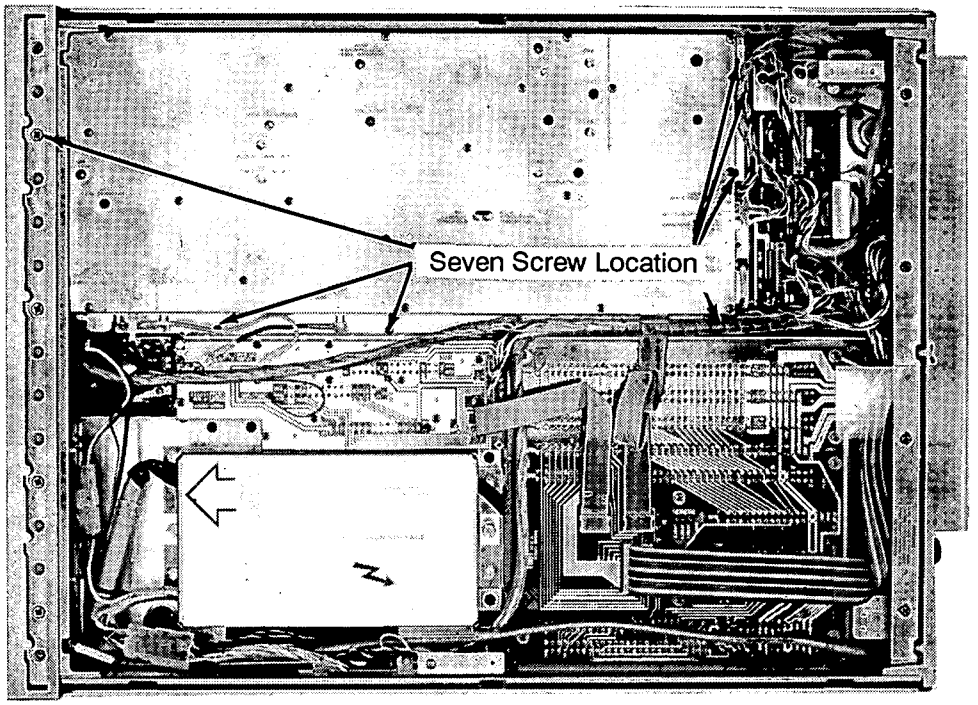


**Figure 5-34 . Removal of the Input/Conversion Section.**

Book Placement

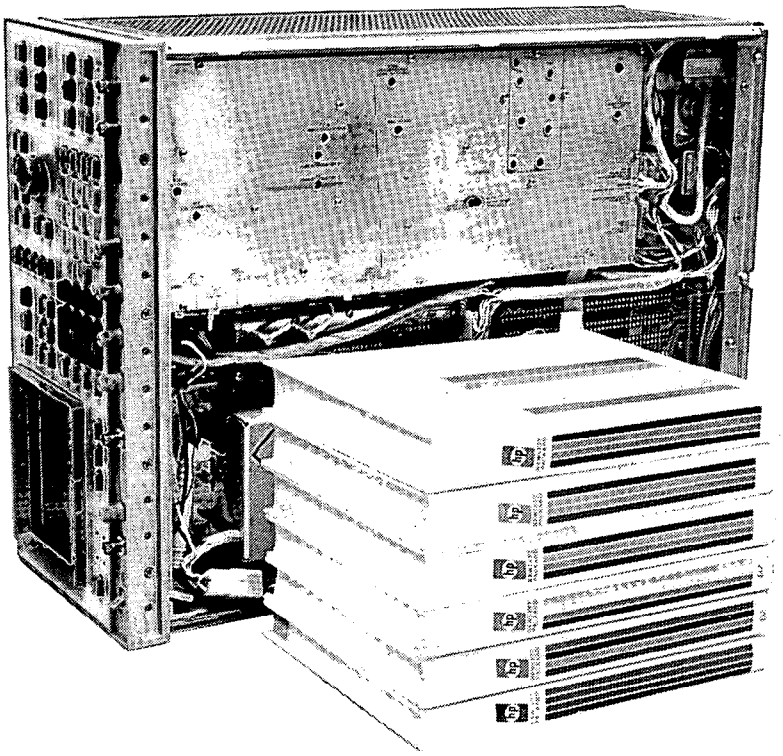

Conversion Section In Position For Adjustment

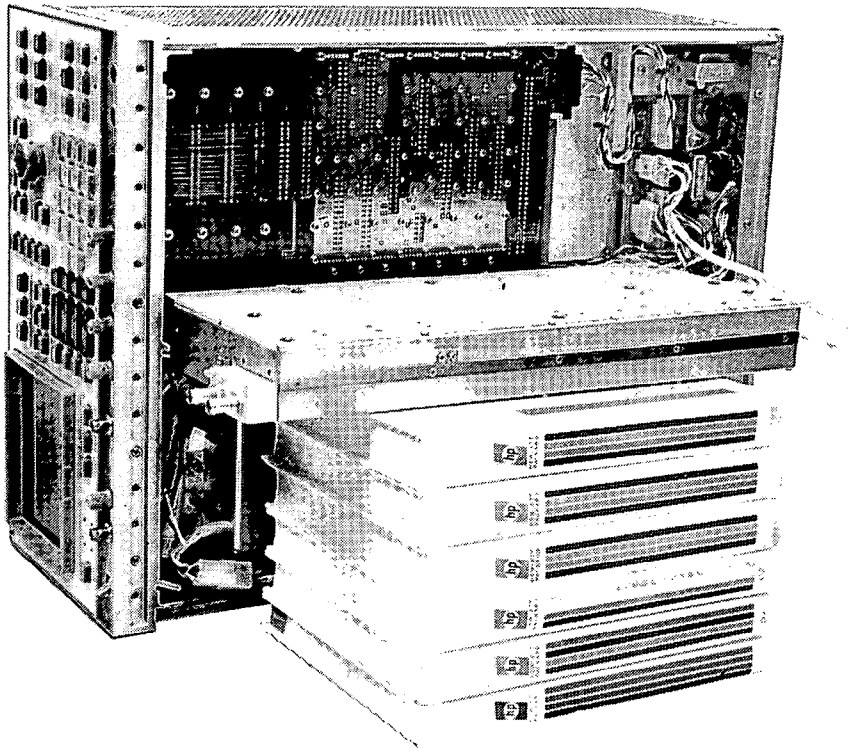

**Figure 5-34. Removal of the Input/Conversion Section(continued).**

## 5-34. INPUT SECTION

This section contains procedures to make the required adjustments on the Input board. These adjustments include Calibrator Symmetry, Input flatness, Autorange trip points, Calibrator Output Level, 1MΩ flatness, Amplitude and Input capacitance, LO Feedthrough and Harmonic Distortion.

a. Being careful not to harm any of the cables connected to the Input/Conversion Section, turn the Input box on its side so that the bottom (Input Section, A1 board) is accessable (see Figure 5-35).

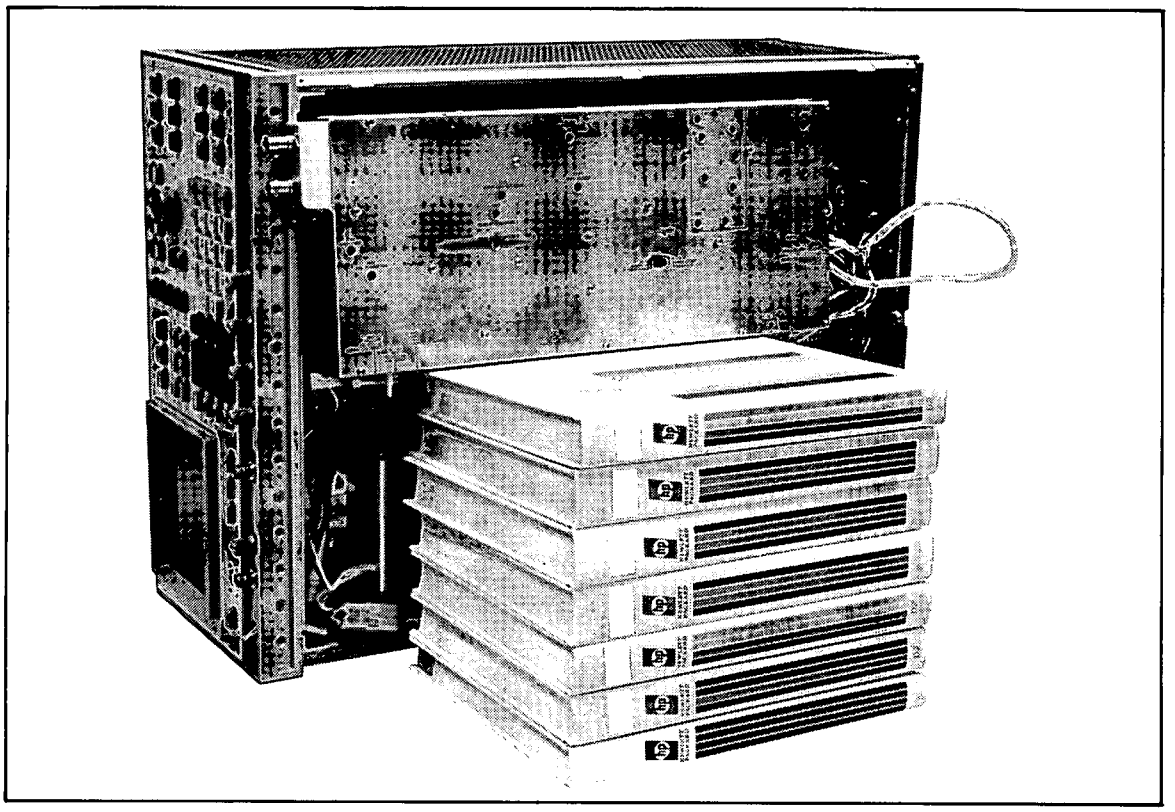

**Figure 5-35. Input/Conversion Box Positioning For Adjustment**

### 5-35. Calibrator Symmetry Adjustment.

a. Set the 3585 controls for:

SHIFT 605
INSTRUMENT PRESET
RANGE.....-25dBm
AUTORANGE.....off
CENTER FREQUENCY.....20.1MHz

b. Remove the cable from A1J3.

c. Slowly replace the cable until a display similar to Figure 5-36 is obtained. When this display is obtained, do not push the cable in any further.

d. Adjust the CAL SYMMETRY control, R52, for the maximum possible marker amplitude.

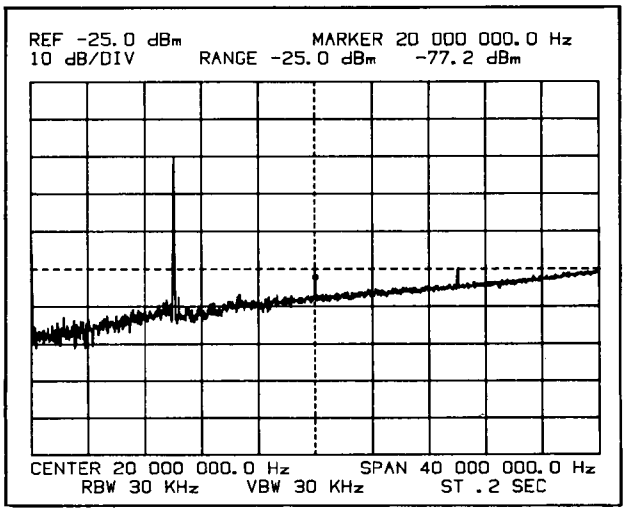


**Figure 5-36. Calibrator Symmetry Adjustment (A1R52)**

e. Push the cable completely onto A1J3. check that a display similar to Figure 5-40 is obtained.

**NOTE**

*If the instrument passes the Calibrator Accuracy test in the Performance Test section, go on to paragraph 5-36. Only if the Calibrator Accuracy Test has failed and you are certain your source is not at fault should you perform the following steps.*

f. Using the results of the Calibrator Accuracy Test, determine if the 40MHz point is higher or lower than the 10MHz point.

g. Select a new A1C50* from the list below. Choose a smaller value to raise the 40MHz point and a larger value to lower the 40MHz point. (This capacitor affects the Calibrator's frequency response above 20MHz.)

| Capacitor Value | HP Part Number |
|---|---|
| 10pf | 0160-2257 |
| 12pf | 0160-2259 |
| 16pf | 0160-2262 |

h. Remove the Input/Conversion box from the 3585.

i. Remove the cover on the Input board side.

j. Replace A1C50*.

k. Replace the cover and all screws.

l. Replace the Input/Conversion box in the instrument.

m. Retest the Calibrator Flatness with the Calibrator Accuracy Test.

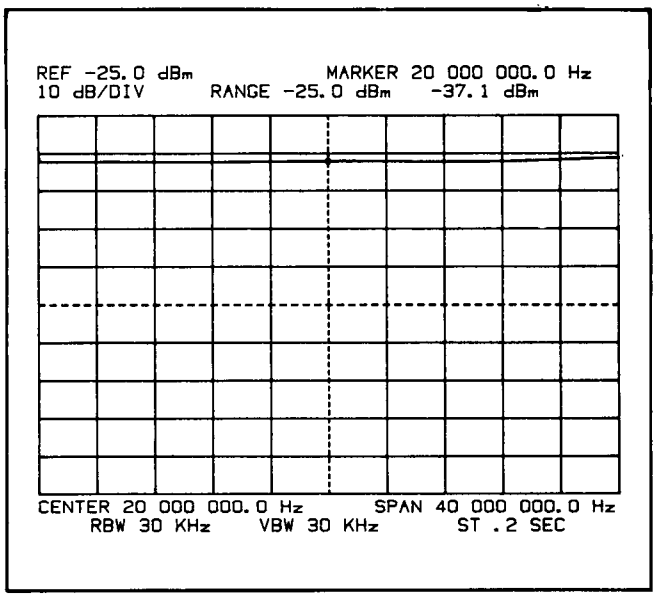


**Figure 5-37. Normal Display For Test Mode 05**

## 5-36. Flatness Adjustment

a. Move test jumper A15W1 to the "TEST" position.

b. Set the 3585 controls for:

SHIFT 605
INSTRUMENT PRESET
CENTER FREQUENCY.....20.1MHz
dB/DIV ..... 2dB
RANGE ..... −25dBm
AUTORANGE.....off

c. Using the Continuous Entry control, adjust the REF LVL so that the trace is centered on the CRT.

d. The 3585 is now in its 0.2dB/DIV mode. This allows very fine adjustment of the instruments flatness.

e. Adjust the input flatness with the following components in the order shown.

A1R131, C83, L18, C86, L19, C89, L21, C92

The input flatness of the instrument should resemble Figure 5-39 when completely adjusted. The effect of each adjustment is shown in Figure 5-40. Continue adjustment of the instrument flatness until the peak to peak variation of the trace is less than 0.2dB (1 division).

f. Move test jumper A15W1 to the "NORM" position.

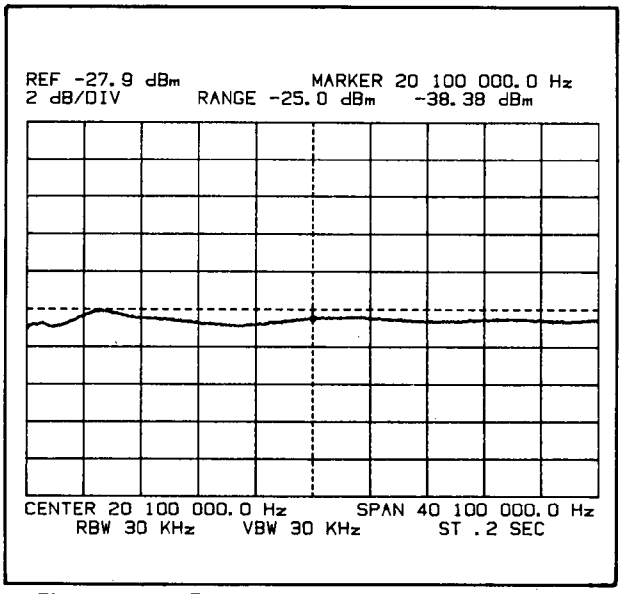


**Figure 5-38. Properly Adjusted Input Flatness**

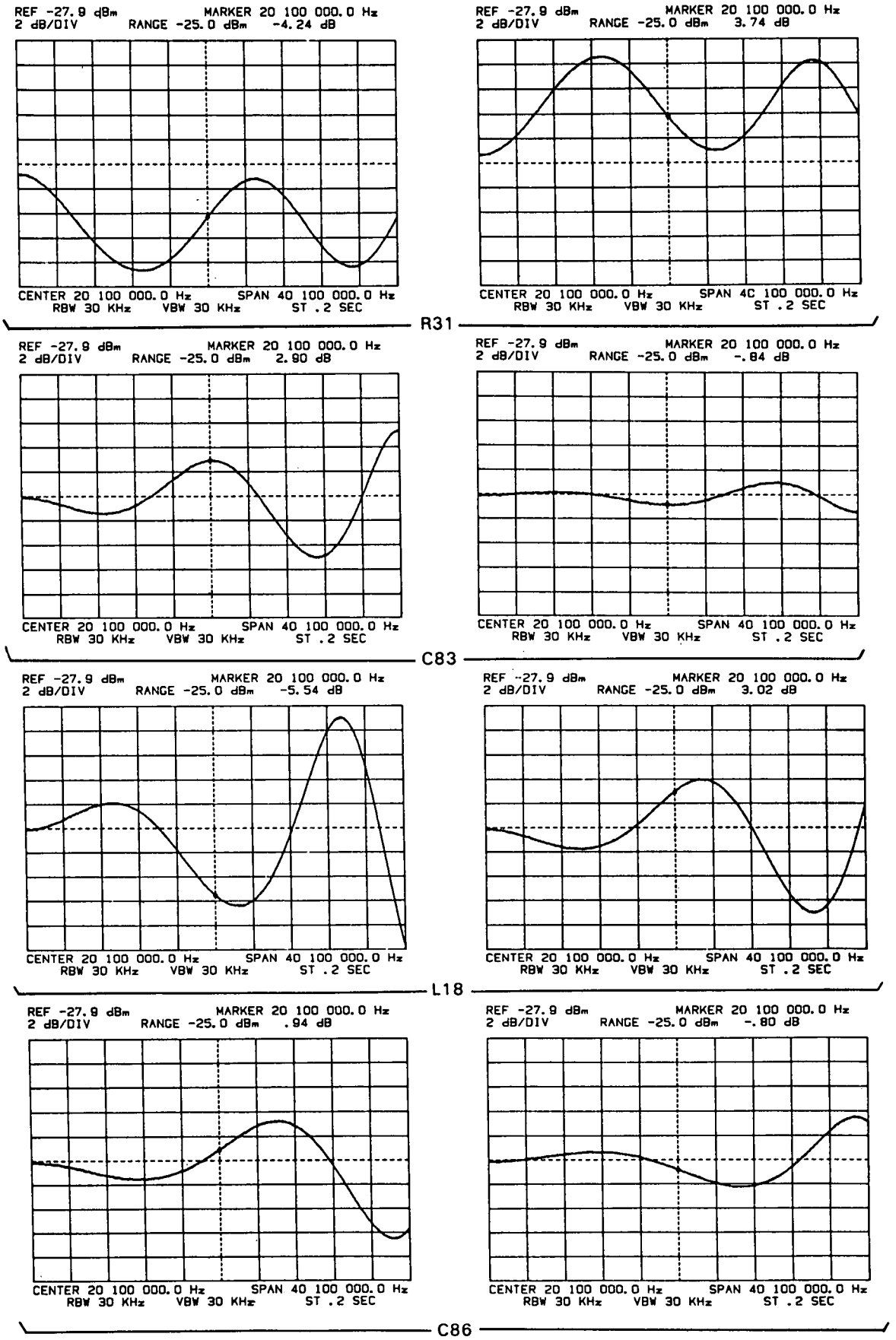


**Figure 5-39 Input Flatness Adjustments.**

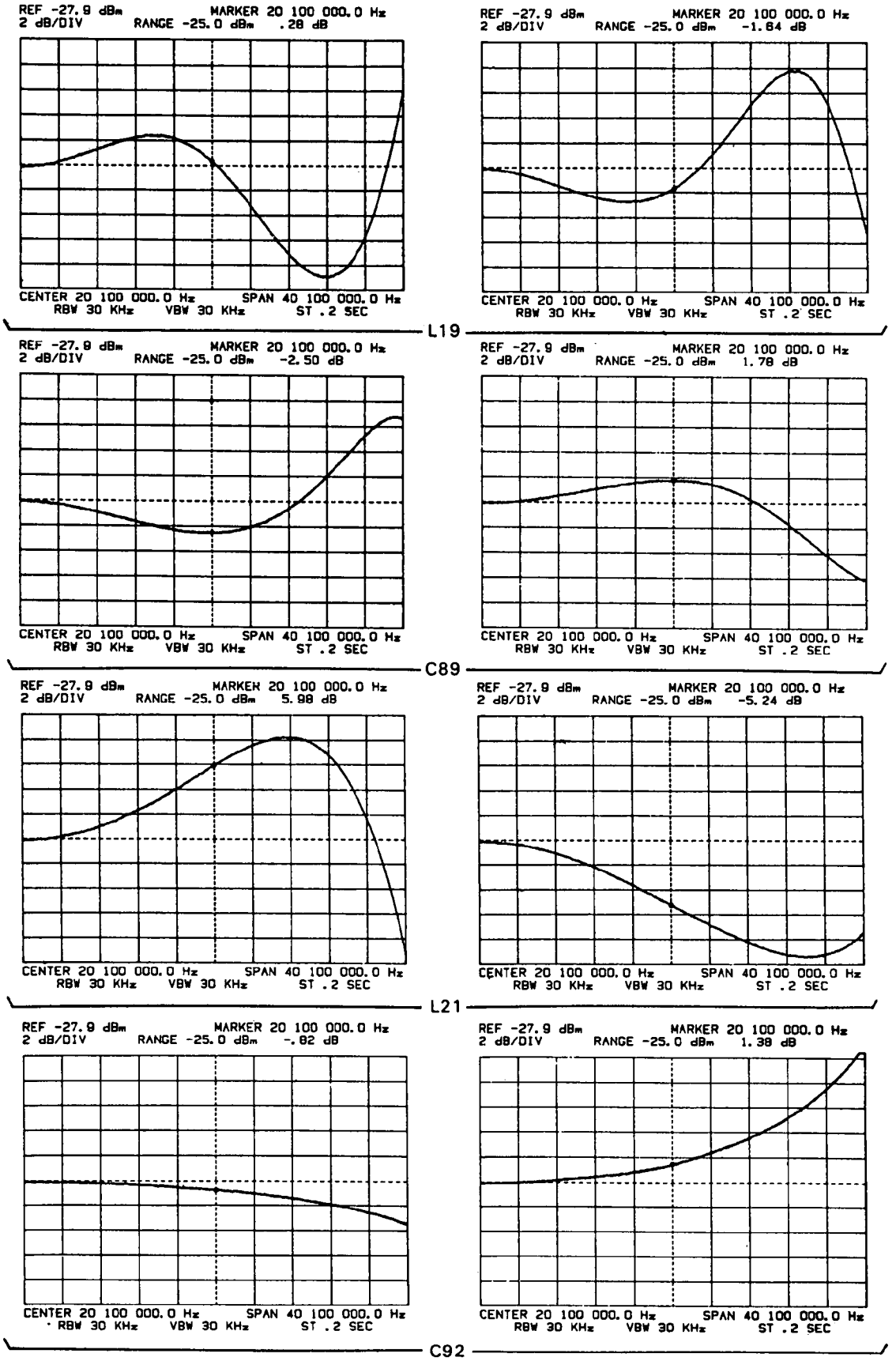


**Figure 5-39 Input Flatness Adjustments (continued).**

## 5-37. Range Up Detector Adjustment

a. Set the synthesizer controls for:

FREQUENCY ..... 30kHz
AMPLITUDE ..... -24dBm

b. Set the 3585 controls for:

SHIFT 601
INSTRUMENT PRESET
RANGE ..... -25dBm
AUTORANGE ..... off

c. Adjust the RANGE UP THRESHOLD, A1R173, so that the front panel OVERLOAD light is lit. Now adjust A1R173 so that the OVERLOAD light just goes out.

## 5-38. Range Down Detector Adjustment

a. Set the 3585 to the 0dBm RANGE.

b. Set the synthesizer for an AMPLITUDE of -6dBm.

c. Adjust the Range Down Threshold, A1R174, so that the A83 RNGD LED (A83CR104) is lit. Now adjust A1R174 so that the RNGD LED just goes out.

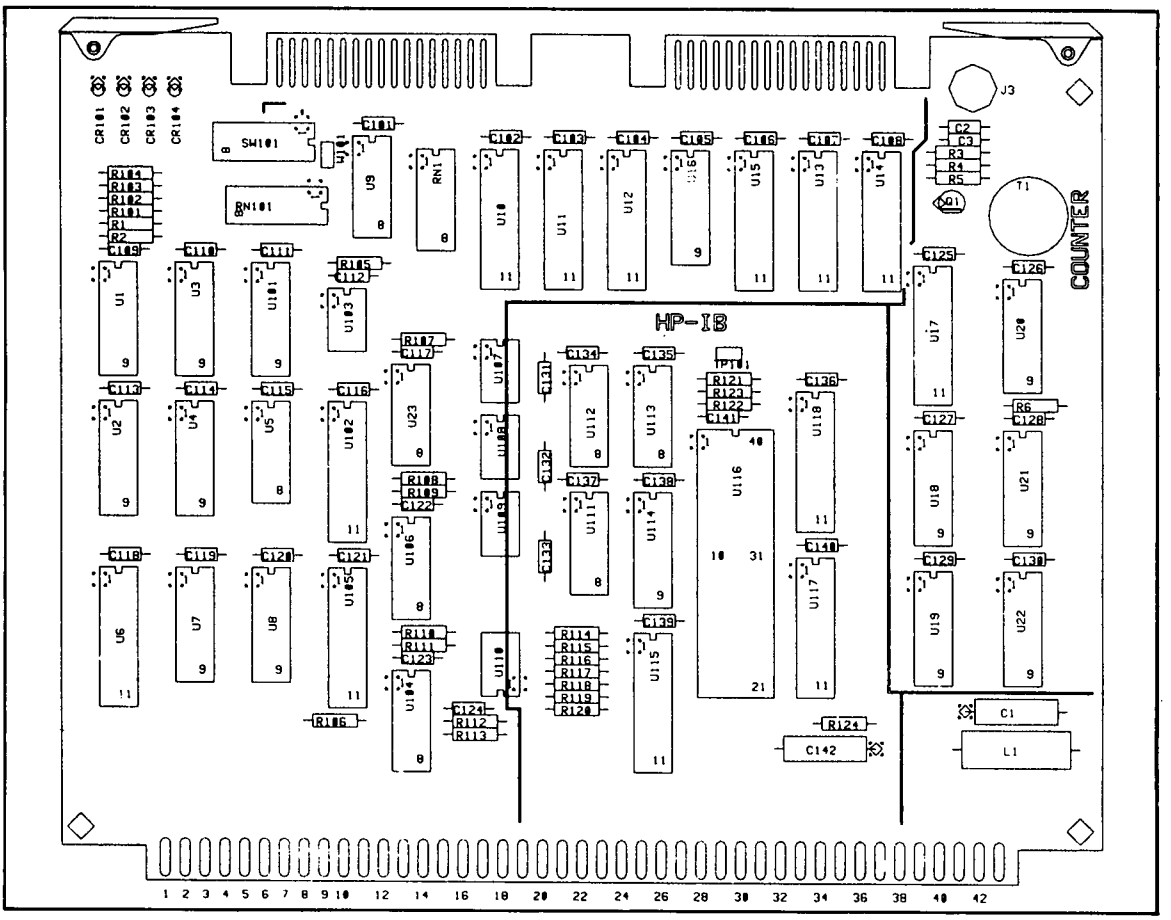


Figure 5-40 Range Down Monitor Point(RNGD)

## 5-39. Top Of Screen Amplitude Adjustment

a. Set the synthesizer controls for:

FREQUENCY ..... 150kHz
AMPLITUDE ..... -25dBm

b. Set the 3585

SHIFT 601
INSTRUMENT PRESET
CENTER FREQUENCY..... 150kHz
RANGE..... -25dBm
AUTORANGE..... off
RES BW..... 30kHz
dB/DIV ..... 1dB
MANUAL SWEEP..... on

c. Adjust A17R105 for a marker amplitude reading of -25.00dBm.

d. Enter SAVE 1 on the 3585.

## 5-40. Calibrator Level Adjustment

**NOTE**

*It is important that the amplitude accuracy of the source used for this adjustment is excellent. The amplitude accuracy of the 3585 depends on the amplitude accuracy of this source.*

a. Set the 3585 control for:

INSTRUMENT PRESET
SHIFT 1 (same settings as in top of Screen Amplitude Adjustments)
Amplitude Adjustments)

b. Adjust A1R39 so that the marker amplitude reads exactly -25.00dBm. The results of this adjustment can only be analyzed after performing the next two steps.

c. Enter SHIFT 4 on the 3585 keyboard.

d. View the results of your adjustment. Repeat the two previous steps until a marker reading of exactly -25.00Bm is obtained after a calibration (SHIFT 4).

### 5-41. 1MΩ Amplitude Adjustment

a. Terminate the 1MΩ 3585 input with a 50Ω feedthrough termination. Move the synthesizer output from the 3585 50Ω input to the 50Ω termination on the 1MΩ input.

b. Press the 1MΩ IMPEDANCE key on the 3585.

c. Adjust A1R108 for a marker amplitude reading of -25.20dBm.

### 5-42. 1MΩ Flatness Adjustment

a. Connect a 10dB/step attenuator to the output of the Tracking Generator. Connect the output of the Attenuator to the 50Ω termination on the 1MΩ input.

b. Set the attenuator for 40dB of attenuation.

c. Turn the Tracking Generator Amplitude control fully clockwise.

d. Set the 3585 controls for:

INSTRUMENT PRESET
1MΩ IMPEDANCE
START FREQUENCY.....1kHz
STOP FREQUENCY.....100kHz
RANGE.....-25dBm
AUTORANGE.....off
dB/DIV.....2dB

e. Move test jumper A15W1 to the "TEST" position.

f. Using the Continuous Entry Control, adjust the REF LVL so that the trace is centered on the display.

g. Press STORE A → B on the 3585.

h. Set the 3585 to the -5dBm RANGE.

i. Set the external attenuator for 20dB.

j. Adjust A1C21 so that the A trace overlaps the B trace as closely as possible (see Figure 5-41).

k. Set the 3585 for the +15dBm RANGE.

l. Set the external attenuator for 0dB.

m. Adjust A1C27 so that the A trace overlaps the B trace as closely as possible.

n. Move test jumper A15W1 back to the "NORM" position.

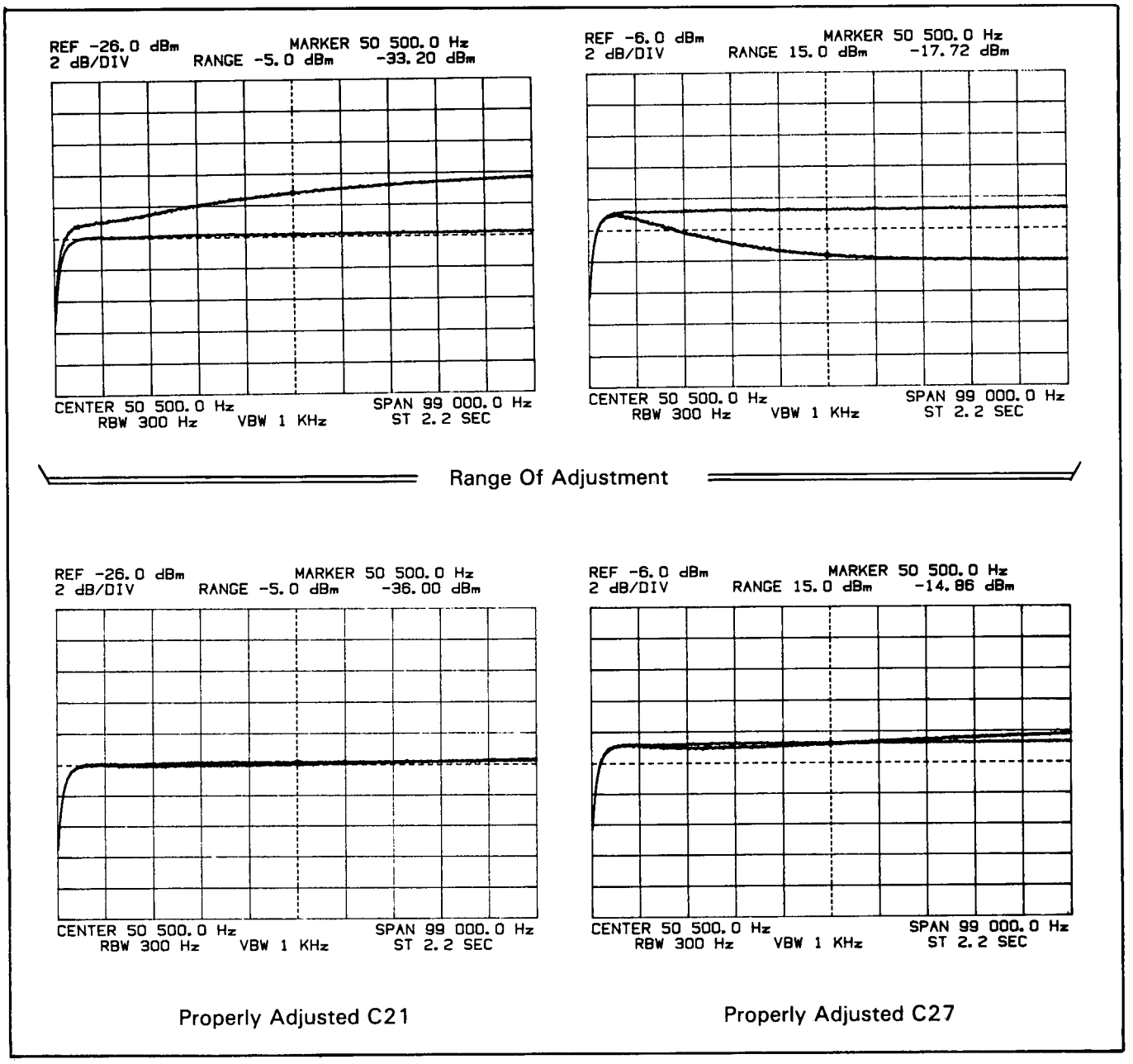


**Figure 5-41. 1MΩ Low Frequency Flatness Adjustment**

## 5-43. 1MΩ Input Capacitance Adjustment

a. Using the same connections as before, set the external attenuator for 40dB of attenuation.

b. Replace the 50Ω termination with a 10kΩ series resistor (±1%, 1/8, HP Part Number 0757-0442). This resistor should be connected as shown in Figure 5-42. Use short clip leads to connect the resistor to the attenuator and the 3585 1MΩ input.

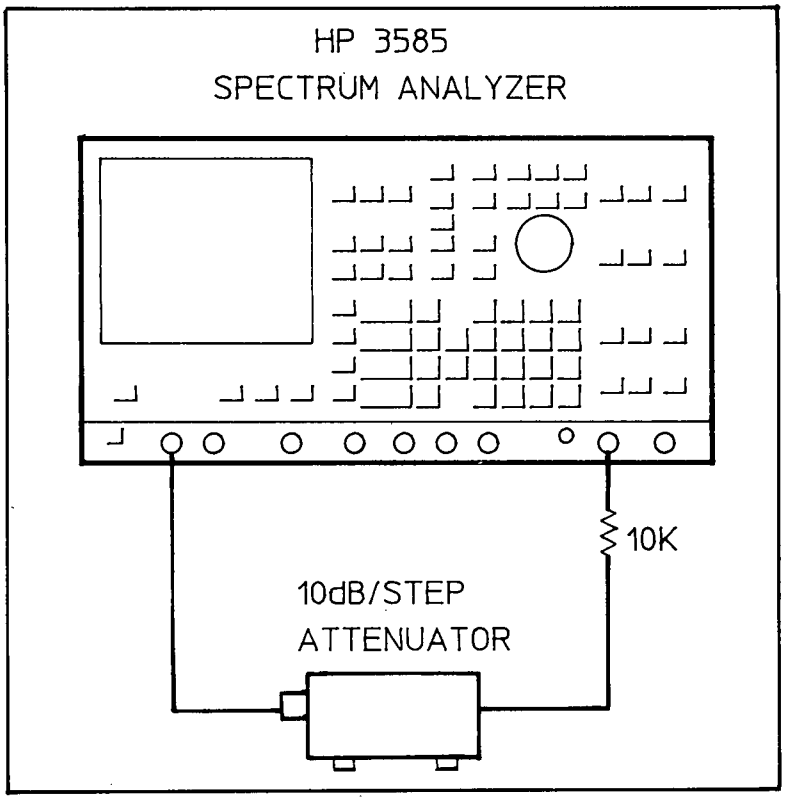


**Figure 5-42 1MΩ Input Capacitance Adjustment Set-Up**

c. Set the 3585 controls for:

RANGE.....-25dBm
START FREQUENCY.....100Hz
STOP FREQUENCY.....1MHz
dB/DIV ..... 1dB

d. Using the Continuous entry Control, adjust the REF LVL so that the trace is centered on the display.

e. Press the STORE A → B key on the 3585.

f. Set the 3585 for a RANGE of -5dBm.

g. Adjust the attenuator for 20dB.

h. Adjust A1C18 so that the A trace overlaps the B trace as closely as possible (see Figure 5-43).

i. Remove all inputs to the 3585.

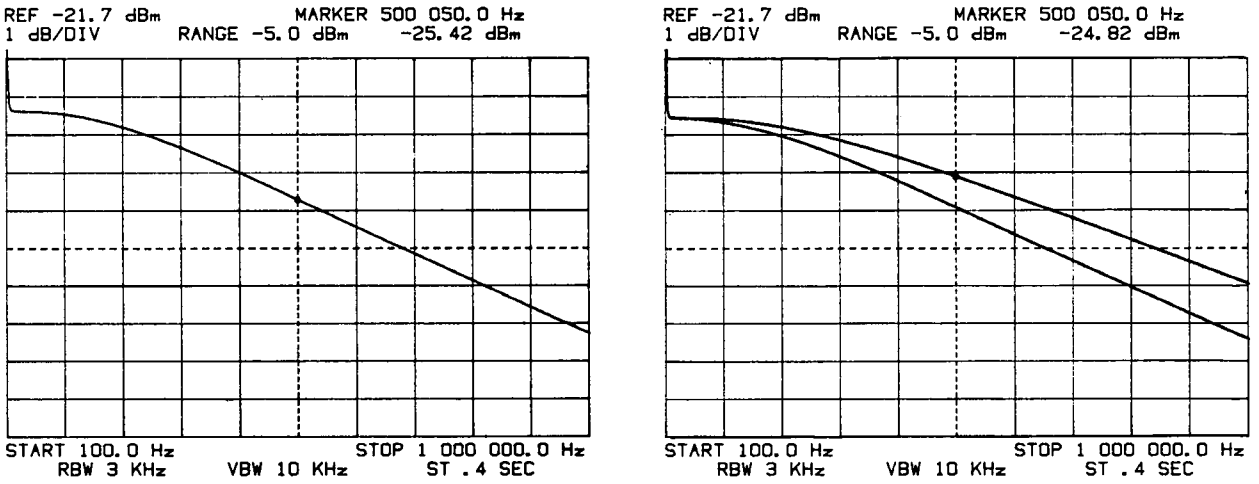


C18 Correctly Adjusted C18 Improperly Adjusted

**Figure 5-43 . 1MΩ Input Capacitance Display**

## 5-44. Local Oscillator Feedthrough Adjustment

a. Enter:

INSTRUMENT PRESET
RANGE ..... 0dBm
MANUAL ENTRY.....0Hz

b. Adjust A1R170 for a minimum marker reading (minimum LO feedthrough). Verify that the marker reads ≤ -15dBm.

## 5-45. Electrical Isolation Test

a. Turn the 3585 power off.

b. Carefully replace the Input/Conversion Section in the 3585 mainframe. Replace and tighten the seven mounting screws.

c. Connect all the *coaxial* cables to the Input/Conversion Section.

d. Before connecting the power supply cable, connect an ohmmeter between the 3585 frame and the screw closest to A1R108.

e. The ohmmeter should read infinite resistance. This indicates that the Input/Conversion Section is properly isolated from dc ground loops. If the ohmmeter shows a shorted condition, check the capacitors on A6a,b,c or d.

f. Remove the ohmmeter.

g. Connect the power supply cable to the Input/Conversion Section.

h. Turn the 3585 power on.

i. Press INSTRUMENT PRESET and check that the instrument calibrates. If it does not, recheck all cable connections to the Input/Conversion Section.

j. Turn the 3585 power off and replace the bottom cover.

## 5-46. Tracking Generator Adjustments

a. Connect a Digital Voltmeter to A51TP2.

b. Adjust A52C50 for +4Vdc ±0.5V.

c. Disconnect the Digital Voltmeter.

d. Using a short length of shielded cable, connect the Tracking Generator output to the Terminated (50Ω) input.

e. Set the Tracking Generator Amplitude control fully clockwise to the detent position (0dBm).

f. Enter:

INSTRUMENT PRESET
RANGE ..... 0dBm
dB/DIV ..... 1dB
REFERENCE LEVEL..... 2dBm

g. Adjust A52C16 for the flattest amplitude response of the Tracking Generator output.

h. Enter:

REFERENCE LEVEL..... 0dBm
SHIFT 4

i. Adjust A52R68 for a marker reading of .00dBm.

j. Disconnect the cable connecting the Tracking Generator to the input. This completes the Tracking Generator Adjustments.

Conversion Side (A2-A5)

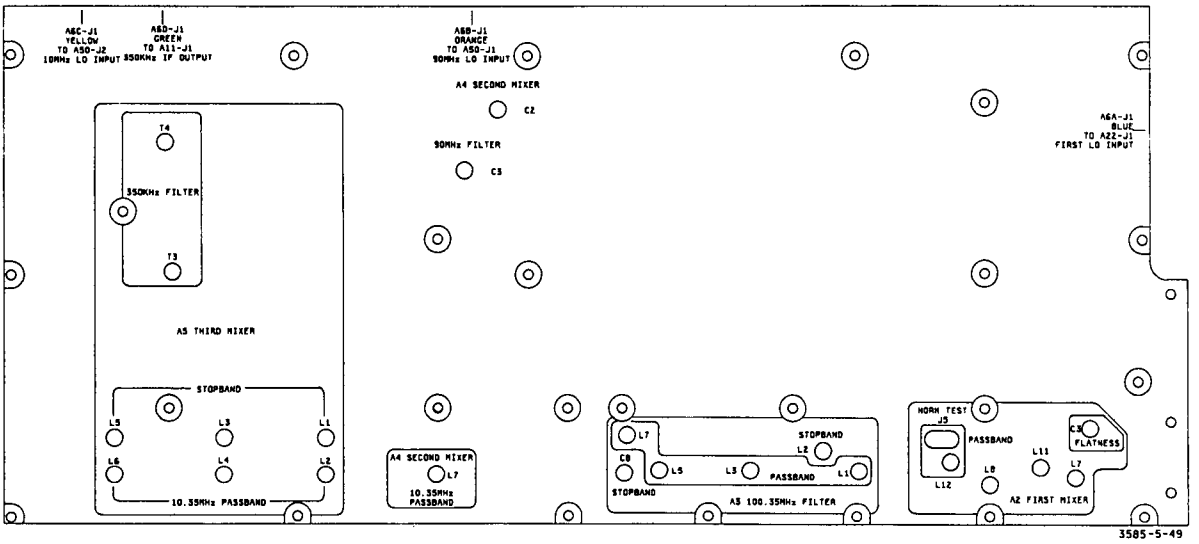


Input Side (A1)

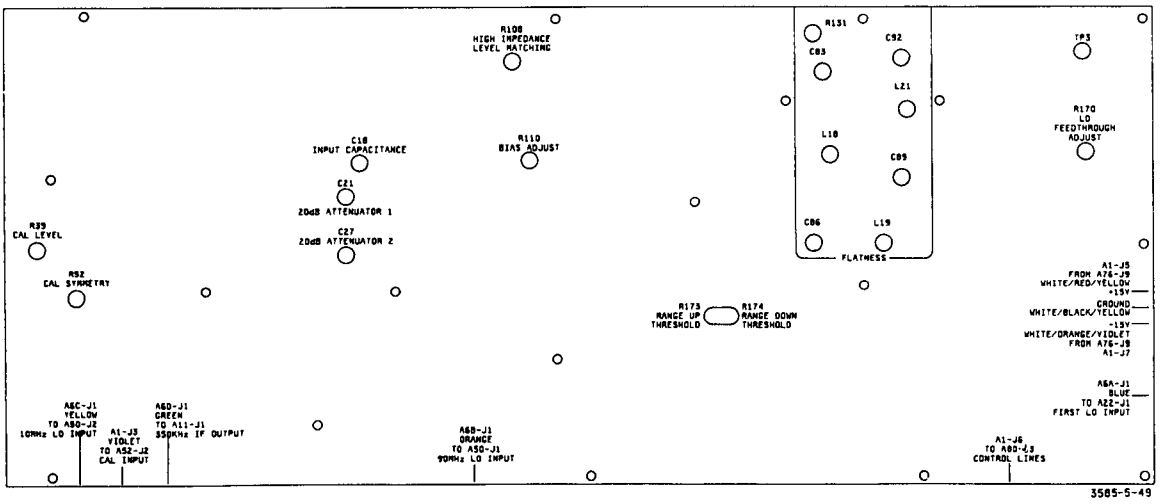


**Figure 5-44 . Input/Conversion Section Adjustment Locations.**

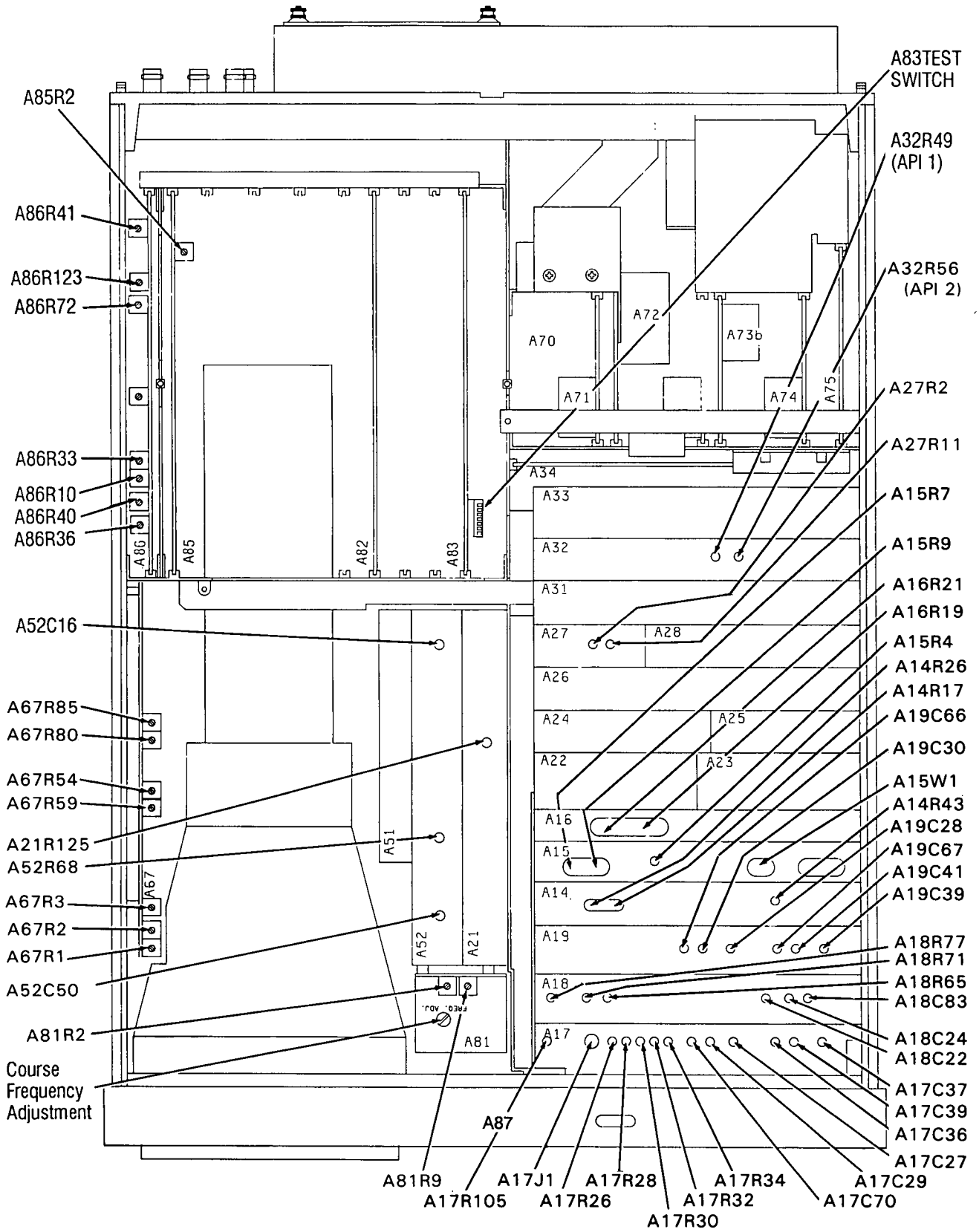


**Figure 5-45. Top of Instrument Adjustment Locations.**

# SECTION VI
# CIRCUIT FUNCTIONAL DESCRIPTIONS

# SECTION VI
# CIRCUIT FUNCTIONAL DESCRIPTIONS

## 6-1. INTRODUCTION

This section contains the functional descriptions of the Model 3585 Spectrum Analyzer circuits. Figure 6-1 illustrates the HP 3585 functional blocks and Figure 6-20 illustrates the detailed blocks.

## 6-2. CIRCUITRY OVERVIEW

The HP 3585 is a 20 Hz to 40.1 Mhz microprocessor controlled spectrum analyzer used for spectrum analysis or network analysis (amplitude only) applications. The HP 3585 is structured as a conventional triple-conversion, swept super-heterodyne spectrum analyzer. Microprocessor control gives the HP 3585 several unique features. The most obvious feature is the keyboard entry of parameters which replaces more conventional knobs. The input attenuation and mixer levels are automatically set by the HP 3585's Auto Range feature to maintain the specified dynamic range. Other microprocessor controlled features include: coupling of Frequency Span, Bandwidth and Sweep Time; centering of signals; moving signals to the Reference Level; and storage of measurement of frequency and amplitude offsets.

The HP 3585's Local Oscillator is fully synthesized using HP's patented Fractional N technique. T his provides frequency settability of 0.1 Hz over the 20 to 40.1 MHz range and stable, repeatable frequency measurements. The Fractional N synthesized Local Oscillator also results in phase-continuous, linear sweeps with low spurious sidebands

The amplitude accuracy of the HP 3585 is enhanced by an Automatic Calibration system, through which internal analog offsets and errors are removed using the internal 10 MHz reference as a level and frequency standard and the Tracking Generator with an internal calibrator as a flatness standard.

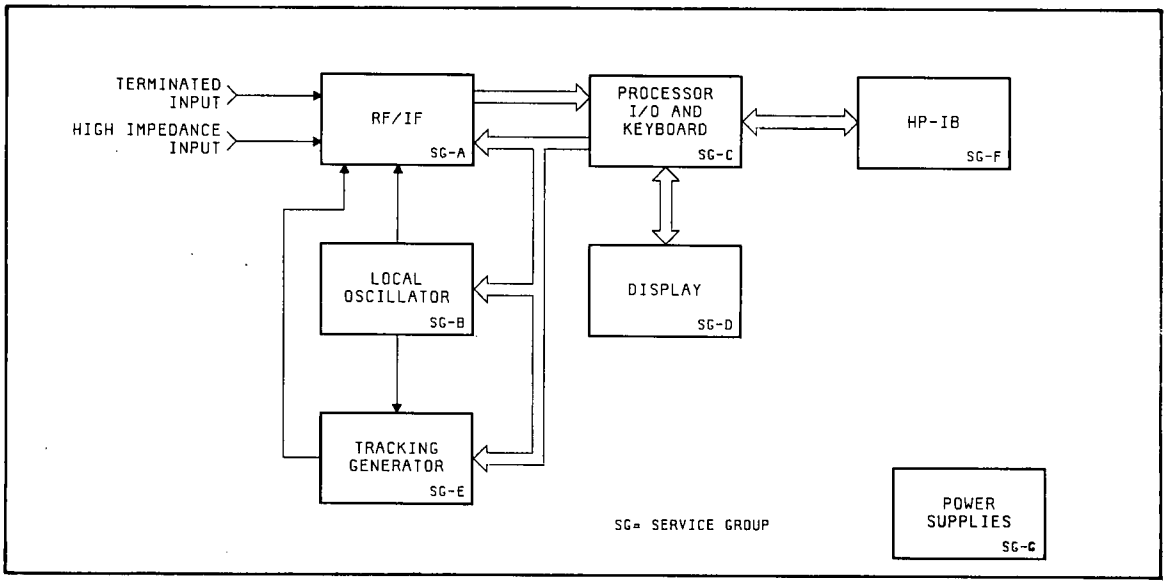


**Figure 6-1. Circuit Functional Block Diagram**

Trace information displayed on the HP 3585 CRT is digitally stored in memory. As a result, flicker-free, non-blooming displays are maintained independent of sweep time. Marker information and entry parameters are displayed above and below the CRT graticule to give the operator the present instrument status.

The HP 3585 keyboard controls are completely programmable via the HP-IB. In addition, commands are available to output information such as: keyboard settings, instrument status, A or B trace data, marker amplitude and frequency, and CRT alphanumerics.

## 6-3. SPECTRUM ANALYSIS OVERVIEW

Fourier showed that any real elecrical signal that is periodic may be express as the sum of amplitude-weighted, phase-shifted sinusoids. What this means is that square waves, triangles waves, ramps, and the like are composed of an addition of pure sine waves. Yet looking at a square wave in the time domain yields no apparent clue as to what these spectral components are. A spectrum analyzer is designed to perform this transformation from "time domain" to "frequency domain".

Swept analysis is one way of extracting frequency domian data from a time domain signal. The concept behind swept spectrum analysis is to take a filter with a bandwidth that is small relative to the frequency range of interest and "sweep" the filter across that frequency range. In this way the filter allows you to pick out individual frequency components, or "spectral lines" as they are often called.

In reality, it is more effective to have a stationary intermediate frequency (IF) filter and to sweep the input signal past the filter by mixing the input with a sweeping voltage controlled oscillator. This process is exactly what the HP 3585 Spectrum Analyzer does.

## 6-4 . CIRCUITRY OVERVIEW

Figure 6-1 is a circuit functional block diagram of the HP 3585 Spectrum Analyzer. Each block shown represents a group of circuitry known as a Service Group (SG). Service Groups represent a logical division of the instrument's circuitry into areas of related operation. This section on Circuit Functional Descriptions, and Service Information will be organized around the Service Groups shown in Figure 6-1, Circuit Functional Block Diagram. Figure 6-20, 3585 Detailed Block Diagram, contains much more detail and can be found at the end of this manual section.

## 6-5. RF/IF (SG-A)

The RF/IF section of the 3585 allows the instrument to accommodate a wide variety of signal sources and a wide dynamic range of input signals. Input impedances of 50Ω, 75Ω and 1 MΩ are available. The input signal is processed by a series of attenuators and amplifiers so that it comes within the level range required by the instrument.

After the input signal is at the proper level, it is mixed down to a frequency that is at the center of the intermediate frequency filter. This is accomplished through a series of mixers that mix the input signal with a sweeping signal from the Local Oscillator such that the entire frequency range of interest will, piece by piece, be allowed to pass through the intermediate frequency filters and subsequently be detected.

Once the signal is mixed down it goes through the intermediate frequency filters. This series of multiple selective filters allow only a relatively small band of frequencies through, allowing individual frequency components to be measured.

The filtered signal is then compressed by the Log Amplifier so that the wide analog amplitude range of the filtered signal is converted to a more usable logarithmic scale.

To aid in the display of the frequency domain information, a Video Filter is added. This filter basically smooths out the display.

Finally, the completely processed input signal is analog-to-digital (A/D) converted and sent to the processor for processing and subsequent display.

## 6-6. Local Oscillator (SG-B)

The Local Oscillator section is centered around a very stable 10 MHz temperature controlled crystal oscillator reference and a Fractional N Synthesizer. The synthesizer loop operation is a function of resolution bandwidth as selected from the instrument front panel. Full loop operation will be discussed later in this manual section.

Essentially, the Local Oscillator section produces the sweeping LO signal, and two fixed LO signals used in the mixing process of the RF/IF section of the instrument. Also generated is a reference signal and a sweeping signal used by the Tracking Generator section of the instrument.

## 6-7. Processor, I/O and Keyboard (SG-C)

This section of the instrument performs all calculations and controlling functions necessary for the operation of the instrument. Included within this section is ROM, RAM, input/ output (I/O) control, keyboard, and the central processor.

The heart of the central processor is a hybrid device used in many desktop computers and larger computer systems. ROM provides a complete operating system to the processor-controlled instrument. RAM is used by the processor as needed, and can also be used to store front panel configurations.

The I/O portion of this section controls all interfacing between the processor and other portions of the instrument. All display functions, keyboard monitoring, RF/IF controlling, and local oscillator control is handled through the I/O portion of the processor. Devices that are not controlled via the I/O are ROM, RAM, Counter and HP-IB

The Counter is a 24-bit counter that measures the frequency of the signal that is producing the response on which the marker is positioned. Counter input is from the IF section and the 10 MHz reference. Counter output is via bus to the processor.

The keyboard is constantly monitored by the processor via the I/O. Pressing a switch on the keyboard generates a priority interrupt to the processor and the keyboard is serviced as required.

## 6-8. Display (SG-D)

The Display section of the instrument has its own processor and is interfaced to the central processor via the I/O. The display processor controls all display operations as well as display and plotter output functions.

## 6-9. Tracking Generator (SG-E)

The Tracking Generator's primary purpose is to generate a sweeping 0 to 40 MHz signal that tracks the sweeping LO signal. The Tracking Generator output is found on the instrument front panel.

The Tracking Generator section also controls the signal that goes into the calibrator circuitry of the RF/IF section. The signal to the calibrator is either a 10 MHz reference signal or the Tracking Generator output.

## 6-10. HP-IB (SG-F)

The instrument central processor is interfaced to the "outside world" via the HP-IB section. The HP-IB section has its own processor and is directly connected to the instrument main processor via the IOD bus.

An HP-IB connector is provided at the rear panel of the instrument. This connector is used to connect the instrument to other instruments, plotters, printers and controllers which have HP-IB (IEEE488) capability.

## 6-11. Power Supplies (SG-G)

The Power Supply section generates all dc voltages and controls their distribution. The dc voltages generated are +7.7V, +5V, +18V, and -18V.

## 6-12. RF/IF DESCRIPTION (Service Group A)

The RF/IF section is the second largest section in the instrument. It performs signal conditioning on the input signal from the time a signal enters the instrument until it is A/D converted for the processor. This section can be divided into six subsections. They are:

| | |
|---|---|
| INPUT | LOG AMPLIFIER |
| CONVERSION | VIDEO FILTER |
| IF | A/D CONVERTER |

Each of these subsections will be discussed in more detail. For the discussions that follow, you should refer to Figure 6-3. RF/IF Block Diagram in this manual section and the Service Group A schematic drawings .

## 6-13. Input (A1)

The Input provides two major signal paths. One is the 50Ω/75Ω terminated input and the other is the 1 MΩ input. Signals entering at the terminated input are monitored by an overload detector. If an overload is detected, an interrupt flag is set high and signals the processor. When the flag line is set high, it also causes a "dummy load" to be switched into the input path to prevent circuitry damage. The impedance switching determines the input termination impedance as selected on the front panel or via HP-IB programming.

Attenuator selection is made in accordance with the range setting. Attenuator control is from the processor via a series of opto-isolators to the relay coils. For example: A Range setting of -25 dBm removes all attenuators from the signal path. A Range setting of -20 dBm attenuates the input signal by 5 dBm.

In the 1 MΩ signal path, the attenuators operate in an identical manner and simultaneously with the 50Ω/75Ω attenuators. The 1 MΩ Buffer provides impedance matching for the 1MΩ input. This buffer is also used to insure a 0 Vdc offset on the signal path. This is required because of dc coupling used later on in the circuitry.

The Autoarange Detector monitors the signal level out of the 11 dB amplifier. The detector is a comparitor circuit that compares the input signal to a range up and a range down threshold. The results of this comparison is monitored by the processor and the input attenuators are set such that the largest frequency component is at or very near the top of the display screen.

## 6-14. Conversion (A2 thru A5)

The Conversion section of the instrument provides all the mixing required to process the input signal to a frequency of 350 kHz as required by the IF section. The conversion process includes three mixing processes. First the input signal is mixed with a sweeping local oscillator (LO) signal, then two additional times with fixed LO signals.

Mixing begins on the A2 First Mixer board by mixing the 0 to 40 MHz input signal with a local oscillator that sweeps from 100.35 MHz to 140.35 MHz. Prior to entering the ringdiode mixer, the sweeping LO is processed by a limiter to ensure that it is at the proper level required by the mixer. It can be seen that as the LO sweeps from 100.35 MHz to 140.35 MHz, the entire frequency range of interest (0 to 40 MHz) will at some time be mixed to 100.35 MHz and be allowed through by the 100.35 MHz passband filter. Note that the passband filter is located on both the A2 board and the A3 board.

The A3 100.35 MHz IF Filter board provides filtering and buffering for the first IF frequency. The 79.65 MHz notch filter eliminates any 79.65 MHz signal being generated by the first mixer stage. The buffer provides isolation between the first mixer and subsequent circuits.

The A4 Second Mixer board provides the second phase in the conversion process. The first IF frequency signal is mixed with a limited and filtered 90 MHz LO signal to produce the second IF frequency of 10.35 MHz. Before mixing, the 90 MHz LO signal is filtered to

eliminate any 10 MHz sidebands that may exist. The 10.35 MHz second IF frequency is then bandpass filtered before going to the third mixer stage. A 9.65 MHz notch filter eliminates any 9.65 MHz signal being generated by the second mixer stage.

The A5 Third Mixer board provides the final phase of conversion. A 10 MHz LO signal enters the A5 board and is filtered and limited before reaching the final mixer. The 10 MHz LO signal and the 10.35 MHz second IF frequency signal are mixed to get the final IF frequency of 350 kHz. The final IF frequency is bandpass filtered and then goes to the IF section of the instrument.

### 6-15. IF (A17 thru A19)

The IF section has two primary purposes. The first is to filter the input signal, which is now at 350 kHz, to the desired resolution bandwidth (RBW), and the second is to provide the necessary gain and attenuation for proper leveling of the input signal. This is accomplished using three circuit boards consisting of five filter stages, an input amplifier, and 8 dB amplifier, three 16 dB amplifiers and an attenuator settable in 4 dB steps from 0 dB to 12 dB.

Due to the wide range of resolution bandwidths (RBW)available, three filter paths are used. They are a straight through path for the 30 kHz RBW; a path containing five LC filter stages for RBWs of 10 kHz, 3 kHz, and 1kHz: and a path containing five crystal filter stages for RBWs of 300 Hz, 100 Hz, 30 Hz, 10 Hz and 3 Hz.

The input signal, now at 350 kHz, enters that IF section of the instrument at the A17, IF Filter No.1, board. Here the signal goes through an input amplifier with a gain of approximately 2.5 dB. Then a path is chosen depending on the resolution bandwidth (RBW) selected. The voltage to current (V to I) and current to voltage (I to V) converters in the crystal filter path simply convert the input voltage signal to the current signal required by the crystal stages, and then back to a voltage signal again. The bandwidths of the crystal filter stages are determined by the loop resistance. For example, in the first crystal stage different combinations of resistance are switched into the circuit to determine the bandwidth. Since the resistance switched into the circuit for a narrow RBW is small, an appreciable amount of signal current is lost through that resistor and does not flow through the crystal (the series R the crystal is about 150Ω). This insertion loss is compensated for by selecting different emitter resistors in the V to I converter in such a way that the correct amount of current is always transferred through the crystal. The signal, after passing through the first two filter stages, is buffered and continues onto the A18, IF Gain, board.

The LC and crystal filter stages on the A18 board are essentially the same as those on the A17 board. After the signal is filtered on the A18 board, it passes through the 8 dB fixed gain amplifier, the step attenuator (0, 4, 8, or 12dB of attenuation) and a series of three 16dB amplifiers (0, 16, 32, or 48dB of amplification). This set of amplifiers and attenuators determine the reference level relative to the range.

To help in understanding the attenuator and amplifier operation on the A18 board, consider the following:

RANGE = REF LVL = input signal = -25 dBm

This condition will result in the signal appearing at the top of the display screen. Looking at the graph in Figure 6-2, you can see that there is 8 dB of attenuation switched into the circuit. This nullifies the gain provided by the 8 dB amplifier. The net result is no gain or at-

tenuation of the signal as it passes through the A18 board. Now change the input signal to -45 dBm. As you can see in the graph, 16 dB of gain and -4 dB of attenuation are switched into the signal path. If you recall the 8 dB fixed gain amplifier, you can see that 20 dB of gain has been provided. Thus the input signal continues to appear at the top of the screen.

Finally, the input signal is buffered and is sent onto the A19, IF FIlter No.2, board for final IF filtering and processing.

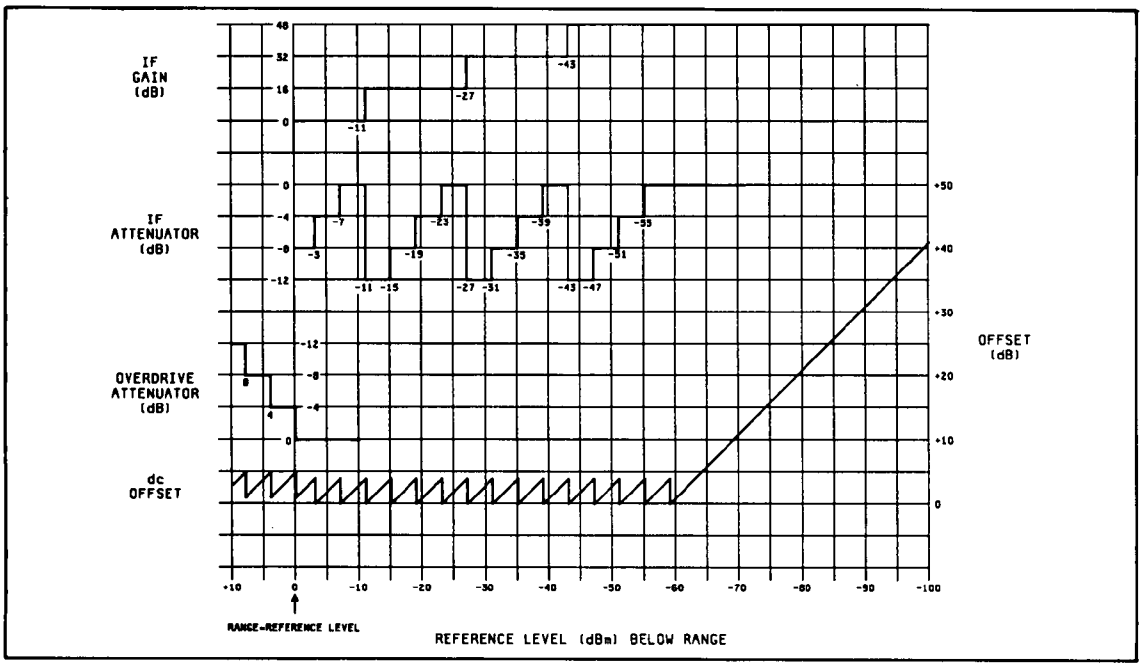


**Figure 6-2. IF Gain and Attenuation Graph**

As the input signal enters the A19 IF Filter No. 2 board, it passes through the Overdrive Attenuator. During normal operation this circuitry acts as a unity gain amplifier. An overdrive condition exists when the reference level (REF LVL) is greater than the Range. Since gain was needed when the reference level was greater than the Range, attenuation is needed in the overdrive condition. This attenuation is provided by the Overdrive Attenuator (0, 4, 8, or 12 dB of attenuation is available). After overdrive attenuation the signal enters the Overdrive Limiter so that the amount of overdrive is limited to a fixed limit. The remainder of the A19 board functions like the filter stages of the A17 board.

## 6-16. Log Amplifier (A14)

The A14, Log Amplifier, board's primary function is to convert the linear IF signal to a log signal. The signal input level to the log amplifier is critical; therefore, as the IF signal enters the A14 board, it passes through a variable gain amplifier. This amplifier is adjusted to provide the signal level required by the log amplifier. After amplification, the signal passes through a 350 kHz bandpass filter (30 kHz RBW filter) before entering the log amplifier. Once the linear signal is converted to a log signal, it passes through a 600 kHz low pass filter (LPF) to rid it of any harmonic content. Finally, there is an averaging detector which actually rectifies the log signal and capacitively stores it. The output of the log amplifier is a rectified log version of the input signal.

The linear IF signal after passband filtering goes to the IF Output on the rear panel of the instrument, and the ac log signal goes to the A83, Counter, board.

## 6-17. Video Filter (A15)

The A15, Video Filter, board performs three functions: adds required dc offset, provides video filtering, and generates dB/DIV amplification as needed.

Before discussing the circuitry of this board, an explanation of dc offset is needed. If you will recall, the gain and attenuation stages in the IF Section provided only a 4 dB resolution in input signal processing. The instrument, however, is capable of reference level resolution to tenths of a dB. The dc offset gives this additional resolution. For example, consider a reference level of -25 dBm and an input of -26 dBm. Now change the reference level to -26 dBm. Somehow the signal has now got to appear at the top of the screen. What happens is that 1 dB of gain is programmed into the dc offset D/A converter and is presented to the summing amplifier to be added to the signal coming from the A14 board. The various amounts of dc offset are illustrated by the bottom plot of the graph in Figure 6-2.

The input signal comes into the Video Amplifier board from the A14 Log Amplifier. This signal is then summed with the required dc offset. The output of the summing amplifier is 5 volts for a full scale input and varies 50 mV/dB. Thus a signal that is 100 dB down from full scale would yield 0 volts at TP3 using a 10 dB/DIV front panel setting.

The signal then goes through the video filter. This filter is a single pole RC network with different resistance and capacitance switched into the circuit for the different video bandwidths (VBW). Finally the signal goes through the dB/DIV amplifier that provides the gain corresponding to the display scale selected. A Video Output to the back panel of the instrument is also made available.

## 6-18. A/D Converter (A16)

The signal enters the A16, A/D Converter, board and is peak detected. Basically, this detector allows the peak holding capacitor to be charged up through a diode. Should the input signal decrease during the sample period, the diode does not allow the capacitor to discharge, thus the peak is retained and passed on to the sample and hold circuit. The output of the sample and hold circuit is amplified and then passed on to the A/D converter.

The A/D converter uses a successive approximation technique for the conversion. The out-put of the A/D converter is a 10-bit approximation of the input analog signal to the A/D converter. The digital data goes to the A83, I/O, board and from there to the instrument central processor.

Each A/D conversion cycle begins when the IADC (initiate A/D conversion) line goes low. Each conversion cycle takes approximately 200 usec. The cycle begins by allowing the peak detector to sample the input signal. This peak value is then read by the sample and hold circuit. The peak detector is then reset to prepare for the next peak. The voltage held by the sample and hold circuit is amplified and sent to the A/D converter for conversion.

**Circuit Board Designator**
**To**
**Schematic Drawing Number**
**CROSS REFERENCE**

| Circuit Board Designator | Schematic Drawing Number* |
|---|---|
| A1 | A-1a, A-1b |
| A2 | A-2 |
| A3 | A-2 |
| A4 | A-2 |
| A5 | A-2 |
| A14 | A-4 |
| A15 | A-5 |
| A16 | A-6 |
| A17 | A-3a |
| A18 | A-3b |
| A19 | A-3c |

*See Section 10 for schematic drawings.

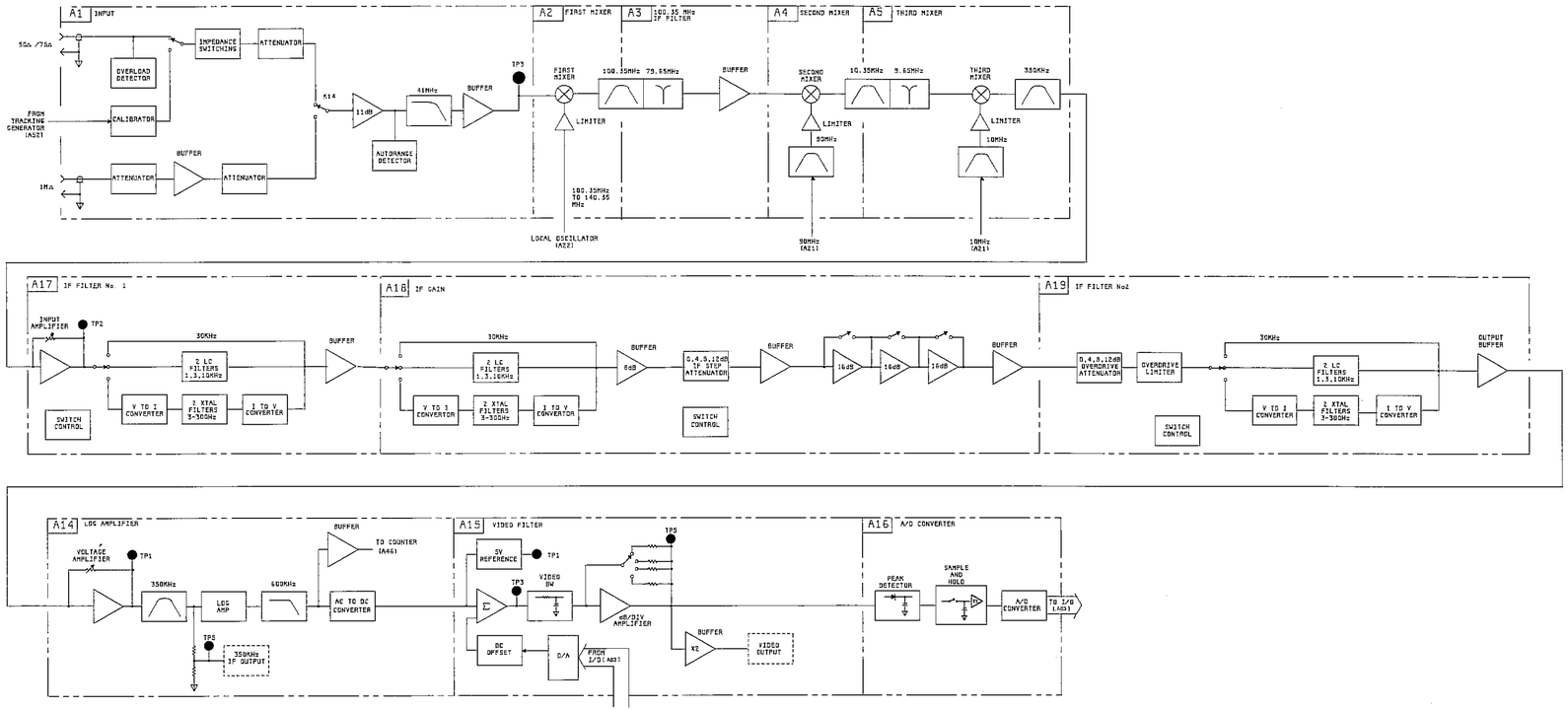


**Figure 6-3. RF/IF Block Diagram**

## 6-19. LOCAL OSCILLATOR DESCRIPTION (Service Group B)

The Local Oscillator section is the largest single operating section within the instrument. It provides all fixed reference signals used for mixing in the IF conversion section and for clocks in other portions of the instrument. It also provides sweeping signals for the Tracking Generator and for mixing in the IF conversion section. This section is divided into five subsections. They are:

| | |
|---|---|
| REFERENCE | FRACTIONAL N LOOP |
| SUM LOOP | LO CONTROL |
| STEP LOOP | |

Each of these subsections will be discussed in more detail. For the discussions that follow, you should refer to Figure 6-12. Local Oscillator Block Diagram in this manual section and the Service Group B schematic drawings .

There are two modes of operation for the local oscillator. The actual mode of operation is dependent on the selected resolution bandwidth (RBW). For resolution bandwidths of 10 kHz and 30 kHz, the local oscillator operates in the single loop (SL) mode. For all other resolution bandwidths, the local oscillator operates in the multiple loop (ML) mode. The reason for this is that there is more noise on the LO signal in the single loop mode and while this is allowable for the large resolution bandwidths, it is too much noise for the smaller resolution bandwidths. The multiple loop is constructed such that the local oscillator noise is minimal.

Before discussing each subsection of the local oscillator, let's examine the LO section as a whole. Since the local oscillator is based on phase lock loop (PLL) operation, a short review of PLL will be given first. Figure 6-4. Basic PLL shows the traditional PLL configuration. The voltage controlled oscillator (VCO) output is compared with a reference frequency by using a phase detector. The phase detector generates an output pulse proportional to the the phase difference between the reference frequency and the VCO frequency. This output pulse is low pass filtered and integrated to become the dc correction voltage for the VCO.

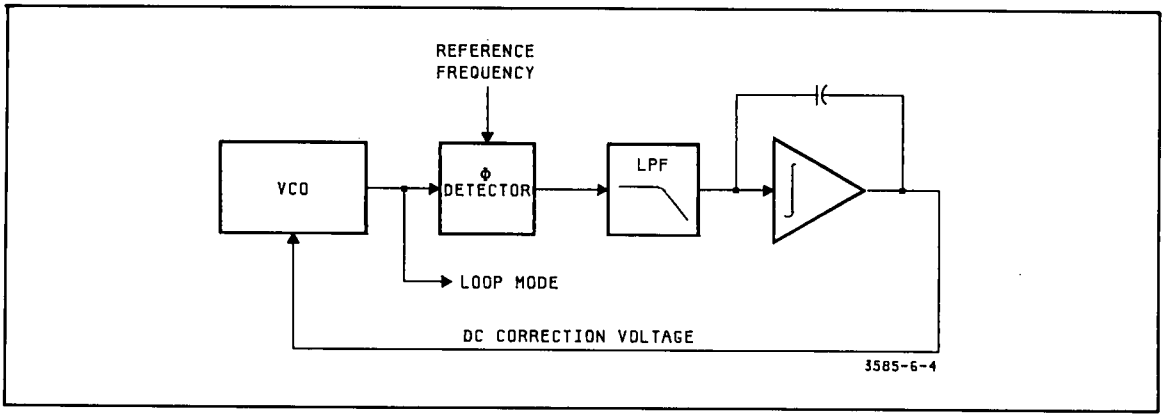


**Figure 6-4. Basic PLL**

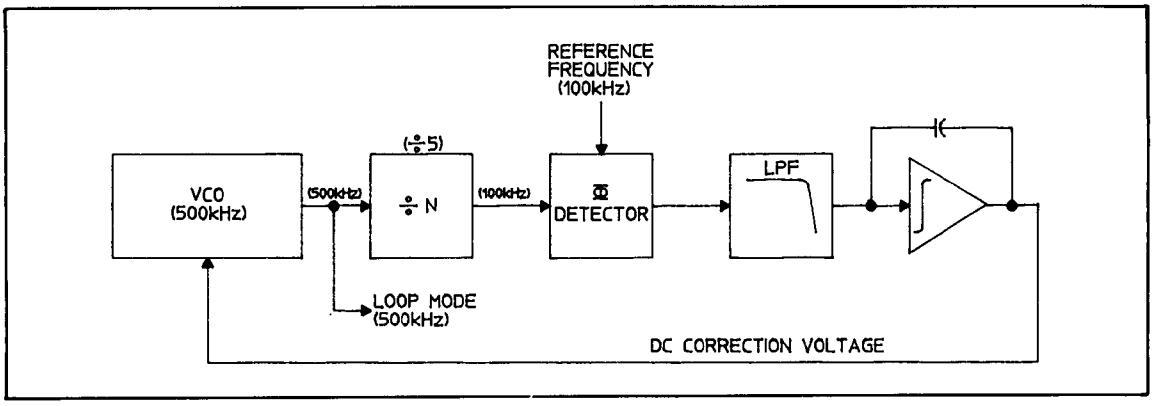


**Figure 6-5. ÷N PLL**

In order to generate different frequencies from a single loop, a divide by N (÷N) stage is inserted at the input to the phase detector. ( See Figure 6-5 ). By programming N properly, one can generate various frequencies from the VCO. For example: If the reference frequency is 100 kHz and you want the VCO to run at 500 kHz, a ÷5 circuit is added just before the phase detector to produce a 100 kHz input signal to the phase detector. With both inputs to the phase detector at 100 kHz, the dc correction voltage will remain stable and therefore the VCO output will remain fixed at 500 kHz.

Fractional N (FRAC N) is an extension of this ÷N Phase Lock Loop concept and will be developed more fully later. For now, think of FRAC N as a high resolution ÷N PLL.

With these concepts in mind, let's examine the block diagrams of the two operating modes of the local oscillator. Single loop operation of the LO is shown in Figure 6-6. Single Loop Block Diagram. As you can see, it is fairly simple and conforms to the basic ÷N type phase lock loop. Again, this simple loop is capable of generating all the necessary frequencies but the output is too noisy to be used with the small resolution bandwidths.

Multiple Loop is slightly more complex and will be presented in two forms. Figure 6-7 Multiple Loop Block Diagram (basic),shows that multiple loop operation is actually three interacting PLL's. Using the numbers in parentheses as a guide, a discussion of the multiple loop operation, assuming a local oscillator output of 100 MHz, will be given.

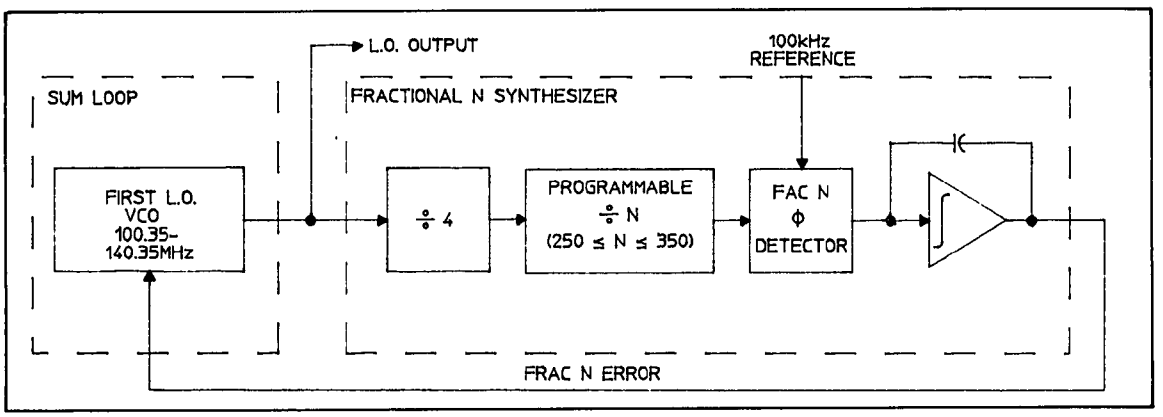


**Figure 6-6. Single Loop Block Diagram**

The main phase detector in this circuit will only compare frequencies of 1.75 MHz to 3.00 MHz, so a Step Loop frequency is mixed with the LO output to bring it down into the proper range for the phase detector. For our example, the Step Loop frequency is 98 MHz so the mixer output is 2 MHz. The Fractional N Loop, while operating in multiple loop, will generate a variable reference frequency with a range of 1.75 MHz to 3.00 MHz (after being divided by 20). The phase detector then compares the phases of the two 2 MHz inputs and outputs a voltage proportional to any difference that may exist in their frequencies. This dc correction voltage is summed with the dc correction voltage from the Step Loop (since the 98 MHz from the Step Loop had been subtracted from the 100 MHz LO frequency) and with the Fractional N Loop error voltage (this is normally zero but will correct for an unsettled Fractional N VCO output) to form the dc tuning voltage to control the First LO VCO.

Figure 6-8. Multiple Loop Block Diagram (detailed) shows all the loops involved in greater detail. The three PLL's shown in the two figures comprise three of the groups into which we will split the local oscillator: Sum Loop, Step Loop and Fractional N Loop. The discussions that follow will be concerned with the three individual loops rather than the entire local oscillator. It is suggested that you review the basic block diagrams once again to make certain that you understand how the blocks fit together.

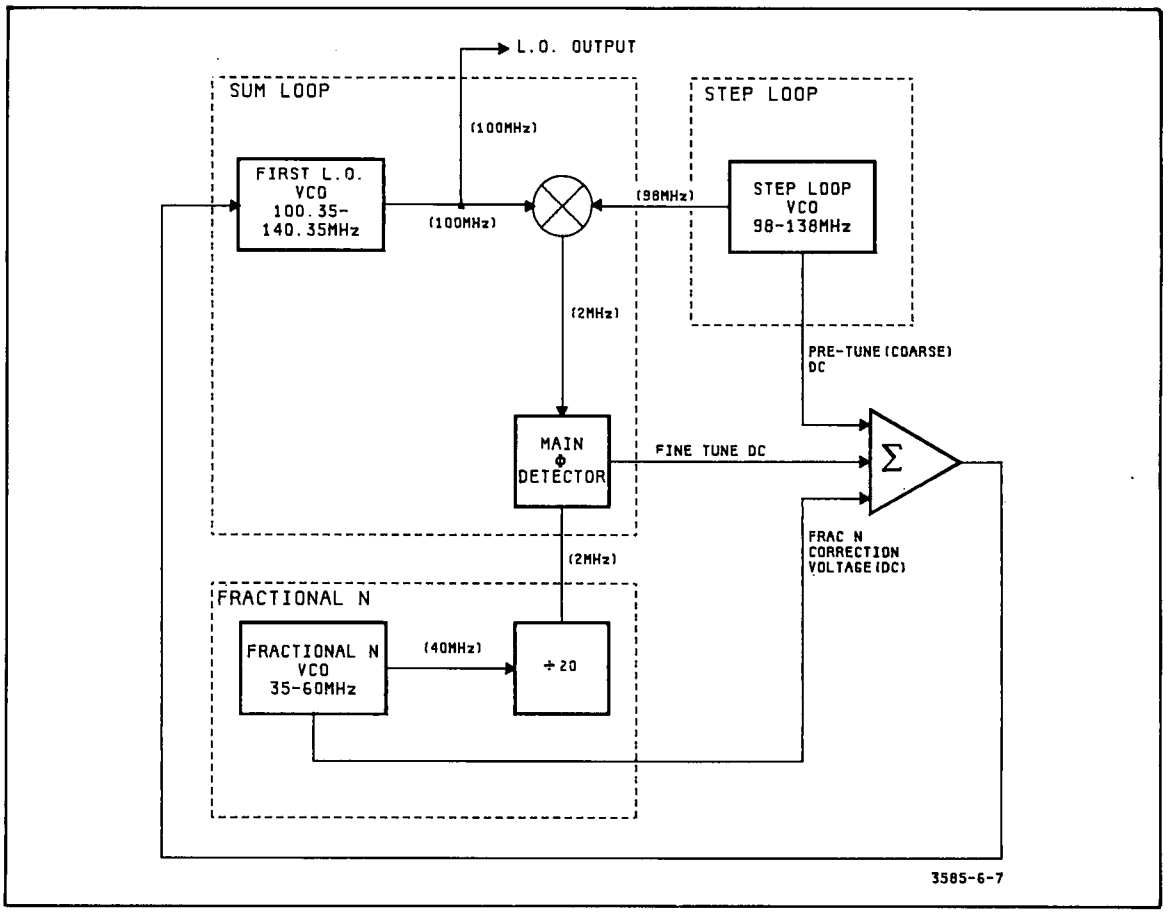


**Figure 6-7. Multiple Loop Block Diagram (basic)**

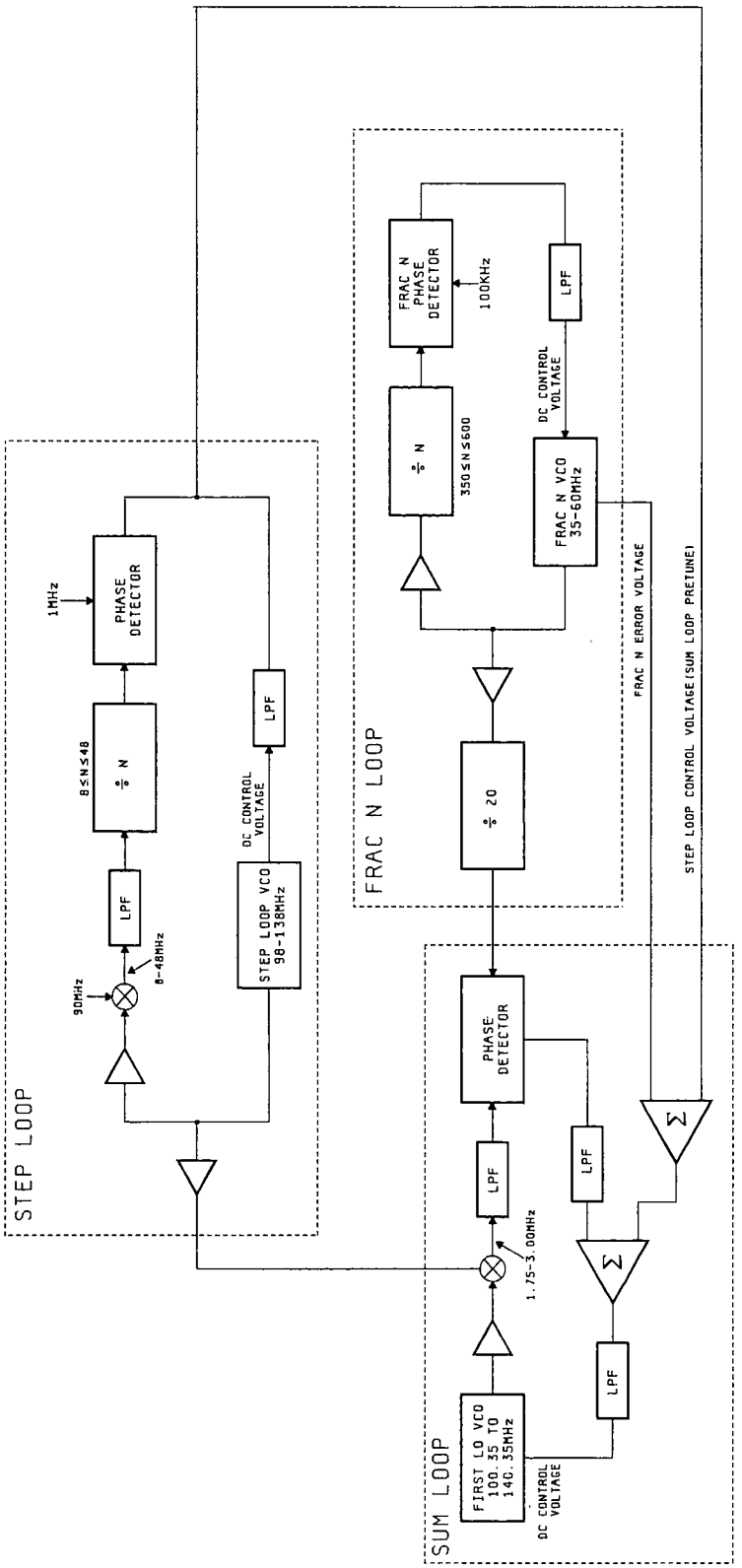


**Figure 6-8. Multiple Loop Block Diagram (detailed)**

## 6-20. Reference Section (A21 and A81)

The A81 boad is simply an oven oscillator that produces a stable 10 MHz reference for use internal to the instrument. The main part of this circuit is the oven oscillator. The oscillator output is controlled by a "switch" that, when properly adjusted, allows time for the oven to heat up before allowing the 10 MHz signal off the board. When the instrument is first turned on, the heater in the oven oscillator draws a very high current from the 15V1 source, pulling its voltage to something below 15 volts. A comparator circuit then switches the 10 MHz output off. When the heater reaches proper operating temperature, it draws less current thus allowing the comparator to close the switch.

It was stated earlier that the local oscillator section contains three PLL's. In fact, a fourth PLL exists in the Reference Section on the A21 board. The basis of this board is a simple PLL with a fixed ÷9. The VCO is a 90 MHz crystal oscillator. Its output is divided by nine and then fed into a phase detector where it is compared with an external 10 MHz signal, which usually comes from the A81 via a connector on the rear panel. The remaining circuitry on this board is gating and level adjustment circuitry used to achieve the signals required elsewhere in the instrument. There is also a ÷100 to get a 100 kHz output.

## 6-21. Sum Loop (A22, A24, A25, A27 and A28)

The Sum Loop provides the local oscillator output frequency of 100.35 to 140.35 MHz by bringing together all three loops involved in mulitple loop operation. Thus the name, Sum Loop. You should note that the Sum Loop is not operational during single loop operation, with the exception of the A22 board which is the first LO VCO during single loop operation.

A22 begins with an oscillator whose frequency is determined by the First LO VTO Tune In. This tuning voltage determines the value of the vari-caps, which in turn determine the frequency of the oscillation. The oscillator output then goes through a gain amplifier (approximately 7 dB) and through two buffers. One output then goes to the Input Section (A2) and the other goes to the next board in the Sum Loop, A24, First LO Buffer.

A24 is the First LO Buffer and its purpose is to buffer the LO signal and split it into three outputs. One buffered output (top buffer on the schematic) goes to the ÷4 circuit on A31 of the Fractional N Loop. Notice that this buffered output can be switched on for single loop and off for multiple loop. The other two buffered outputs are always on. One of them provides a signal for the Tracking Generator (A52) and the other for the next board in the Sum Loop, A25, Sum Loop Mixer.

The A25, Sum Loop Mixer, board receives the 100.35 to 140.35 MHz LO signal from the A24 board and the 98 to 138 MHz Step Loop signal as inputs. It buffers each input signal and them mixes them to get a 1.75 to 3.00 MHz result. It then runs the resultant signal through a low pass filter and gain amplifier before it sends it on to the next board in the Sum Loop, A28, Sum Loop Phase Detector.

The A28, Sum Loop Phase Detector, board receives the 1.75 to 3.00 MHz signal from the A25 board and the 1.75 to 3.00 MHz signal from the Fractional N Loop as inputs. The input from the A25 board is squared up in the shaper. The two inputs are then compared in a phase detector whose output is a pulse with a width proportional to the difference in phase between the two inputs. This pulse train then goes through a low pass filter and a buffer/limiter to the next and last board in the Sum Loop, A27, First LO VTO Control.

A28 also has a lock detector circuit which checks the tuning voltage to see that it falls within ±0.27 volts. A tuning voltage outside of this range indicates an unlocked condition in the Sum Loop. Finally, the (H)SLSCN signal (Single Loop Scan, high for single loop (SL) and low for multiple loop (ML)) is converted from SL = +3.8V and ML = 0V to SL = -15V and ML = +14V for mode switch control.

The A27, First LO VTO Control, board is where all of the tuning voltages from the various loops are summed together in order to generate a single tuning voltage for the First LO VCO. When in single loop, the tuning voltage is determined by the Fractional N Loop error tuning voltage alone. The Step and Sum Loops are not involved as such. In this case (SL), the Fractional N Loop error voltage enters the board, passes through a buffer , some scaling and a unity gain amplifier. In single loop, Q8 acts as a closed switch (whereas Q7 is open) and allows the tuning voltage to pass to the VTO (A22) of the Sum Loop.

In multiple loop, Q7 is closed and Q8 is open. The Sum Loop Pretune (which is the tuning voltage from the Step Loop) and a scaled down Fractional N Error voltage are summed together and filtered to smooth the result and rid it of its high frequency components. The filtered result is then summed with the Sum Loop Error voltage from A28. Q7 allows this final result to pass on to the First LO VTO (A22).

### 6-22. Step Loop (A23 and A26)

The Step Loop provides a signal from 98 to 138 MHz in 1 MHz steps. It is based on a simple ÷N PLL and much of it is very similar to what we have already seen. In fact, A23 is almost identical to the A22 board in the Sum Loop. The only difference is some biasing. A23 is an oscillator, gain amplifier, and a pair of buffered outputs. One output goes to the Sum Loop and the other goes to the next board in the Step Loop, A26, Step Phase Detector.

The A26, Step/Phase Detector, board has three inputs. One is from the A23 board (98 to 138 MHz), a second from the A21 Reference board (90 MHz). These two inputs are buffered, then mixed to get a resultant output frequency from 8 to 48 MHz. This signal is then low pass filtered to rid it of its high frequency components and is shaped to get more of a square wave. This square wave then enters a programmable ÷N counter. N is an integer from 8 to 48 and is programmed to always yield an output of 1 MHz. This 1 MHz signal is then phase-compared with the third input to this board. The third input signal is a 10 MHz reference, from the A21 board, that has gone through a ÷10 counter to yield 1 MHz.

The phase detector outputs a pulse whose width is determined by the difference in phase of the two input signals. This pulse then enters an integrator and sample and hold circuit. The output from the sample and hold circuit is buffered, exits the board and feeds back to A23 to tune the Step Loop VCO. Another output goes to the Sum Loop A27 board where it becomes part of the tuning voltage for the First LO VTO on the A22 board. That same output is also checked by a comparator to make sure that the tune voltage is not too high or low, indicating an unlocked situation.

### 6-23. Fractional N Loop (A31, A32 and A33)

Fractional N technology gives the 3585 the additional frequency accuracy that ÷N does not give. Before going into the implementation of Fractional N in the 3585, we will briefly discuss the concept of fractional N synthesis. We will begin with our basic ÷N PLL.
See Figure 6-9, Standard Phase Lock Loop.

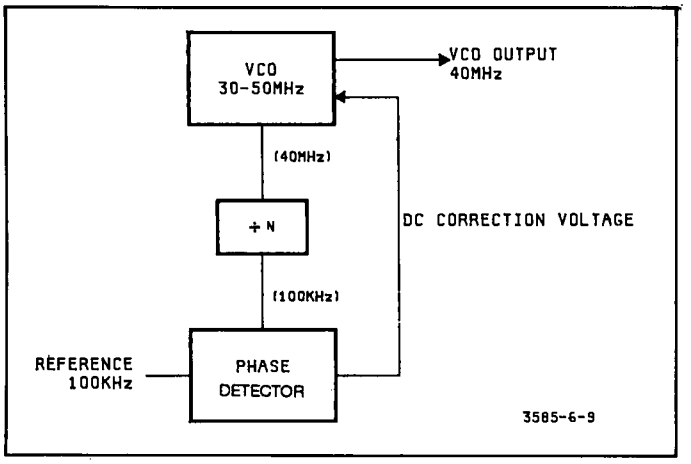


**Figure 6-9. Standard Phase Lock Loop**

The frequency of the VCO is controlled by the dc correction voltage out of the phase detector. In this example, the phase detector "sees" no difference in the phase of the inputs, thus the dc correction voltage has no effect on the VCO frequency. To change the frequency, the N need only be changed. If it were set to 500, the phase detector input would change to 80 kHz. Compared to the 100 kHz reference frequency, this shows a constantly changing phase. The dc correction voltage output of the phase detector will change, which will vary the VCO frequency in the proper direction. It will "lock in" at a frequency of 50MHz which divided by 500 leaves 100 kHz at the phase detector input.

Figure 6-10 shows a PLL with a sample and hold circuit added. The circuit operation is as follows:

1. The phase detector/comparator output is a current source which charges up the integrator's capacitor for a specific amount of time

2. The sample/hold switch transfers the integrator voltage to the sample/hold circuit.

3. This voltage is stored on the sample/hold capacitor and it is amplified and used for the dc correction voltage.

4. The bias current source is then turned on to discharge the integrator because the voltage would continue to build up.

5. The cycle then repeats itself.

Suppose we desire a frequency which requires a ÷N more than three digits. An output frequency of 40.04 MHz would require a divide by N of 400.4. This is referred to as divide by N fractional. The existing circuit would not allow the fractional part. The pulse remove command and Analog Phase Interpolator (API) control are required to accomplish the desired divide by N fractional. See Figure 6-11, Fractional N Phase Lock Loop.

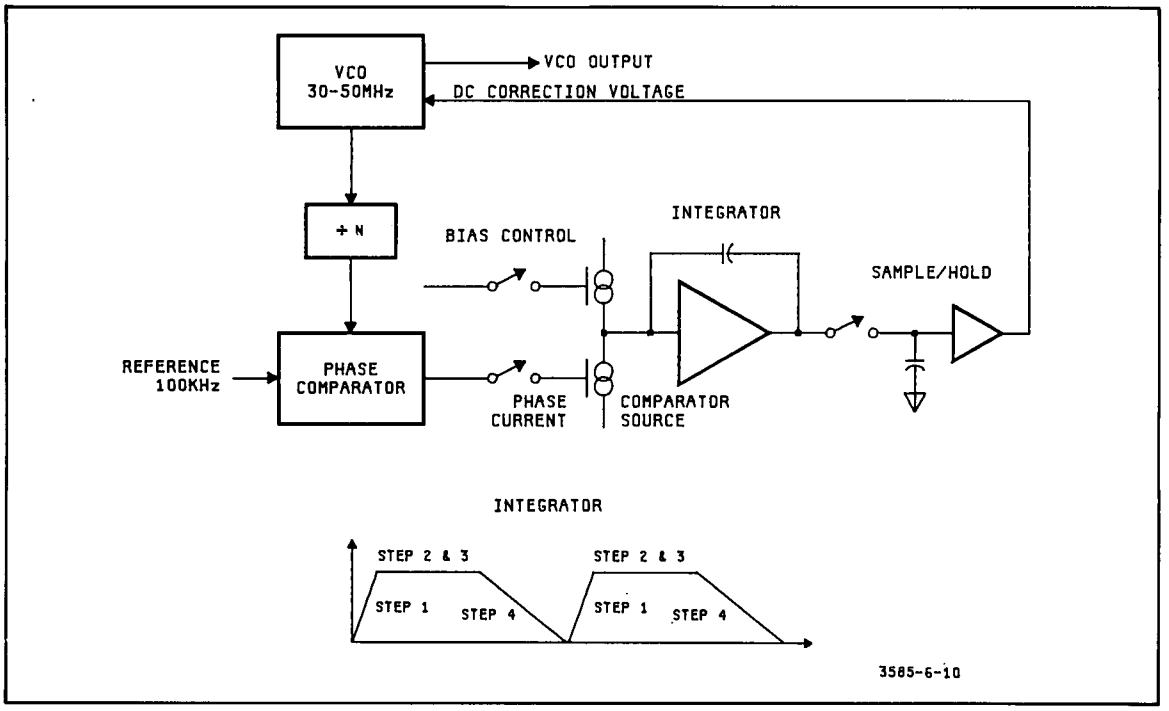


**Figure 6-10. PLL With Sample/Hold**

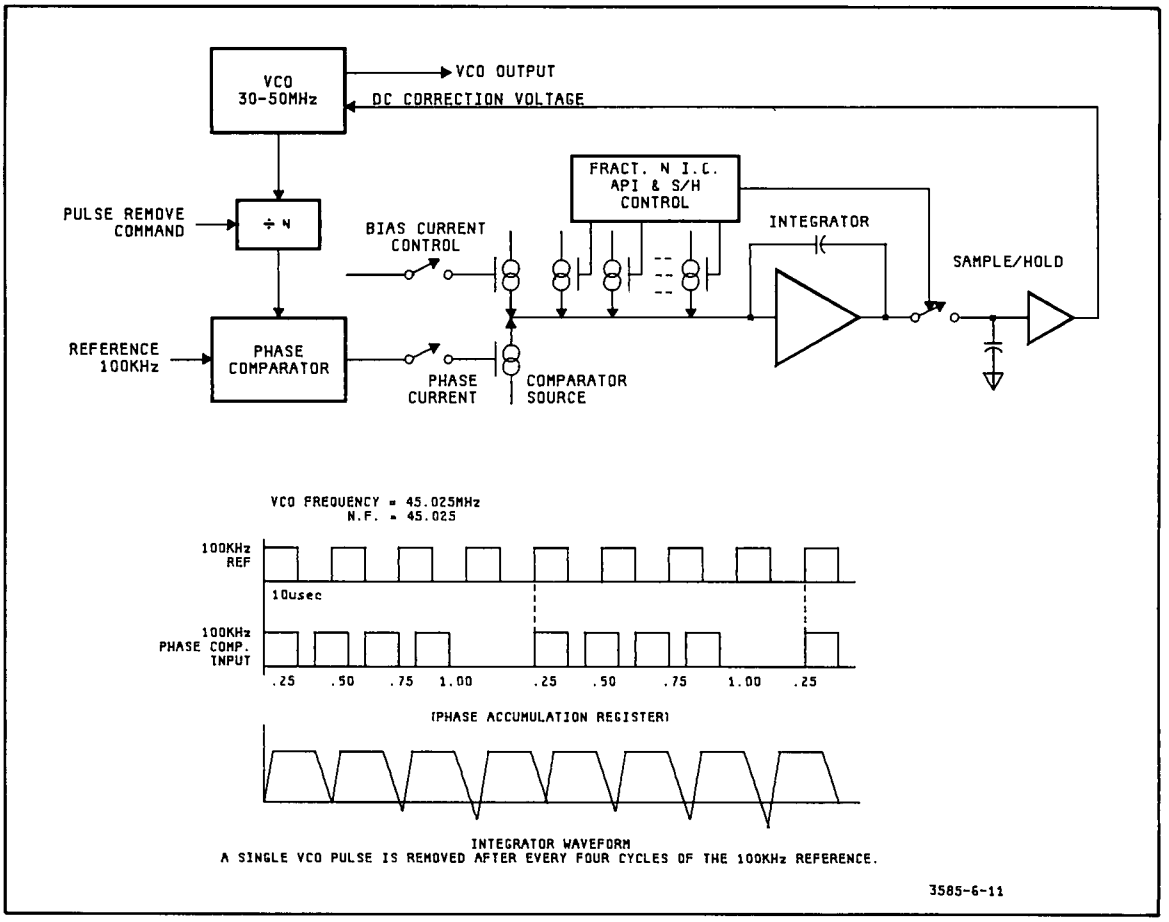


**Figure 6-11. Fractional N Phase Lock Loop**

To understand the pulse removal portion of Fractional N, the ÷N block must first be fully understood. To divide the VCO frequency by an integer number (N = 400 for example), the VCO will set to 40 MHz. An output of 100 kHz from the ÷N block is desired. When N is chosen as 400, a counter is set to count to 400. The counter's input is the VCO frequency. Its output will be a pulse which occurs once for each 400 input pulses. The frequency has then been divided by that integer.

If fractional N is desired, the counter which effectively divides the VCO frequency will have a changing value. For example, let the output frequency be 40.04 MHz. To get a phase detector input of 100 kHz, the effective N is 40.04 MHz divide by 100 kHz or 400.4. To accomplish dividing by 400.4, the counter is first set to ÷400 for 60% of the time and it will ÷401 for 40% of the time. The ÷401 is referred to as pulse removal since the counter has to receive one more VCO cycle before it outputs a pulse.

The pulse removal command is controlled by the phase accumulation register. This register contains the total fractional part which has been accumulated at any given time. An example will show how the fractional part of N is added to the register and the overflow is used to control the pulse remove command.

Example: Let the output frequency equal 40.04 MHz and the phase detector input is 100 kHz; therefore, the ÷N fractional must be 40.04 MHz divided by 100 kHz or 400.4.

Phase Accumulation Register:

| | | |
|---|---|---|
| | .0000 | initially set to zero |
| + | .4000 | |
| | .4000 | first cycle (10 usec) |
| + | .4000 | |
| | .8000 | second cycle (20 usec) |
| + | .4000 | |
| | 1.2000 | third cycle (30 usec) a pulse remove is initiated because of the carry |
| + | .4000 | digit |
| | .6000 | fourth cycle (40 usec) no pulse remove because no carry was initiated |
| + | .4000 | |
| | 1.0000 | fifth cycle - pulse remove is generated because of the carry |
| + | .4000 | |
| | .4000 | cycles repeat |

To get an overall idea of how Fractional N is implemented in the 3585 , look at the Fractional N Loop portion of Figure 6-12. Local Oscillator Block Diagram. Circuit boards will be discussed in the order appearing in the block diagram: A33, A32 and A31. (Refering to the applicable board schematic may be helpful in understanding circuit operation.)

The A33, Divide By N Counter, board contains the Fractional N Control chip through which the API's and counters are programmed. This chip and its associated circuitry also generate many clocks and control logic signals. For the most part, the remaining circuitry on the board is a programmable ÷N counter. U4 and U5 are a ÷2 (or ÷3 during pulse swallow), U12 and U13 are a ÷N where N = 1 to 5, and U14 and U15 are both programmable ÷10. Together they form a ÷N circuit where N = 250 to 600. This divided-down

pulse train becomes the Cycle Start (CS) signal that enters the Frac N chip. U6 and U7 take the input signal after it has been divided by 2 or 3 and divides it by 5 to form the Chip Clock (CC) for the Frac N chip. U2B and U3 are to ensure synchronization of the pulse train that will go to the phase detector. Since the accuracy of the entire section is based on measuring the phase difference between this pulse train and the 100 kHz reference, it is crucial that the timing of this pulse be tightly controlled. A latch clock is also generated for the API hex latch on A32.

The A32, Analog, board begins with a phase detector whose output is determined by the phase difference between the signal from A33 and a 100 kHz reference from A21. This pulsed output charges C9 of the integrator. Q32 and Q34 act as sample switches, transferring the voltage on C9 first to C13 and then to C14 and through a unity gain buffer to A31 as the dc tuning voltage. Two FET switches are used to reduce spurs due to a single switch acting as a capacitor.

The remainder of the A32 board is the bias and API circuitry. The duration of the individual API's is programmed by the Frac N chip and is latched onto the board by U1. API1 is 1/100 of the phase detect current. Each successive API is 1/10 of the preceding one. The bias and API currents are summed and form the current that discharges C9 in the integrator, readying it for the next phase detector current pulse. The rest of this board is timing and switching for the various currents and the sample/hold.

The Frac N VTO tune voltage from A32 enters A31 and is buffered (gain = 1.5) and then low pass filtered. From this point the Frac N Error voltage goes to the Sum Loop (A27). In the multiple loop mode, this voltage also tunes the 35-60 MHz VTO on the A31 board, which is then buffered and goes back to the A33 board to close the loop. The 35-60 MHz signal is also ÷ 20 to achieve the 1.75-3.00 MHz signal necessary as a reference on the A28 board. Notice that in single loop, the 100-140 MHz signal from A24 enters A31 and is divided by four to attain the 25-35 MHz used to close the loop when in single loop.

### 6-24. LO Control (A34)

This board controls the LO and, therefore, the sweep. LODA lines 0 thru 4 enter the board and are directed, via gates and flip-flops, to the trigger circuitry, the fractional N section, the Step Loop and/or the A/D.

This board contains the trigger circuitry, with a choice of external or line (60 Hz) trigger. Unlock indications from the various loops all enter this board and light LED's to indicate an unlock situation. These are also OR'ed together to signal an "LO Unlocked" on the display.

This board also contains a voltage regulator and additional circuitry for providing power supplies to other boards. Finally, a 200 usec clock is generated for signaling A/D conversions.

**Circuit Board Designator**
**To**
**Schematic Drawing Number**
**CROSS REFERENCE**

| Circuit Board Designator | Schematic Drawing Number* |
|---|---|
| A21 | B-1a |
| A22 | B-2a |
| A23 | B-3a |
| A24 | B-2b |
| A25 | B-2c |
| A26 | B-3b |
| A27 | B-2d |
| A28 | B-2e |
| A31 | B-4a |
| A32 | B-4b |
| A33 | B-4c |
| A34 | B-5 |
| A81 | B-16 |

*See Section 10 for schematic drawings.

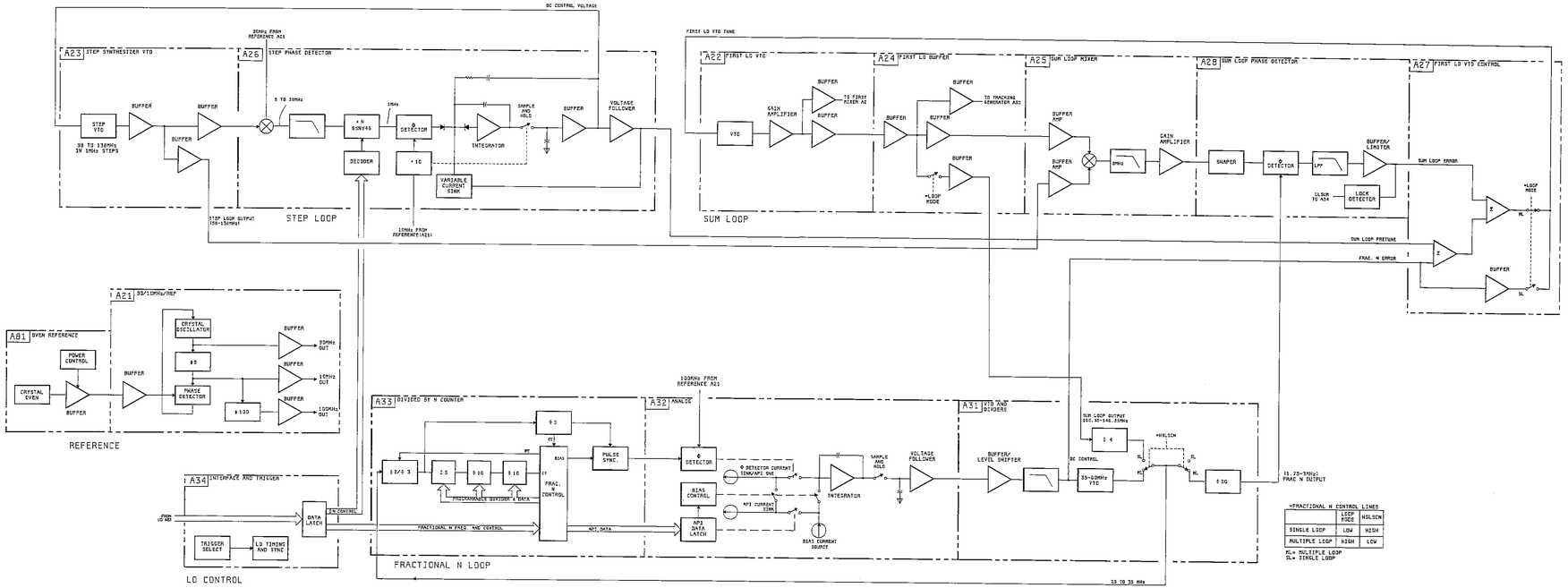


Figure 6-12. Local Oscillator Block Diagram

## 6-25. PROCESSOR DESCRIPTION (Service Group C)

The main functions of the processor section of the HP 3585 are illustrated in Figure 6-13, Processor, I/O and Keyboard Block Diagram.

The processor address bus, data bus, and control lines carry communication between the central processor and ROM, RAM, and other support circuits on the central processor assembly. The chip select lines from the address decoder control the DTACK (Data Transfer ACKnowledge) generator and select the ROM, the multi-function peripheral (MFP) circuit, the machine data bus, the option circuits, and the RAM.

The DTACK generator and bus error detector circuits provide handshaking signals to the processor from the peripheral circuits. The bus error detector starts counting at 625 kHz when / AS goes low at the start of a memory cycle. If the cycle hangs, the bus error detector pulls BERR low. The DTACK generator circuit generates DTACK for those processes not using the MFP.

RAM is accessed by the central processor and display DMA circuits through the RAM address and data buses. When the processor accesses RAM, the address decoder asserts /RAMSEL (RAM SELect) to the arbitrator circuit which asserts /PROCREF (PROCessor REFerence) when the memory cycle is permitted. This enables the RAM address and data buffers. The arbitration circuit controls RAM access with /RAMCSI (RAM Chip Select I) which is buffered to form /RAMCS (RAM Chip Select).

Prior to a display DMA of the RAM, / ADRSCS (Address Chip Select) latches the beginning address of a display buffer into the DMA counter. The display accesses RAM starting with /DMARQ (DMA request) going low to the arbitrator. If a processor RAM access is pending or active, the arbitrator gives the processor priority, otherwise the arbitrator sets /DMAREF (DMAREFerence) low preventing a processor RAM reference, and enables the DMA counter to output the RAM address it is holding. /CLKDD (CLocK Display Data) enables the display data latch to read data read from RAM and increments the DMA counter to the next address. /DMARD (DMA ReaDy) is set low to tell the display that display data is ready and remains low until the display raises /DMARQ.

The power fail sense circuit and reset circuit monitor the +5V supply. The power fail sense circuit connects the power supply to RAM when power reaches the threshold voltage. /RESET trips at a slightly higher threshold voltage than the +5V power supply to insure that /RESET is asserted during the power-up cycle. When power goes down, the events are reversed. First, /RESET is asserted. As the voltage continues to fall, +5V supply is cut off allowing the RAM to maintain its contents from the nonvolatile RAM power supply.

All processor interrupts are managed by the MFP. When the MFP senses a need for an interrupt, the MFP drops IRQ low. When an interrupt occurs the processor forces /IAC low to acknowledge the interrupt. In addition to signalling the MFP, /IAC disables the address decoder and tells the DTACK generator not to assert DTACK.

In addition to managing interrupts, the MFP contains a general purpose parallel I/O port, four timers, and a serial interface. The parallel I/O port synchronizes the display with the processor and monitors the interrupt and service requests for the display,

HP-IB, ADC, and keyboard. There are four timer-counters in the MFP. Timer A drives the beeper. Timer B is periodic timer which interrupts about 60 times per second. It is used for all software timing purposes, such as how long the beeper beeps and frequency of calibration. Timer C controls the display refresh rate. Timer D supplies the clock for the unused internal serial interface.

The clock circuits create the timing pulses required by the Central Processor, I/O Board, and Digital Display Driver assemblies. A phase-locked-loop circuit in this block runs at 20 MHz and locks to the 10 MHz reference on J1. The other circuits in this block divide the 20 MHz signal to create the reference frequency for the phase-locked-loop circuit and other clock frequencies needed.

The SA (Signature Analysis) test circuit forces the processor into the kernel SA test when TP5 is grounded. In this test the address decoder U6 is disabled, data bus bits DB0, DB8, and DB15 are held low, and the remaining data bus bits are held high. This results in the processor exercising all of its address bits.

The A83 I/O board contains the frequency counter and the buses, decoders, latches, and control circuits for directing data to various I/O sections. The most complex circuit represented in the I/O board block diagram is the frequency counter. The state machine, duration counter, and cycle counter on the I/O Board form the major blocks of the counter. The counter determines the frequency of the 350 kHz IF while the LO is held at a fixed frequency, from which the frequency at the input can be calculated. The central processor starts the cycle by loading a value into the duration counter and zeroing the cycle counter. The duration counter determines the period of the count while the cycle counter counts the 10 MHz frequency cycles occurring during the period. The state machine controls the timing of these two counter. Initially, the state machine starts both counters synchronously. During the count, the state machine increments the duration counter at half the IF frequency, and increments the cycle counter at 10

MHz based on the signals 350kHz and CNTCLK respectively. When the duration counter reaches -1, the state machine stops both counters synchronously. The central processor concludes the cycle by reading the value in the cycle counter.

Finally, A87 is the keyboard. An 8 by 10 matrix system is used to monitor the front panel keys. The rest of this board is LED's and their drive circuits and the RPG (Rotary Pulse Generator) circuits.

**Circuit Board Designator**
**To**
**Schematic Drawing Number**
**CROSS REFERENCE**

| Circuit Board Designator | Schematic Drawing Number* |
|---|---|
| A41 | C-1 |
| A42 | C-2 |
| A43 | C-3 |
| A45 | C-4,C-5 |
| A47 | C-6 |

*See Section 10 for schematic drawings.

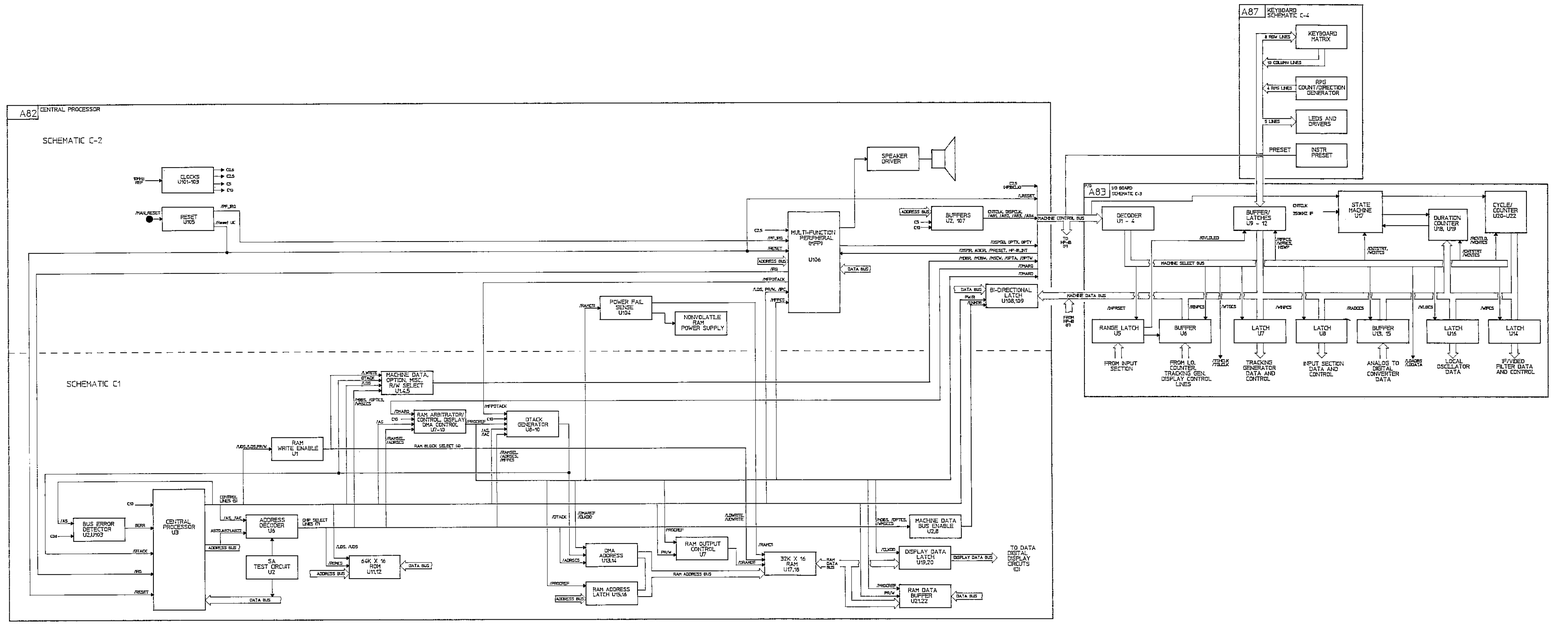


Figure 6-13. Processor, I/O and Keyboard Block Diagram

## 6-26. DISPLAY DESCRIPTION (Service Group D)

The Display Section Block Diagram depicts the operation for the display section. As each board of the display is discussed, refer to Figure 6-14 Display Block Diagram in this section and the schematic diagrams in Service Group D.

The display controller on the A85 Digital Display Driver governs the operation of the A85 display circuits. Prior to a display cycle, the central processor resets the display controller by setting DSPGO low. When the display controller is reset, /DSPIR is set high. The central processor initiates a display cycle and starts the display controller by asserting DSPGO. When the display controller completes a display cycle, it signals the central processor by setting /DSPIR low. The central processor responds by resetting the display controller to await the signal to start the next cycle.

The Digital Display Drive obtains display data from the processor board through the DMA data latch. The display controller interprets the operation code transmitted as part of the display data to coordinated and control the Digital Display Driver operation.

Alphanumeric characters received as display data are drawn by the alphanumeric character generator. The location of the alphanumeric character is latched by the 8-bit alpha x-axis latch and the 10-bit y-axis latch.

For graphics information, the y-axis latch holds y-axis data and determines the vertical length of the line. Based on the line length, the y-axis latch supplies the appropriate control ligic to the programmable amplifier of the line drawer circuit on the Analog Display Driver. While the y-axis information is derived from digital data, the x ramp control governs a ramp voltage generator on the Analog Display Driver to create the x-axis graphics position.

The A86 Analog Display Driver takes the digital data from the Digital Display Driver and converts it into analog signals used by the display circuits. Consider the graphics first. X-axis graphics is simply a voltage ramp (XGR) to sweep the display from left to right. Two signals (/RAMP_EN (RAMP ENable) and HSWP) control the ramp generator. /RAMP_EN signals the ramp current source to charge the sweep integrator creating a voltage ramp. When low, HSWP signals the retrace from right to left to prepare for the next ramp. This signal causes the sweep integrator capacitor to discharge. The ramp remains on for 3.4 *micro* sec for each y-axis sergment. For lines that take longer to draw, the ramp turns on for 3.4 *micro* sec then off for the remaining time.

The 10-bit y-axis DAC receives the y-axis data and converts the incoming data to an analog current used by the line drawer circuit. The line drawer circuits convert the current into a voltage that is amplified by a programmable amplifier. The sample enable pulse from the Digital Display Driver controls a sample and hold circuit to periodically capture the output of the programmable amplifier. The captured output is transferred to an integrator that creates YGR that controls the vertical line drawn on the display.

The programmable amplifier in the line drawer circuit is used so that longer lines appearing on the display appear with the same intensity as shorter lines. To explain further, if all lengths of lines were drawn in the same amount of time, the long lines

would appear dimmer than the short ones; therefore, the programmable amplifier in conjunction with the variable drawing time create lines of the correct length and comparable intensity.

Now for the alphanumerics. The 10-bit alpha y DAC and 8-bit alpha x-spacing DAC receive information that determines the y-axis point about which the character will be formed. The 3-bit alpha x DAC and alpha y DAC receive the dot matrix information

for creating the character. The position information is summed with the character information to create the signals XALPHA and YALPHA.

All of the display information reaches the analog switch where it is selected for display at the correct time. This information is buffered and sent on the XYZ board and these signals also appear at the rear panel for an external display.

The A67 XYZ board is basically the amplifiers necessary to raise the signals from the Analog Display Driver to the levels needed by the CRT deflection plates. Since the line intensity is controlled on the Analog Display Driver, the z-axis signal is an on/off signal. That is, blanking occurs during retraces and between dots of the matrix when the character is being drawn. The z-axis signal enters the XYZ board, is amplified, and then is sent to the A65 High Voltage board where it causes blanking and unblanking.

The high voltage oscillator consists of the A65, A66 and part of the A67 boards. The HV oscillator stimulates the primary of the HV transformer with a 20 to 30 kHz signal. The highly stepped up signal from the secondary of the HV transformer is rectified and filtered by the Pi network filter thus providing a -4000 Vdc cathode voltage. This voltage is sampled by the feedback network to regulate the dc level of the base winding of the HV transformer thus maintaining a cathode voltage of -4000 Vdc.

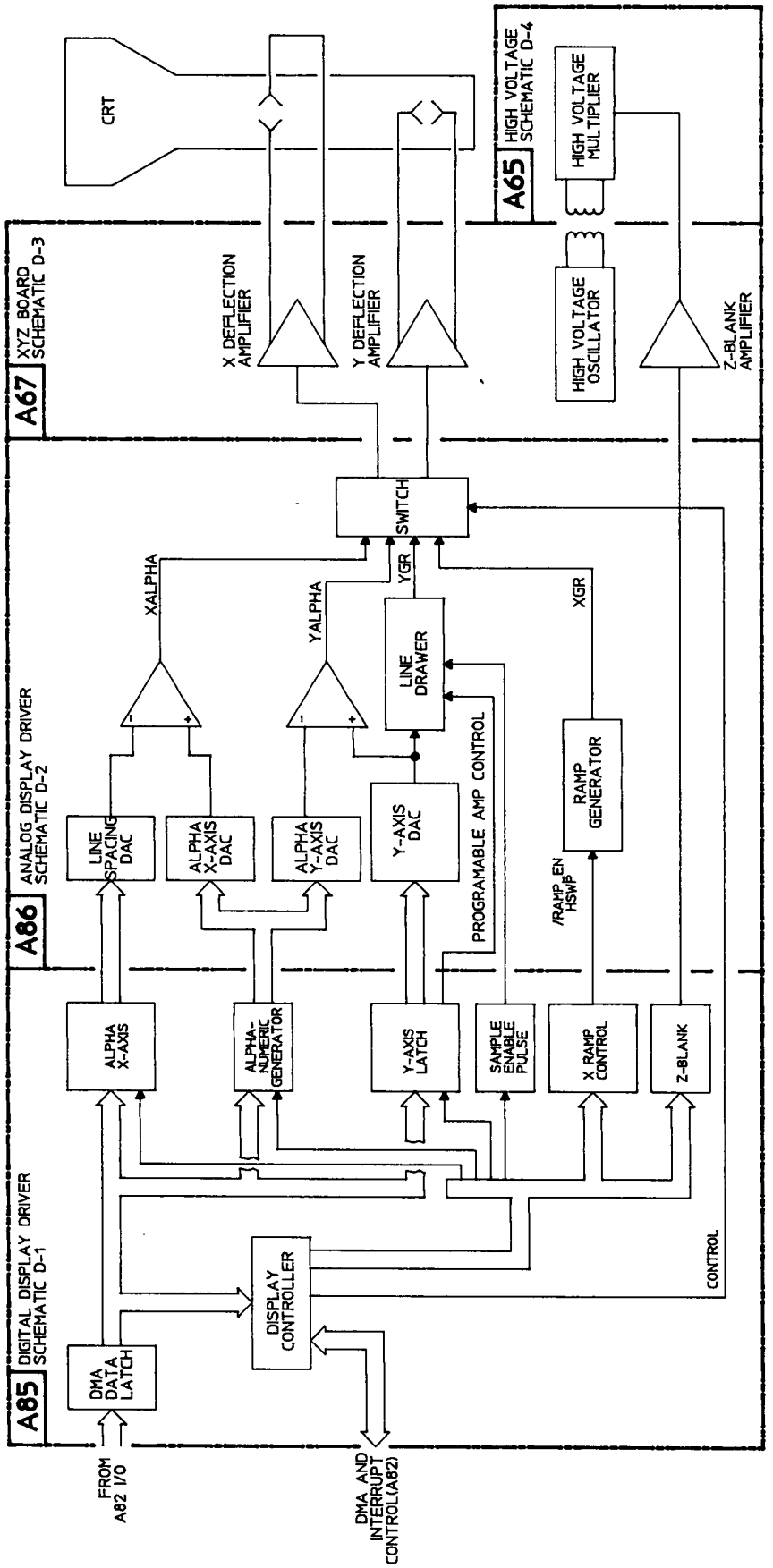


Figure 6-14. Display Block Diagram

## 6-27. TRACKING GENERATOR DESCRIPTION (Service Group E)

The Tracking Generator simply produces a sine wave at the frequency at which the 3585 is tuned. In other words, the Tracking Generator produces frequencies from 0 to 40 MHz. The obvious way to do this is to simply take the LO signal of 100.35 to 140.35 MHz and subtract (mix) a 100.35 MHz from it. This is in fact what is done; however, the circuit is slightly more complex than what we have implied. Because the IF section of the 3585 drifts very slightly with time, the calibration system takes this into account by adjusting the LO slightly so that it matches up with the IF section. If the LO was then used by the Tracking Generator, the results would be erroneous. What happens is that during the calibration cycle, the Tracking Generator is offset slightly to match up with the IF section and the LO.

The A51 board begins with two latches and two DAC's through which the 10.35 MHz VCXO reference can be controlled during the calibration cycle. This is done so that the Tracking Generator will truly follow the 3585's frequency. The DAC is separated into two parts, a coarse tune and a fine tune. During the calibration cycle, the bits of the two DACs are set one at a time until the Tracking Generator is matched up with the IF peak. A ÷100 circuit causes the actual fine tune signal path.

The DAC output voltages are summed to control the frequency of oscillation of the 10.35 MHz VCXO. A 90 MHz signal from A21 and a 100.35 MHz signal from A52 are mixed to produce a 10.35 MHz signal. The two 10.35 MHz signals are then phase detected, their phase difference causing a pulse which is integrated to form the VCO Control Voltage Out signal.

The VCO control voltage enters the A52 board and then the A53 board where it becomes the tuning voltage for the 100.35 MHz VTO. An amplifier stage provides amplitude control for the Tracking Generator output. The LO signal enters the A52 board and is mixed with the 100.35 MHz signal from the A53 to yield a signal from 0 to 40 MHz. This signal is low pass filtered and then given 20 dB of gain before being output to the front panel.

During the calibration cycle, both the Tracking Generator signal and a 10 MHz signal are needed at different times. The A52 board, therefore, contains an active switch network which allows one or the other through when needed. An output amplifier with a gain of about three is included as the final stage. Note that when the (L)CAL goes high, the output amplifier is turned off allowing neither of the signals throught to the input section (A1).

**Circuit Board Designator**
**To**
**Schematic Drawing Number**
**CROSS REFERENCE**

| Circuit Board Designator | Schematic Drawing Number* |
|---|---|
| A51 | E-1 |
| A52 | E-2 |
| A53 | E-2 |

* See Section 10 for schematic drawings.

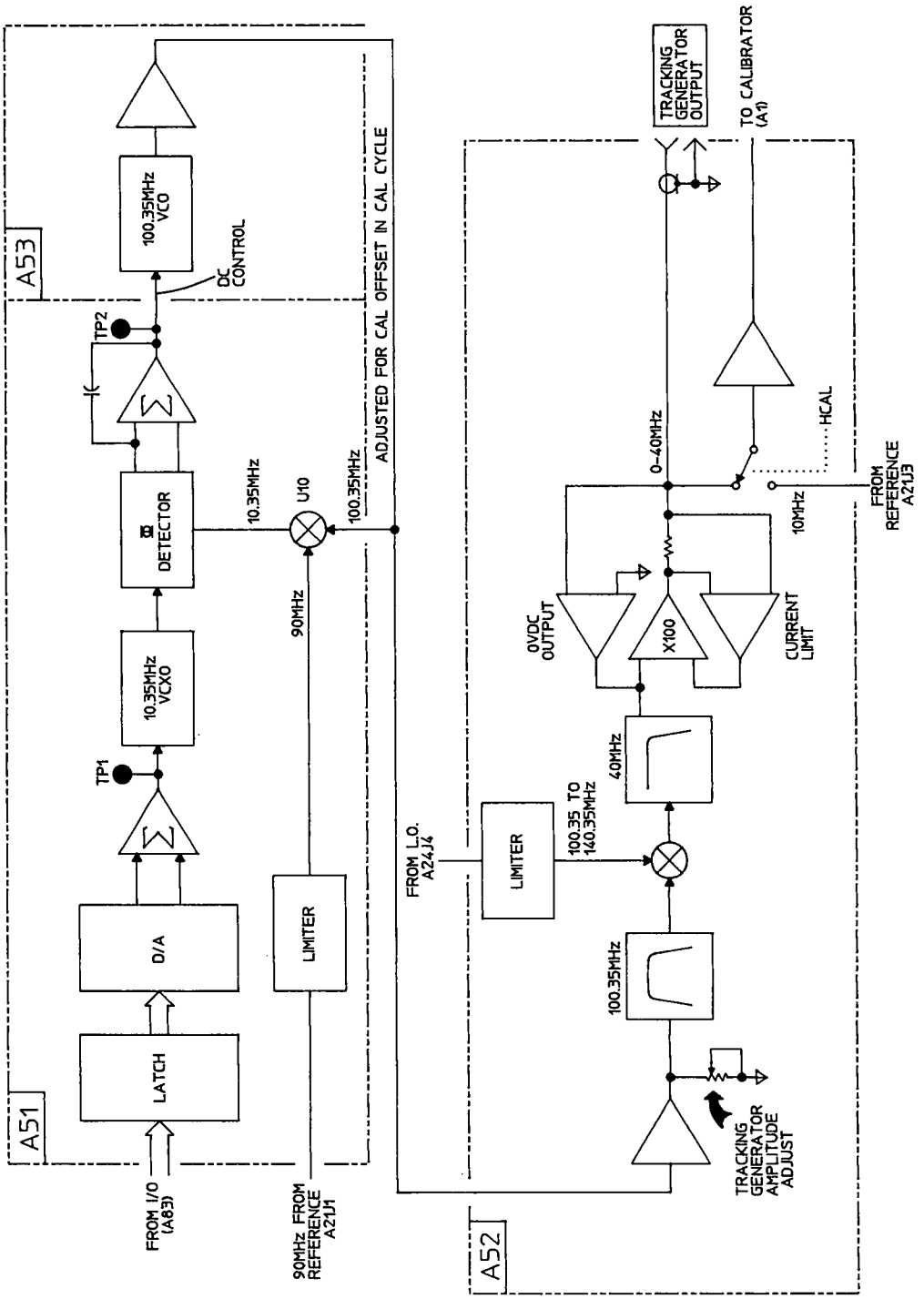


**Figure 6-15. Tracking Generator Block Diagram**

## 6-28. HP-IB Description (Service Group F)

The HP-IB interface provides an isolated link between the central processor and the HP-IB connector. Bus protocol is handled by dedicated HP-IB control integrated circuits which communicate with the central processor by a serial data link through optical isolators and shift registers. Operation of these circuits is best explained with detailed examples for the read and write operations and Figure 6-16.

To read HP-IB data, the central processor writes to the addressable latch to set SHIFT1 high. The HP-IB controller register number is then loaded into shift register U105 bits 5-7 and bit 4 is set to zero to specify a read operation. /SHIFTCS pulses three times to shift the data through the optical isolator into the receiving register. SHIFT1 is brought low, and /SHIFTCS pulses once more. This, along with former bit 4 holding W/R low in the control logic, reads the HP-IB controller and parallel loads the result into the shift register U115. The read cycle concludes by raising SHIFT1 high, and pulsing /SHIFTCS 8 more times to shift the answer into shift register U105, where it is read by the processor.

A similar sequence writes to the HP-IB controller. First, SHIFT1 is held high and data is loaded into shift register U105. /SHIFTCS then pulses 8 times to move the data through the optical isolator into shift registers U114 and U115. The HP-IB controller register number is loaded into shift register U105 bits 5-7, along with a one in bit 4 to specify a write operation. The signal /SHIFTCS then pulses 3 more times shifting all 11 bits where they belong. The cycle concludes by dropping SHIFT1 low, and pulsing /SHIFTCS once more. This, along with W/R in the control logic being held high by the former bit 4, transfers the parallel output of the shift register U115 to the HP-IB controller.

Three more signals cross through the optical isolators: /RESET, HPIBCLK, AND /HPIB_INT. /RESET is the reset signal to the HP-IB interface circuits. HPIBCLK (HP-IB CLocK) is a 2.5 MHz clock from the phase-locked loop/frequency divider circuits on the Central Processor board. /HPIB_INT (HP-IB INTerrupt signals the central processor when the HP-IB chip detects an event of interest. Although the name implies an interrupt, this signal is actually polled by the processor.

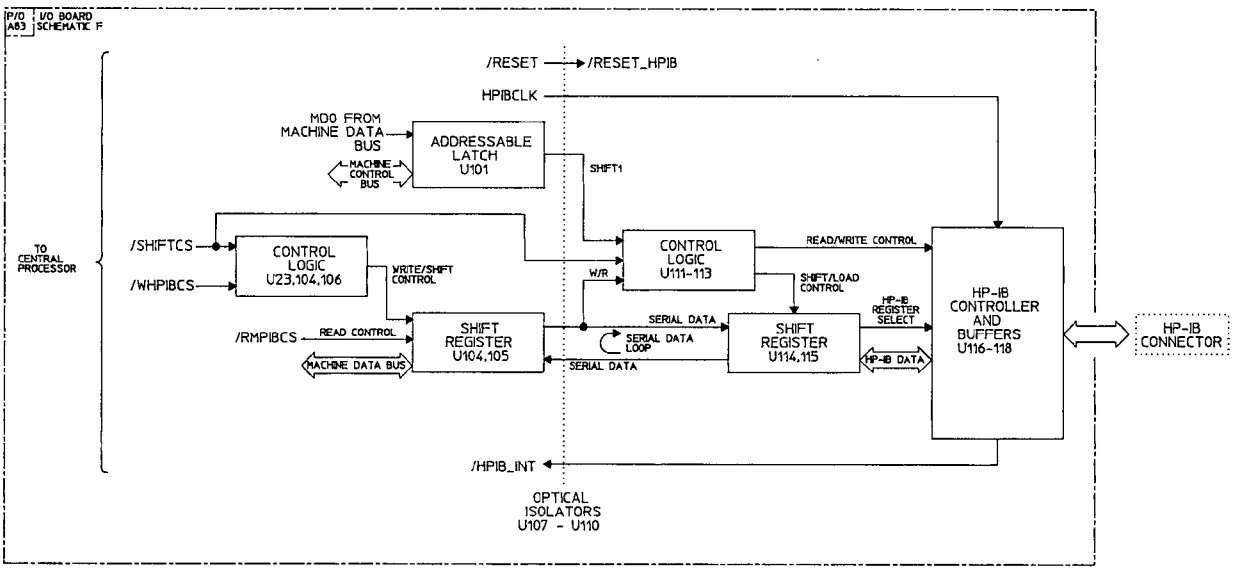


**Figure 6-16. HP-IB Block Diagram**

## 6-29. POWER SUPPLY DESCRIPTION (Service Group G)

A70 is the motherboard with some rectification circuitry mounted on it. A75 is the Power Supply Control board. It provides a 150 V supply, 5V and 24V supplies for use as raw supplies and 18V reference for use on other boards. It provides the 60 Hz trigger and finally, it provides the 20 MHz clock used on the switching regulators.

A76 is the Power Distribution board which routes the various supplies to where they are needed. Also on this board are 5V, -15V and 15V regulators.

The A71-74 are Switching Power supplies and operate the same. The switching power supply provides a very efficient means for regulating the voltage associated with high current demand. The principal component involved is the switching regulator which, when provided with the proper drive signal, switches between two states. When the switching regulator is turned on, the resistance between the input and output is very low. This low resistance dissipates very little power, even with high current flow. When the switching regulator is turned off, the resistance between the input and output is very high. This results in complete current cutoff and no power is dissipated by the device. With this in mind, it can be easily realized that any prolonged delay in switching between the two states will result in high power dissipation and failure of the device. Therefore, the switching drive current and voltages must be of the proper magnitude to assure complete state change of the switching regulator. The drive signals to the switching regulator are developed from a 20 kHz clock signal modified by the current and voltage regulator sense circuits.

The output from the switching regulator consist of pulses of high voltage and current. These pulses are filtered by a low pass network formed by a series inductor and a parallel capacitor. The voltage output is monitored by the voltage sense circuit which compares the monitored voltage to a known reference. If voltage output is low, the drive pulse remains on for a greater period of time. The current output is monitored across a low resistance series resistor located between the inductor and capacitor. The voltage drop across the resistor signals the current sense detector which turns off the switching hybrid. If the current demand is too great, such as in the case of a short circuit, the current detector will signal the current sence latch causing a yellow indicator (current limit LED) to light and the output current to fold back.

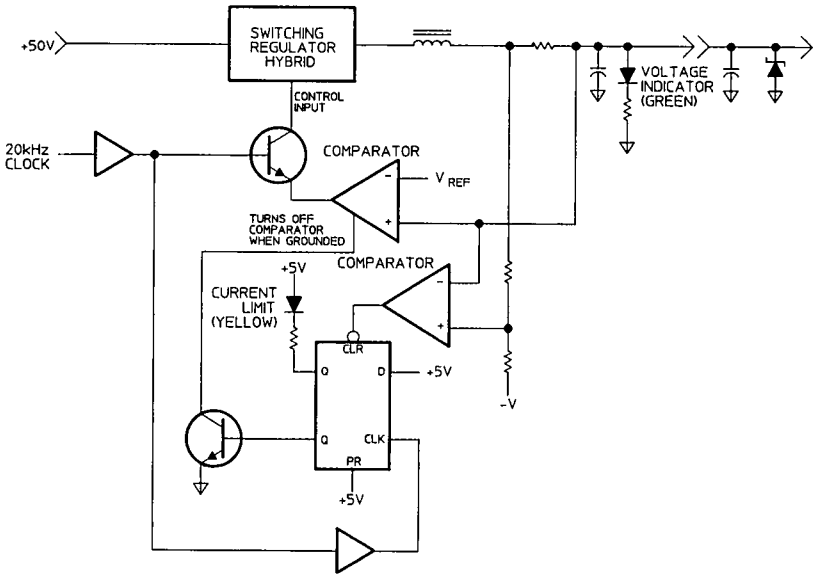


Figure 6-17. Switching Power Supply Block Diagram

**Circuit Board Designator**
**To**
**Schematic Drawing Number**
**CROSS REFERENCE**

| Circuit Board Designator | Schematic Drawing Number* |
|---|---|
| A70 | -1a,-2a,-2b, -2c,-2d |
| A71 | -2a |
| A72 | -2b |
| A73 | -2c |
| A74 | -2d |
| A75 | -1a |
| A76 | -1b |
| A89 | -1b |

* See Section 10 form schematic drawings

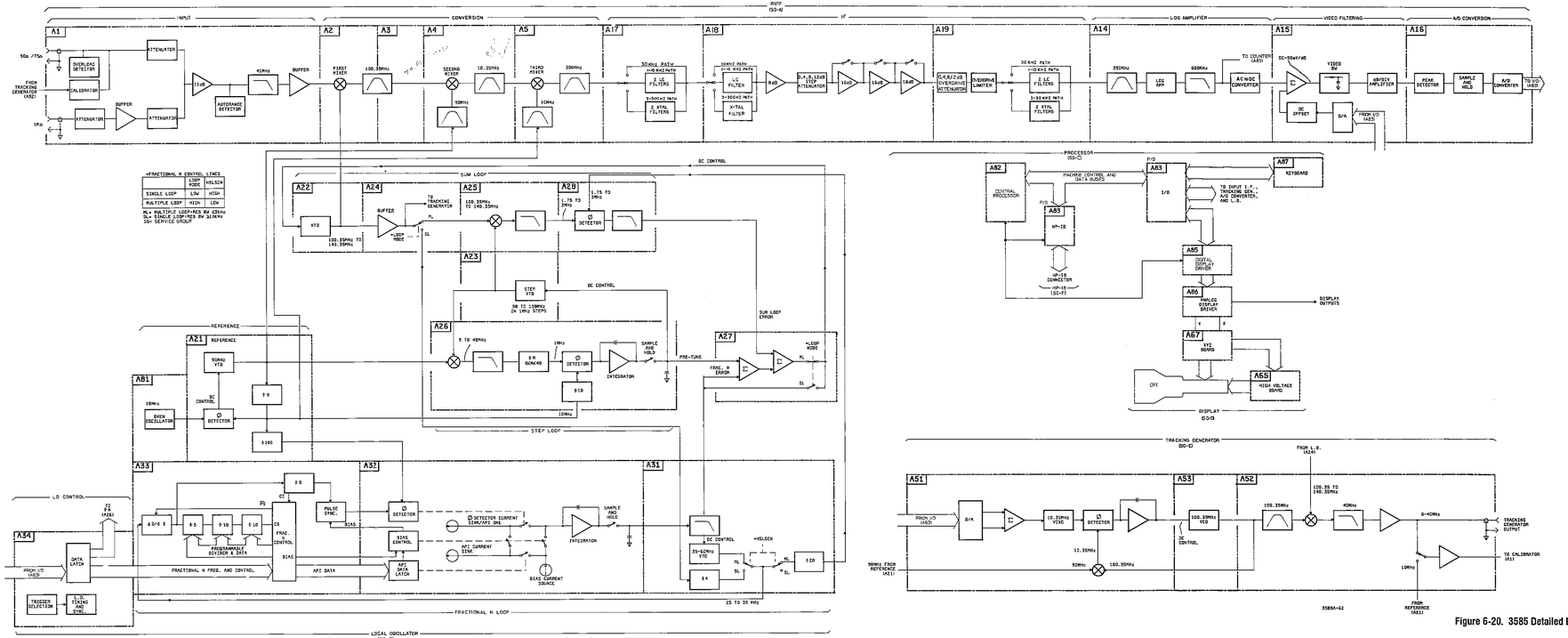


**Figure 6-20. 3585 Detailed Block Diagram**

# SECTION VII
# BACKDATING

# SECTION VII
# MANUAL BACKDATING

## 7.1 INTRODUCTION

This revision of the manual applies directly to instruments in the serial number range indicated on the title page. Earlier versions of this instrument (serial numbers lower than shown on the title page) differ slightly in design and in cases appearance. To adapt this manual to your instrument serial number. Be sure to observe both serial number and assemblies revisions in your instrument before making changes.

## 7.2. MANUAL CHANGE SHEETS

As HP continues to improve the performance of the product, corrections and modifications to the manual may be required. These changes are documented by a yellow "MANUAL CHANGES" supplement. In order to keep the manual up to date, one should periodically request the most recent supplement which is available from the nearest HP Sales and Service Office. Any changes shown on the supplement sheet which apply to the instrument (identified by serial number), should be implemented into the manual.

# SECTION VIII
# FAULT ISOLATION

# SECTION VIII
# FAULT ISOLATION

## 8-1. INTRODUCTION

The Fault Isolation information found in this section is designed to assist the experienced HP 3585 service technician in identifying which functional area (Service Group) has failed within the HP 3585 under test. New technicians or technicians with little or no experience on the HP 3585 may find the trouble shooting procedures given in Section II more applicable to their needs. Experienced technicians may also find Section II very helpful in isoluating faulty components within a specific functional area of the instrument.

As always, it is recommended that power supply operation be verified before spending excessive time troubleshooting other parts of the instrument. If front panel symptoms point to some specific functional area, use your experience and these Fault Isolation procedures in whatever way you feel best. (See Figure 8-4. Fault Isolation Block Diagram.)

## 8-2. TEST EQUIPMENT

These checks and procedures are designed to be made without the use of specialized test equipment. A 100 MHz oscilloscope with a 10:1 probe was used for all measurements; however, dc voltages can be measured for specified tolerances by using a digital voltmeter. Where input signals are required, a frequency synthesizer capable of generating a 150 kHz, 0 dBm signal and a 10 MHz, −25 dBm signal is necessary. An HP 3325 was used in developing these procedures.

## 8-3. TROUBLESHOOTING HINTS

- intermittant cables can appear to be true hardware failures
- noise or spikes on the dc power supplies can cause the instrument to fail
- interpret front panel symptoms before beginning any extensive troubleshooting
- measurements made in the Fault Isolation information section are approximate values unless specified otherwise. Some tests are as simple as GO/NO GO
- it is possible that the A2 circuit board can load the A1 circuit board resulting in an apparent A1 Failure

**Table 8-1. Index to Fault Isolation Information**

| Functional Area Under Test | Paragraph |
|---|---|
| Input Section (SG A-1) | 8-4 |
| Conversion Section (SG A-2) | 8-8 |
| Third IF (SG A-3) | 8-9 |
| Log Amplifier (SG A-4) | 8-10 |
| Video Filter (SG A-5) | 8-11 |
| Analog to Digital Converter (SG A-6) | 8-12 |
| Reference Oscillator (SG B-1) | 8-13 |
| Local Oscillator (SG B-2, B-3, B-4, B-5) | 8-18 |
| Switching Power Supplies (SG G-1, G-2) | 8-19 |
| Tracking Generator (SG E) | 8-22 |
| Fault Isolation Block Diagram | Figure 8-4 |

## 8-4. Input Section (SG A-1) A

## 8-5. Stage Gain Test

1. Input a 150 kHz, −10 dBm signal at the Terminated Input.

2. Set the 3585 as follows:

   INSTRUMENT PRESET
   RANGE.....−25 dBm
   MANUAL.....150 kHz

3. Signal at A1TP3 should read approximately .25 Vp-p ±.03V at 150 kHz (sinewave).

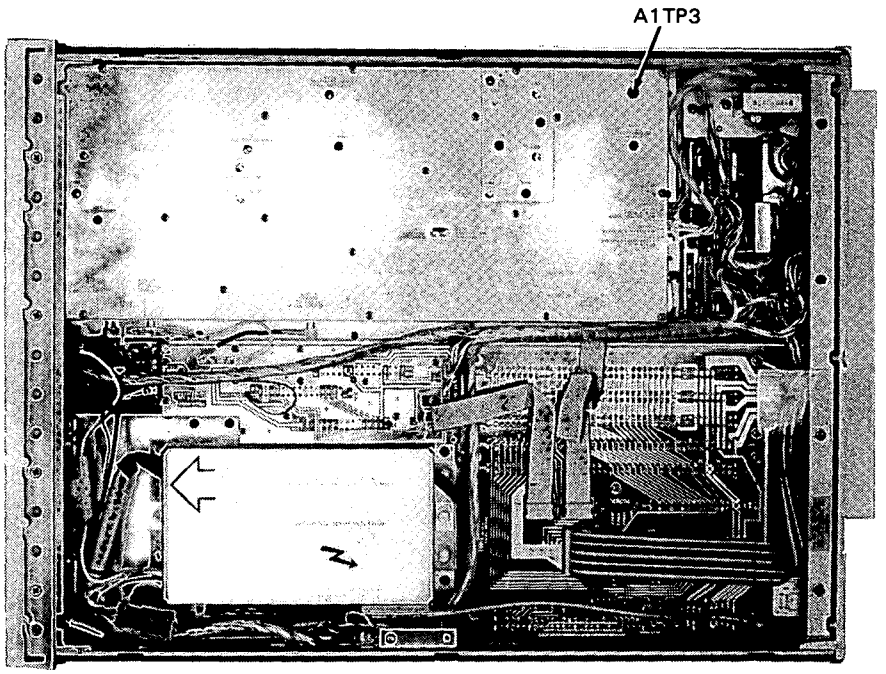


**Figure 8-1. Input Section, A1TP3**

## 8-6. Attenuator Test (50/75 ohm Termination)

1. Set the 3585 as follows:

INSTRUMENT PRESET
SHIFT ..... 605
INSTRUMENT PRESET

2. Set instrument RANGE to that shown in Table 8-2 and verify the marker reading.

**Table 8-2. 50Ω/75Ω Attenuator Test**

| Range | Marker Reading | Attenuator Under Test |
|---|---|---|
| −25 dBm | −25 dBm ± 1 dBm | zero attenuation |
| −20 dBm | −25 dBm ± 1 dBm | 5 dB pad |
| −15 dBm | −25 dBm ± 1 dBm | 10 dB pad |
| − 5 dBm | −25 dBm ± 1 dBm | 1st high power 20 dB pad |
| +15 dBm | −25 dBm ± 1 dBm | 2nd 20 dB pad |

**NOTE**

*Failure in the −25dBm range (zero attenuation) may be caused by a relay failing in the closed position.*

## 8-7. Attenuator Test (1 Meg ohm Termination)

1. Input a 10 MHz, −25 dBm signal at the 1 Megohm Input. (Use feed-thru termination to match source impedance.)

2. Set the 3585 as follows:

INSTRUMENT PRESET
INPUT IMPEDANCE.....1 M OHM
MANUAL.....10 MHz

3. Set instrument RANGE to that shown in Table 8-3 and verify the marker reading.

**Table 8-3. 1 MΩ Attenuator Test**

| Range | Marker Reading | Attenuator Under Test |
|---|---|---|
| −25 dBm | −25 dBm ± 1 dBm | zero attenuation |
| −20 dBm | −25 dBm ± 1 dBm | 5 dB pad post pad |
| −15 dBm | −25 dBm ± 1 dBm | 10 dB pad post pad |
| − 5 dBm | −25 dBm ± 1 dBm | 20 dB high power 1 Meg ohm pad |
| +15 dBm | −25 dBm ± 1 dBm | 20 dB 1 Megohm pad |

**NOTE**

*Failure in the −25dBm range (zero attenuation) may be caused by a relay failing in the closed position.*

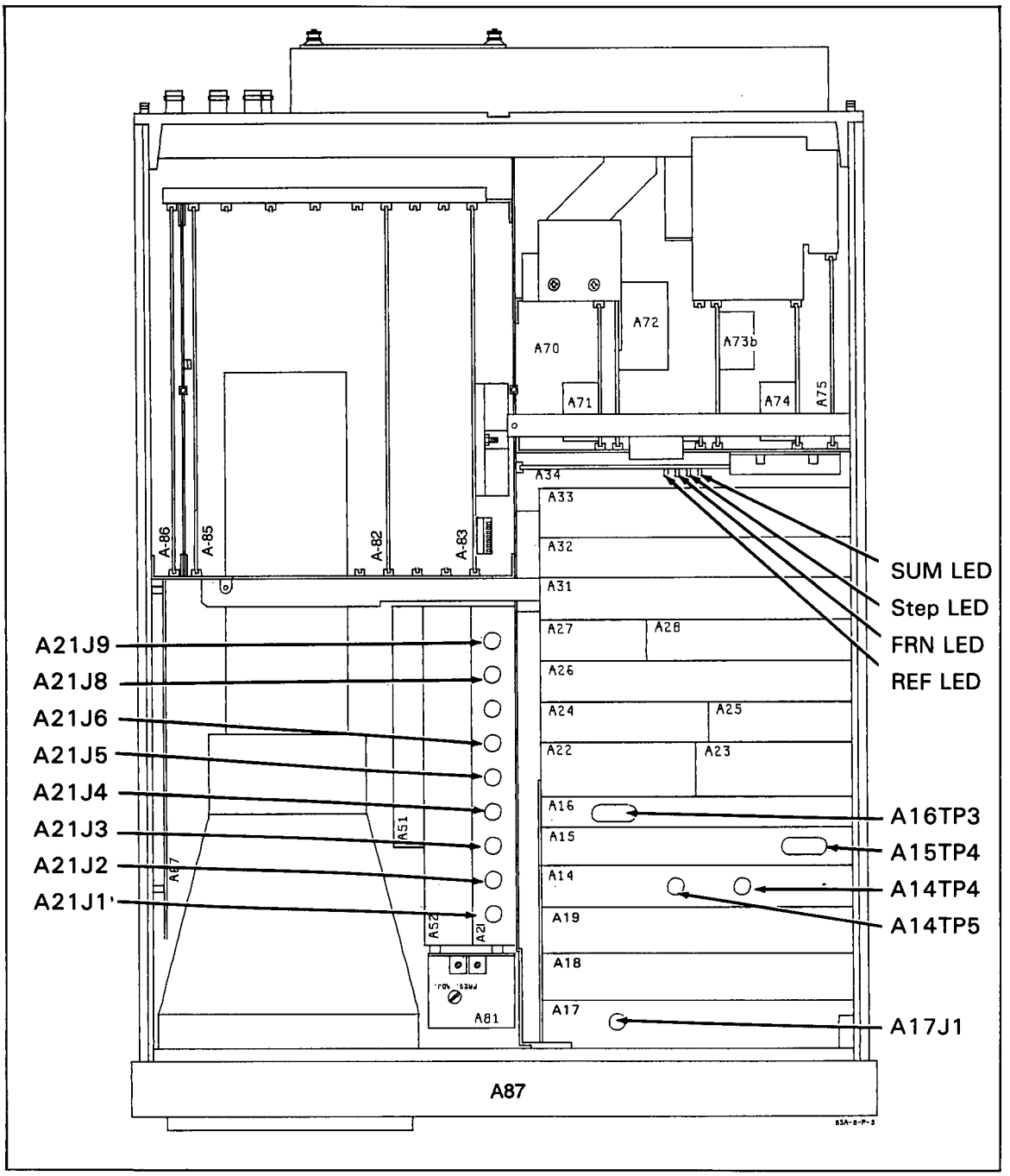


**Figure 8-2. Signal Test Point Locations**

## 8-8. Conversion Section (SG A-2) B

1. Input a 10 MHz, −25 dBm signal at the Terminated Input.

2. Set the 3585 as follows:

INSTRUMENT PRESET
MANUAL.....10 MHz
RANGE.....−25 dBm

3. Disconnect the green cable (W-23) going to A17J1.

**NOTE**

*Ignore calibration error messages.*

4. Signal measured at disconnected end of the W-23 cable should be between .45V p-p to 1v p-p. Typical is .5V p-p at 350 kHz. (sinewave)

5. Reconnect the green W-23 cable to A17J1.

**NOTE**

*If measured signal is out of range, check the Input Section and the Local Oscillator signals to the Conversion Section.*

## 8-9. Third IF (SG A-3) C

1. Input a 10 MHz, −25 dBm signal at the Terminated Input.

2. Set the 3585 as follows:

INSTRUMENT PRESET
MANUAL.....10 MHz
RANGE.....−25 dBm
RES BW.....30 kHz
COUNTER.....on
MARKER to CENTER FREQUENCY

3. Signal at A14TP5 should read between .56V p-p and .85V p-p at 350 kHz (sinewave).

**NOTE**

*Each time the RES BW is changed, wait for the instrument to autocalibrate.*

4. Step the instrument through all RES BW. Signal at A14TP5 should remain constant.

## 8-10. Log Amplifier (SG A-4) D

1. Input a 10 MHz, −25 dBm signal at the Terminated Input.

2. Set the 3585 as follows:

INSTRUMENT PRESET
MANUAL.....10 MHz
RANGE.....−25 dBm
RES BW.....30 kHz

3. Voltage at A14TP4 should be −5.7V ± 0.3V.

## 8-11. Video Filter (SG A-5) E

1. Input a 10 MHz, −25 dBm signal at the Terminated Input.

2. Set the 3585 as follows:

INSTRUMENT PRESET
MANUAL.....10 MHz
RANGE.....−25 dBM
RES BW.....30 kHz

3. Voltage at A15TP4 should be 5.0V ± 0.2V.

## 8-12. Analog to Digital Converter (SG A-6) F

1. Input a 10 MHz, −25 dBm signal at the Terminated Input.

2. Set the 3585 as follows:

INSTRUMENT PRESET
MANUAL.....10 MHz
RANGE.....−25 dBm
RES BW.....30 kHz

3. Voltage at A16TP3 should be 9.8V ± 0.1V.

## 8-13. Reference Oscillator (SG B-1) G

## 8-14. Go/No Go Test

1. Turn the 3585 power on.

2. Check that the REFerence LED on the A34 board is not illuminated.

**NOTE**

*If the REF LED is illuminated, the 90 MHz VCXO on the A21 board is not locked.*

*If the REF LED is not illuminated, the 90 MHz VCXO is operating. This does not however mean that all clock and oscillator signals generated on the A21 board are operating properly.*

**NOTE**

*The 10 MHz and 90 MHz signals going to the Conversion Section are not tested as part of these procedures. To test these signals, see schematic B-1 for test points.*

## 8-15. 100 kHz Signal Test

1. Turn the 3585 power on.
2. Disconnect cable from A21J8.
3. Check A21J8 for the signal shown.

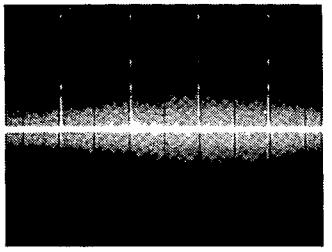

A21J8

5 usec/DIV
.1 volts/DIV

10:1 probe (ac coupled)

4. Reconnect cable to A21J8.
5. Disconnect cable from A21J9.
6. Check A21J9 for the signal shown.

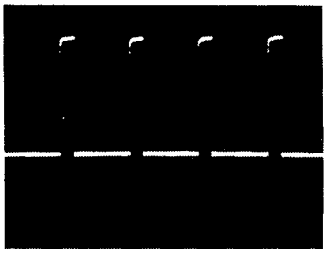

A21J9

5 usec/DIV
.1 volts/DIV

10:1 probe (ac coupled)

7. Reconnect cable to A21J9.

## 8-16. 10 MHz Signal Test.

1. Turn the 3585 power on.
2. Disconnect cables from A21J3 and A21J4.
3. Check A21J3 and A21J4 for the signal shown.

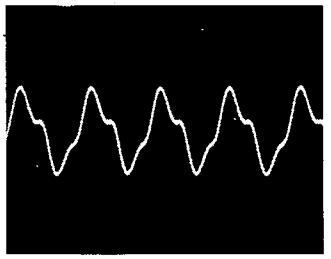

A21J3 & A21J4

.05 usec/DIV
.05 volts/DIV

10:1 probe (ac coupled)

4. Reconnect both cables.
5. Disconnect cable from A21J5.
6. Check A21J5 for the signal shown.

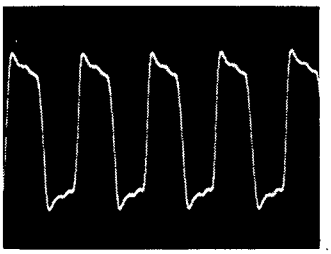

A21J5

5 usec/DIV
.2 volts/DIV

10:1 probe (ac coupled)

7. Reconnect cable to A21J5.
8. Disconnect cable from A21J6.
9. Check A21J6 for the signal shown.

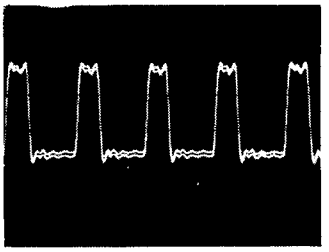

A21J6

.05 usec/DIV
.05 volts/DIV

10:1 probe (ac coupled)

10. Reconnect cable to A21J6.

## 8-17. 90 MHz Signal Test.

1. Turn the 3585 power on.

2. Disconnect cables from A21J1 and A21J2.

3. Check A21J1 and A21J2 for the signal shown.

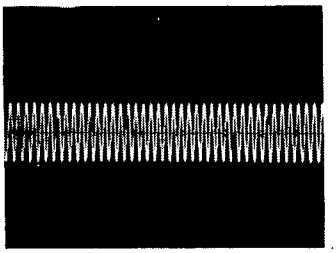

A21J1 & A21J2

.05 usec/DIV
.05 volts/DIV

10:1 probe (ac coupled)

4. Reconnect both cables.

## 8-18. Local Oscillator (SG B-2, B-3, B-4, B-5) H

1. Turn the 3585 power on.

2. Set the 3585 as follows:

INSTRUMENT PRESET
RES BW.....3 kHz

3. Check that the FRN LED and SUM LED on the A34 board are blinking, and the STEP LED and REF LED are off.

4. Set the 3585 as follows:

RES BW.....10 kHz

5. Check that the FRN LED on the A34 board is blinking, and all other LEDs are off.

6. Set the 3585 as follows:

SWEEP ..... manual

7. Check that all LEDs on the A34 board are off.

Table 8-4 will assist you in isolating failures by interpreting the various combinations of LEDs.

**Table 8-4. Loop Fault Analysis**

| Multiple Loop (RBW ≤ 3 kHz) | | Single Loop (RBW ≥ 10 kHz) | |
|---|---|---|---|
| FRN LED | SUM LED | FRN LED | Potential Problem Area |
| good | good | bad | A31, 27, 24, and (A32 bias) |
| good | bad | good | A24, 25, 27, 28, (A23, 26, 31) |
| good | bad | bad | A27, 24, 22, (A31) |
| bad | good | good | A31, (A32 S/H) |
| bad | good | bad | A31, 33, 32, 34, A21, (A27) |
| bad | bad | good | A31, (A32 S/H) |
| bad | bad | bad | A31, 33, 32, 34, A21, (A27) |
| good = blinking bad = on or off | | | |
| REF LED on: A21 is bad | | | |
| STEP LED on: A21, 23, 26, (A27) bad | | | |

**NOTE**

*Potential problem boards are listed in order of most probable cause. If possible, board substitution is the fastest way to identify failures in the LO section of the instrument.*

## 8-19. Switching Power Supplies (SG G-1,2)

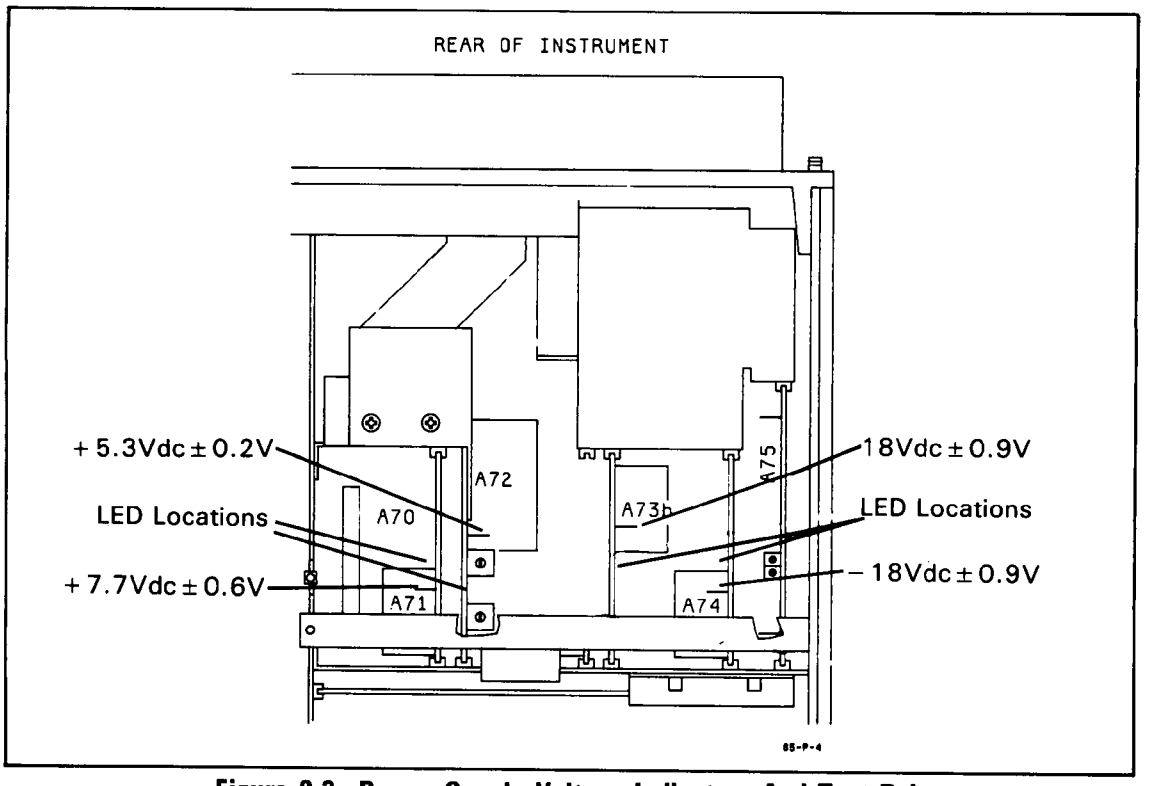


**Figure 8-3. Power Supply Voltage Indicators And Test Points**

## 8-20. Go/No Test

1. Turn the 3585 power on.

2. On the A71, A72, A73b, and A74 boards, check that the Green LED is illuminated, and that the Yellow LED is not illuminated.

**NOTE**

*Illumination of the Green LED indicates that dc voltage is present. It does not indicate that the voltage is within specified limits.*

*Illumination of the Yellow LED indicates that dc voltage generated by the specific board has been shut-down due to excessive current being drawn from the supply.*

## 8-21. Voltage Test

1. Turn the 3585 power on.

2. Check the following test points for the voltages indicated.

**Table 8-5. Power Supply Voltages Test**

| Power Supply | Test Point | Required Voltage |
|---|---|---|
| + 7.7V | A71P1 | +7.7V ± 0.6V |
| + 5.0V | A72TP1 | +5.3V ± 0.2V |
| +18.0V | A73bTP1 | +18V ± 0.9V |
| −18.0V | A74TP1 | −18V ± 0.9V |

## 8-22. Tracking Generator (SG E) J

1. Set the 3585 as follows:

INSTRUMENT PRESET
MANUAL.....10 MHz
RES BW.....3 kHz
TRACKING GENERATOR AMPLITUDE.....−11 dBm

2. Signal at Tracking Generator Output should read approximately 0.5V p-p at 10 MHz (no load).

3. Set the 3585 as follows:

TRACKING GENERATOR AMPLITUDE.....0 dBm

4. Signal at Tracking Generator Output should read approximately 1.5V p-p at 10 MHz (no load)

5. Set the 3585 as follows:

RES BW.....10 kHz

6. Repeat steps 2 through 4.

## LIST OF SCHEMATICS

| Board Designator | Schematic Number | Schematic Name |
|---|---|---|
| A1 | A-1a | Input/Conversion |
| A1 | A-1b | Input/Conversion |
| A2-A6c | A-2 | Conversion Section |
| A14 | A-4 | Log Amplifier |
| A15 | A-5 | Video Filter |
| A16 | A-6 | Analog-To-Digital Converter |
| A17 | A-3a | IF Filter No. 1 |
| A18 | A-3b | IF Gain |
| A19 | A-3c | IF Filter No. 2 |
| A21 | B-1a | 90/10 MHz/Ref |
| A22 | B-2a | First LO VTO |
| A23 | B-3a | Step Synthesizer VTO |
| A24 | B-2b | First LO Buffer |
| A25 | B-2c | Sum Loop Mixer |
| A26 | B-3b | Step Phase Detector |
| A27 | B-2d | First LO VTO Control |
| A28 | B-2e | Sum Loop Phase Detector |
| A31 | B-4a | VTO and Dividers |
| A32 | B-4b | Analog |
| A33 | B-4c | Divided By N Counter |
| A34 | B-5 | Interface And Trigger |
| A49 | C-1 | RAM Board |
| A82 | C-2a | Central Processor |
| A82 | C-2b | Central Processor Support Circuits |
| A83 | C-3 | I/O Board |
| A83 | F | HP-IB Interface |
| A87 | C-4 | Keyboard |
| A50/A51 | E-1 | Phase Detector |
| A52/A53 | E-2 | Tracking Generator/100.35 MHz VCO |
| A85 | D-1 | Digital Display Driver |
| A86 | D-2 | Analog Display Driver |
| A65/A66 | D-3b | Hi Voltage Board |
| A67 | D-3a | XYZ Board |
| A71 | G-2a | +7.7V Power Supply |
| A72 | G-2b | +5V Power Supply |
| A73 | G-2c | +18V Power Supply |
| A74 | G-2d | −18V Power Supply |
| A75 | G-1a | Power Supply Control |
| A89 | G-1b | Power Distribution |
| A81 | B-1b | Oven Oscillator |

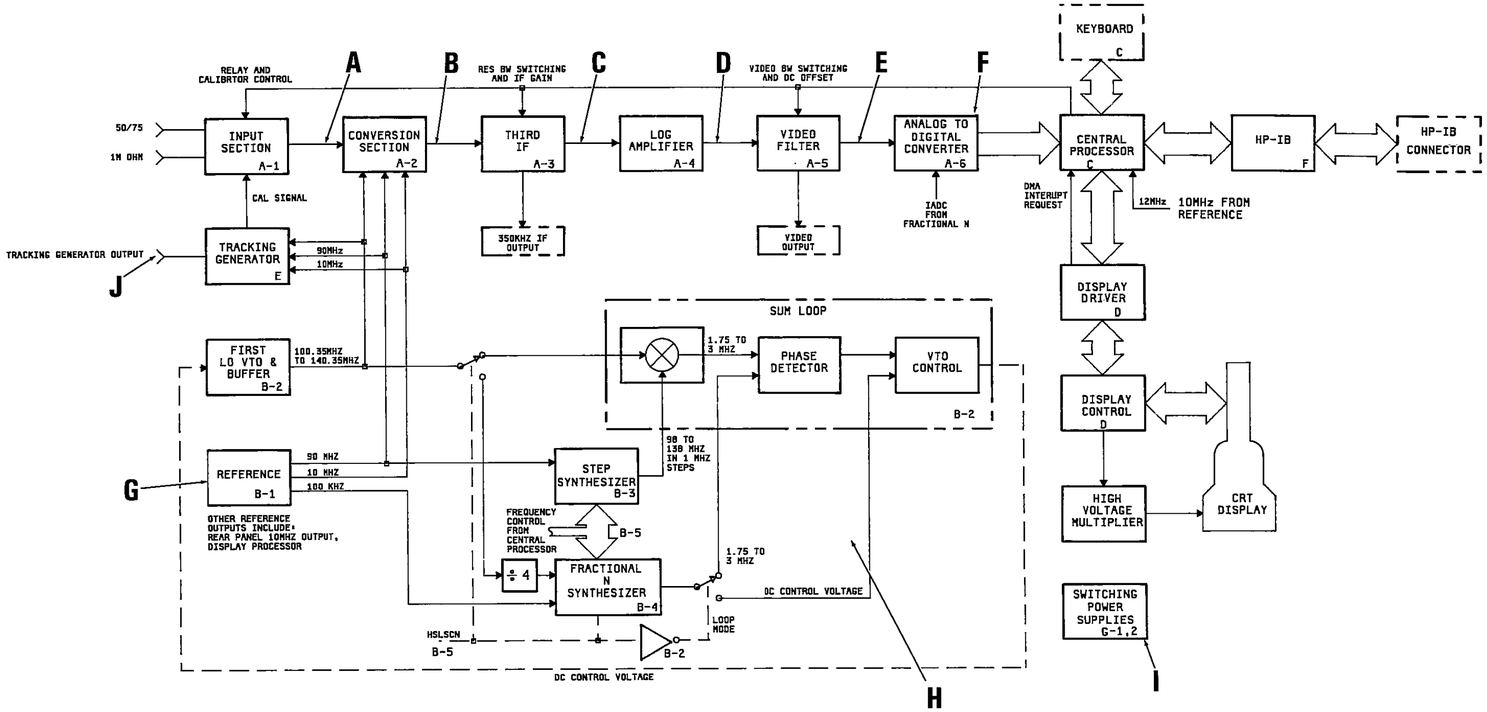


Figure 8-4. Block Diagram

# SECTION IX
# REPLACEABLE PARTS

# SECTION IX
# REPLACEABLE PARTS

## 9-1. INTRODUCTION

This section contains information for ordering replacement parts. Table 9-3 lists the parts in alphanumeric order of their reference designators and provides the following information:

a. HP Part Number.

b. Total quantity used in the instrument (Qty column). The total quantity of a part is given the first time the part number appears.

c. Description of the part. (See Table 9-1 for abbreviations.)

d. Typical manufacturer of the part in a five-digit code. (See Table 9-2 for list of manufacturers.)

e. Manufacturer's part number.

## 9-2. Chassis Mounted and Miscellaneous Parts

Chassis mounted components, mechanical parts and miscellaneous parts not having reference designators are listed near the end of Table 9-3. Exploded view drawings showing chassis and chassis mounted parts are at the end of this manual section.

## 9-3. ORDERING INFORMATION

To obtain replacement parts, address your order or inquiry to the nearest Hewlett-Packard Sales and Service Office located in the back of the book. Identify parts by their HP Part Numbers. Include the instrument model and serial number.

## 9-4. Non-Listed Parts

To obtain a part that is not listed, include:

a. Instrument model number.
b. Instrument serial number.
c. Description of the part.
d. Function and location of the part.

## Table 9-1. Standard Abbreviations

**ABBREVIATIONS**

| | |
|---|---|
| Ag | silver |
| Al | aluminum |
| A | ampere(s) |
| Au | gold |
| C | capacitor |
| cer | ceramic |
| coef | coefficient |
| com | common |
| comp | composition |
| conn | connection |
| dep | deposited |
| DPDT | double-pole double-throw |
| DPST | double-pole single-throw |
| elect | electrolytic |
| encap | encapsulated |
| F | farad(s) |
| FET | field effect transistor |
| fxd | fixed |
| GaAs | gallium arsenide |
| GHz | gigahertz = $10^{+9}$ hertz |
| gd | guard(ed) |
| Ge | germanium |
| gnd | ground(ed) |
| H | henry(ies) |
| Hg | mercury |
| Hz | hertz (cycle(s) per second) |
| ID | inside diameter |
| impg | impregnated |
| incd | incandescent |
| ins | insulation(ed) |
| kΩ | kilohm(s) = $10^{+3}$ ohms |
| kHz | kilohertz = $10^{+3}$ hertz |
| L | inductor |
| lin | linear taper |
| log | logarithmic taper |
| mA | milliampere(s) = $10^{-3}$ amperes |
| MHZ | megahertz = $10^{+6}$ hertz |
| MΩ | megohm(s) = $10^{+6}$ ohms |
| met flm | metal film |
| mfr | manufacturer |
| ms | millisecond |
| mtg | mounting |
| mV | millivolt(s) = $10^{-3}$ volts |
| μF | microfarad(s) |
| μs | microsecond(s) |
| μV | microvolt(s) = $10^{-6}$ volts |
| my | Mylar ® |
| nA | nanoampere(s) = $10_{-9}$ amperes |
| NC | normally closed |
| Ne | neon |
| NO | normally open |
| NPO | negative positive zero (zero temperature coefficient) |
| ns | nanosecond(s) = $10^{-9}$ seconds |
| nsr | not separately replaceable |
| Ω | ohm(s) |
| obd | order by description |
| OD | outside diameter |
| p | peak |
| pA | picoampere(s) |
| pc | printed circuit |
| pF | picofarad(s) $10^{-12}$ farads |
| piv | peak inverse voltage |
| p/o | part of |
| pos | position(s) |
| poly | polystyrene |
| pot | potentiometer |
| p-p | peak-to-peak |
| ppm | parts per million |
| prec | precision (temperature coefficient, long term stability and/or tolerance) |
| R | resistor |
| Rh | rhodium |
| rms | root-mean-square |
| rot | rotary |
| Se | selenium |
| sect | section(s) |
| Si | silicon |
| sl | slide |
| SPDT | single-pole double-throw |
| SPST | single-pole single-throw |
| Ta | tantalum |
| TC | temperature coefficient |
| $TiO_2$ | titanium dioxide |
| tog | toggle |
| tol | tolerance |
| trim | trimmer |
| TSTR | transistor |
| V | volt(s) |
| vacw | alternating current working voltage |
| var | variable |
| vdcw | direct current working voltage |
| W | watt(s) |
| w/ | with |
| wiv | working inverse voltage |
| w/o | without |
| ww | wirewound |
| * | optimum value selected at factory, average value shown (part may be omitted) |
| ** | no standard type number assigned selected or special type |

® Dupont de Nemours

**DESIGNATORS**

| | |
|---|---|
| A | assembly |
| B | motor |
| BT | battery |
| C | capacitor |
| CR | diode or thyristor |
| DL | delay line |
| DS | lamp |
| E | misc electronic part |
| F | fuse |
| FL | filter |
| HR | heater |
| IC | integrated circuit |
| J | jack |
| K | relay |
| L | inductor |
| M | meter |
| MP | mechanical part |
| P | plug |
| Q | transistor |
| QCR | transistor-diode |
| R(p) | resistor(pack) |
| RT | thermistor |
| S | switch |
| T | transformer |
| TB | terminal board |
| TC | thermocouple |
| TP | test point |
| TS | terminal strip |
| U | microcircuit |
| V | vacuum tube, neon bulb, photocell, etc. |
| W | cable |
| X | socket |
| XDS | lampholder |
| XF | fuseholder |
| Y | crystal |
| Z | network |

## Table 9-2. Code List of Manufacturers

| Manufacturer Number | Manufacturer Name | Address |
|---|---|---|
| 00046 | Unitrode Computer Products Corp | Methuen, MA 01844 |
| 00853 | Sangamo Elec co S Carolina Div | Pickens, SC 29671 |
| 01121 | Allen-Bradley Co | Milwaukee, WI 53204 |
| 01295 | Texas Instr Inc Semicond Cmpnt Div | Dallas, TX 75222 |
| 01928 | RCA Corp Solid State Div | Somerville, NJ 08876 |
| 02111 | Spectrol Electronics Corp | City of Ind, CA 91745 |
| 02289 | HI-G Inc | Windsor Locks, CT 06096 |
| 02660 | Amphenol Sales Div of Bunker-Ramo | Broadview, IL 60153 |
| 03888 | DKI Pyrofilm Corp | Whippany, NJ 07981 |
| 04713 | Motorola Semiconductor Products | Phoenix, AZ 85062 |
| 06001 | GE Co Elek Cap & Bat Prod Dept | Irmo, SC 29063 |
| 06915 | Richco Plastic Co | Chicago, IL 60646 |
| 07263 | Fairchild Semiconductor Div | Mountain View, CA 94042 |
| 07716 | TRW Inc Burlington Div | Burlington, IA 52601 |
| 08113 | Kahgan Electronics Corp | Hempstead, NY 11551 |
| 11532 | Teledyne Relays | Hawthorne, CA 90250 |
| 12954 | Stemens Corp Components Group | Scottsdale, AZ 95252 |
| 12969 | Unitrode Corp | Watertown, MA 02172 |
| 13606 | Sprague Elect Co Semiconductor Div | Concord, NH 03301 |
| 14099 | Semtech Corp | Newbury Park, CA 91320 |
| 16299 | Corning Gl Wk Elec Cmpnt Div | Raleigh, NC 27604 |
| 17856 | Siliconix Inc | Santa Clara, CA 95054 |
| 18324 | Signetics Corp | Sunnyvale, CA 94086 |
| 19701 | Mepco/Electra Corp | Mineral Wells, TX 76067 |
| 22526 | Berg Electronic Inc | Cumberland, PA 17070 |
| 23936 | Pamotor Div William J Purdy | Burlingame, CA 94010 |
| 24226 | Gowanda Electronics Corp | Gowanda, NY 14070 |
| 24355 | Analog Devices Inc | Norwood, MA 02062 |
| 24546 | Corning Glass Works (Bradford) | Bradford, PA 16701 |

**Table 9-2. Code List of Manufacturers (Cont'd)**

| Manufacturer Number | Manufacturer Name | Address |
|---|---|---|
| 26654 | Varadyne Inc | Santa Monica, CA 90404 |
| 27014 | National Semiconductor Corp | Santa Clara, CA 95051 |
| 27167 | Corning Glass Works (Wilmington( | Wilmington, NC 28401 |
| 27264 | Molex Products Co. | Downers Grove, IL 60515 |
| 28480 | Hewlett-Packard Co Corporate HQ | Palo Alto, CA 94304 |
| 29832 | Teledyne Philbrick Nexus | Dedham, MA 02026 |
| 32997 | Bourns Inc Trimpot Prod Div | Riverside, CA 92507 |
| 34335 | Advanced Micro Devices Inc | Sunnyvale, CA 94086 |
| 34371 | Harris Semicon Div Harris-Intertype | Melbourne, FL 32901 |
| 34785 | Dek Inc | Chicago, IL 60185 |
| 46384 | Penn Engineering & Mfg Corp | Doylestown, PA 18901 |
| 51642 | Centre Engineering Inc | State College, OA 16801 |
| 52072 | Circuit Assembly Corp | Costa Mesa, CA 92626 |
| 52763 | Stettner-Trush Inc | Cazenovia, NY 13035 |
| 53021 | Sangamo Electric Co | Springfield, IL 62702 |
| 54294 | Cutler-Hammer-Inc Shallcross Mfg Co | Selma, NC 27576 |
| 55576 | Synertek | Santa Clara, CA 95051 |
| 56289 | Sprague Electric Co | North Adams, MA 01247 |
| 72136 | Electro Motive Corp Sub IEC | Willimantic, CT 06226 |
| 72982 | Erie Technological Products Inc | Erie, PA 16512 |
| 73138 | Beckman Instruments Inc Helipot Div | Fullerton, CA 92634 |
| 73957 | Groov-Pin Corp | Ridgefield, NJ 07657 |
| 74970 | Johnson E F Co | Waseca, MN 56093 |
| 75915 | Littelfuse Inc | Des Plaines, IL 60016 |
| 80103 | Lambda Electronics Corp | Melville, NY 11746 |
| 84411 | TRW Capacitor Div | Ogallala, NE 69153 |
| 91637 | Dale Electronics Inc | Columbus, NE 68601 |
| 98291 | Sealectro Corp | Mamroneck, NY 10544 |
| 99848 | Wilco Corp | Indianapolis, IN 46222 |

# Table 9-3. Replaceable Parts

| Reference Designation | HP Part Number | C D | Qty. | Description | Mfr. Code | Mfr. Part Number |
|---|---|---|---|---|---|---|
| | 3585B | 5 | 1 | SPECTRUM ANALYZER | 28480 | 3585B |
| A1 | 03585-66501 | 2 | 1 | INPUT PC BOARD ASSEMBLY | 28480 | 03585-66501 |
| A1C1 | 0160-6509 | 6 | 31 | C-F .1UF --% 100V CERMLr | 28480 | RPE122-977Z5U104Z100V |
| A1C2 | 0160-6509 | 6 | | C-F .1UF --% 100V CERMLr | 28480 | RPE122-977Z5U104Z100V |
| A1C3 | 0160-6509 | 6 | | C-F .1UF --% 100V CERMLr | 28480 | RPE122-977Z5U104Z100V |
| A1C4 | 0160-6509 | 6 | | C-F .1UF --% 100V CERMLr | 28480 | RPE122-977Z5U104Z100V |
| A1C5 | 0160-6509 | 6 | | C-F .1UF --% 100V CERMLr | 28480 | RPE122-977Z5U104Z100V |
| A1C6 | 0160-2055 | 9 | 25 | CAPACITOR-FXD .01UF +80-20% 100VDC CER | 59660 | 805-504 Y5V 103Z |
| A1C7* | 0160-2259 | 5 | 0 | CAPACITOR-FXD 12PF +-5% 500VDC CER 0+-3028480 | 28480 | 0160-2259 |
| A1C7* | 0160-2263 | 1 | 0 | CAPACITOR-FXD 18PF +-5% 500VDC CER 0+-3052763 | 52763 | |
| A1C7* | 0160-6849 | 7 | 0 | C-F 22F 5% 500V CERTBr | 59660 | 301 089 COG0 220J |
| A1C7* | 0160-2261 | 9 | 1 | CAPACITOR-FXD 15PF +-5% 500VDC CER 0+-3052763 | 52763 | |
| A1C8 | 0160-2055 | 9 | | CAPACITOR-FXD .01UF +80-20% 100VDC CER | 59660 | 805-504 Y5V 103Z |
| A1C9 | 0160-6509 | 6 | | C-F .1UF --% 100V CERMLr | 28480 | RPE122-977Z5U104Z100V |
| A1C10* | 0160-2259 | 5 | | CAPACITOR-FXD 12PF +-5% 500VDC CER 0+-3028480 | 28480 | 0160-2259 |
| A1C10* | 0160-2263 | 1 | | CAPACITOR-FXD 18PF +-5% 500VDC CER 0+-3052763 | 52763 | |
| A1C10* | 0160-6849 | 7 | | C-F 22F 5% 500V CERTBr | 59660 | 301 089 COG0 220J |
| A1C10* | 0160-6872 | 6 | 2 | C-F 13PF 5% 500V CERTBr | 59660 | 301 089 COG0 130J |
| A1C10* | 0160-6874 | 8 | 1 | C-F 20PF 5% 500V CERTBr | 59660 | 301 089 COG0 200J |
| A1C10* | 0160-6872 | 6 | | C-F 13PF 5% 500V CERTBr | 59660 | 301 089 COG0 130J |
| A1C11 | 0160-2055 | 9 | | CAPACITOR-FXD .01UF +80-20% 100VDC CER | 59660 | 805-504 Y5V 103Z |
| A1C12 | 0160-6509 | 6 | | C-F .1UF --% 100V CERMLr | 28480 | RPE122-977Z5U104Z100V |
| A1C13 | 0160-6509 | 6 | | C-F .1UF --% 100V CERMLr | 28480 | RPE122-977Z5U104Z100V |
| A1C14 | 0160-2055 | 9 | | CAPACITOR-FXD .01UF +80-20% 100VDC CER | 59660 | 805-504 Y5V 103Z |
| A1C15 | 0160-2055 | 9 | | CAPACITOR-FXD .01UF +80-20% 100VDC CER | 59660 | 805-504 Y5V 103Z |
| A1C16 | 0160-2055 | 9 | | CAPACITOR-FXD .01UF +80-20% 100VDC CER | 59660 | 805-504 Y5V 103Z |
| A1C17 | 0160-6509 | 6 | | C-F .1UF --% 100V CERMLr | 28480 | RPE122-977Z5U104Z100V |
| A1C18 | 0121-0451 | 3 | 7 | CAPACITOR-V TRMR-AIR 1.7-11PF 175V | 74970 | 187-0106-028 |
| A1C19 | 0160-0196 | 5 | 2 | CAPACITOR-FXD 24PF +-5% 300VDC MICA | 09023 | |
| A1C20 | 0160-6870 | 4 | 1 | C-F 8.2PF --% 500V CERTBr | 59660 | 301 089 COH0 829C |
| A1C21 | 0121-0451 | 3 | | CAPACITOR-V TRMR-AIR 1.7-11PF 175V | 74970 | 187-0106-028 |
| A1C22 | 0160-6865 | 7 | 2 | C-F 5.1PF --% 500V CERTBr | 59660 | 301 089 COH0 519C |
| A1C23 | 0160-2055 | 9 | | CAPACITOR-FXD .01UF +80-20% 100VDC CER | 59660 | 805-504 Y5V 103Z |
| A1C24 | 0160-6509 | 6 | | C-F .1UF --% 100V CERMLr | 28480 | RPE122-977Z5U104Z100V |
| A1C25 | 0160-6869 | 1 | 1 | C-F 7.5PF --% 500V CERTBr | 59660 | 301 089 COH0 759C |
| A1C26 | 0160-0196 | 5 | | CAPACITOR-FXD 24PF +-5% 300VDC MICA | 09023 | |
| A1C27 | 0121-0451 | 3 | | CAPACITOR-V TRMR-AIR 1.7-11PF 175V | 74970 | 187-0106-028 |
| A1C28 | 0160-6865 | 7 | | C-F 5.1PF --% 500V CERTBr | 59660 | 301 089 COH0 519C |
| A1C29 | 0160-0128 | 3 | 6 | CAPACITOR-FXD 2.2UF +-20% 50VDC CER | 13606 | 3C37Z5U225M050A |
| A1C31 | 0160-6872 | 6 | | C-F 13PF 5% 500V CERTBr | 59660 | 301 089 COG0 130J |
| A1C32 | 0160-0128 | 3 | | CAPACITOR-FXD 2.2UF +-20% 50VDC CER | 13606 | 3C37Z5U225M050A |
| A1C33 | 0150-0050 | 9 | 2 | CAPACITOR-FXD 1000PF +80-20% 1KVDC CER | 59660 | 838-557-X5R-102Z |
| A1C34 | 0160-6509 | 6 | | C-F .1UF --% 100V CERMLr | 28480 | RPE122-977Z5U104Z100V |
| A1C35 | 0160-0205 | 7 | 1 | CAPACITOR-FXD 10PF +-5% 500VDC MICA | 09023 | |
| A1C36 | 0160-6509 | 6 | | C-F .1UF --% 100V CERMLr | 28480 | RPE122-977Z5U104Z100V |
| A1C37 | 0160-6509 | 6 | | C-F .1UF --% 100V CERMLr | 28480 | RPE122-977Z5U104Z100V |
| A1C38 | 0180-0197 | 8 | 3 | CAPACITOR-FXD 2.2UF+-10% 20VDC TA | 13606 | 150D225X9020A2-DYS |
| A1C39 | 0160-0128 | 3 | | CAPACITOR-FXD 2.2UF +-20% 50VDC CER | 13606 | 3C37Z5U225M050A |
| A1C40 | 0150-0050 | 9 | | CAPACITOR-FXD 1000PF +80-20% 1KVDC CER | 59660 | 838-557-X5R-102Z |
| A1C41 | 0160-2055 | 9 | | CAPACITOR-FXD .01UF +80-20% 100VDC CER | 59660 | 805-504 Y5V 103Z |
| A1C42 | 0160-2055 | 9 | | CAPACITOR-FXD .01UF +80-20% 100VDC CER | 59660 | 805-504 Y5V 103Z |
| A1C43 | 0160-2055 | 9 | | CAPACITOR-FXD .01UF +80-20% 100VDC CER | 59660 | 805-504 Y5V 103Z |
| A1C44 | 0160-2055 | 9 | | CAPACITOR-FXD .01UF +80-20% 100VDC CER | 59660 | 805-504 Y5V 103Z |
| A1C45 | 0160-2055 | 9 | | CAPACITOR-FXD .01UF +80-20% 100VDC CER | 59660 | 805-504 Y5V 103Z |
| A1C46 | 0160-2055 | 9 | | CAPACITOR-FXD .01UF +80-20% 100VDC CER | 59660 | 805-504 Y5V 103Z |
| A1C47 | 0160-2055 | 9 | | CAPACITOR-FXD .01UF +80-20% 100VDC CER | 59660 | 805-504 Y5V 103Z |
| A1C48 | 0160-6509 | 6 | | C-F .1UF --% 100V CERMLr | 28480 | RPE122-977Z5U104Z100V |
| A1C49 | 0180-0210 | 6 | 11 | CAPACITOR-FXD 3.3UF+-20% 15VDC TA | 13606 | 150D335X0015A2-DYS |
| A1C50* | 0160-2259 | 5 | | CAPACITOR-FXD 12PF +-5% 500VDC CER 0+-3028480 | 28480 | 0160-2259 |
| A1C50* | 0160-2263 | 1 | | CAPACITOR-FXD 18PF +-5% 500VDC CER 0+-3052763 | 52763 | |
| A1C50* | 0160-6849 | 7 | | C-F 22F 5% 500V CERTBr | 59660 | 301 089 COG0 220J |
| A1C50* | 0160-6872 | 6 | | C-F 13PF 5% 500V CERTBr | 59660 | 301 089 COG0 130J |

See introduction to this section for ordering information
* Indicates one of several possible values installed

# Table 9-3. Replaceable Parts

| Reference Designation | HP Part Number | C D | Qty. | Description | Mfr. Code | Mfr. Part Number |
|---|---|---|---|---|---|---|
| A1C50* | 0160-6874 | 8 | | C-F 20PF 5% 500V CERTBr | 59660 | 301 089 COG0 200J |
| A1C50* | 0160-6874 | 8 | | C-F 20PF 5% 500V CERTBr | 59660 | 301 089 COG0 200J |
| A1C51 | 0180-0210 | 6 | | CAPACITOR-FXD 3.3UF+-20% 15VDC TA | 13606 | 150D335X0015A2-DYS |
| A1C52 | 0180-1701 | 2 | 2 | CAPACITOR-FXD 6.8UF+-20% 6VDC TA | 13606 | 150D685X0006A2-DYS |
| A1C53 | 0160-6509 | 6 | | C-F .1UF --% 100V CERMLr | 28480 | RPE122-977Z5U104Z100V |
| A1C54 | 0180-0210 | 6 | | CAPACITOR-FXD 3.3UF+-20% 15VDC TA | 13606 | 150D335X0015A2-DYS |
| A1C55 | 0160-6509 | 6 | | C-F .1UF --% 100V CERMLr | 28480 | RPE122-977Z5U104Z100V |
| A1C56 | 0180-0210 | 6 | | CAPACITOR-FXD 3.3UF+-20% 15VDC TA | 13606 | 150D335X0015A2-DYS |
| A1C57 | 0160-6509 | 6 | | C-F .1UF --% 100V CERMLr | 28480 | RPE122-977Z5U104Z100V |
| A1C58 | 0160-6509 | 6 | | C-F .1UF --% 100V CERMLr | 28480 | RPE122-977Z5U104Z100V |
| A1C59 | 0160-0128 | 3 | | CAPACITOR-FXD 2.2UF +-20% 50VDC CER | 13606 | 3C37Z5U225M050A |
| A1C61 | 0160-2150 | 5 | 2 | CAPACITOR-FXD 33PF +-5% 300VDC MICA | 00853 | |
| A1C62 | 0160-6509 | 6 | | C-F .1UF --% 100V CERMLr | 28480 | RPE122-977Z5U104Z100V |
| A1C63 | 0160-6509 | 6 | | C-F .1UF --% 100V CERMLr | 28480 | RPE122-977Z5U104Z100V |
| A1C64 | 0160-6509 | 6 | | C-F .1UF --% 100V CERMLr | 28480 | RPE122-977Z5U104Z100V |
| A1C65 | 0160-6509 | 6 | | C-F .1UF --% 100V CERMLr | 28480 | RPE122-977Z5U104Z100V |
| A1C66 | 0160-6509 | 6 | | C-F .1UF --% 100V CERMLr | 28480 | RPE122-977Z5U104Z100V |
| A1C67 | 0180-0375 | 4 | 2 | CAPACITOR-FXD 68UF+-10% 20VDC TA | 13606 | 150D686X9020S2-DYS |
| A1C68 | 0180-0210 | 6 | | CAPACITOR-FXD 3.3UF+-20% 15VDC TA | 13606 | 150D335X0015A2-DYS |
| A1C69 | 0180-0210 | 6 | | CAPACITOR-FXD 3.3UF+-20% 15VDC TA | 13606 | 150D335X0015A2-DYS |
| A1C70 | 0180-0375 | 4 | | CAPACITOR-FXD 68UF+-10% 20VDC TA | 13606 | 150D686X9020S2-DYS |
| A1C72 | 0160-2055 | 9 | | CAPACITOR-FXD .01UF +80-20% 100VDC CER | 59660 | 805-504 Y5V 103Z |
| A1C73 | 0180-1714 | 7 | 2 | CAPACITOR-FXD 330UF+-10% 6VDC TA | 13606 | 150D337X9006S2-DYS |
| A1C74 | 0180-1714 | 7 | | CAPACITOR-FXD 330UF+-10% 6VDC TA | 13606 | 150D337X9006S2-DYS |
| A1C75 | 0180-0228 | 6 | 2 | CAPACITOR-FXD 22UF+-10% 15VDC TA | 13606 | 150D226X9015B2-DYS |
| A1C76 | 0180-0228 | 6 | | CAPACITOR-FXD 22UF+-10% 15VDC TA | 13606 | 150D226X9015B2-DYS |
| A1C77 | 0180-0210 | 6 | | CAPACITOR-FXD 3.3UF+-20% 15VDC TA | 13606 | 150D335X0015A2-DYS |
| A1C78 | 0160-6509 | 6 | | C-F .1UF --% 100V CERMLr | 28480 | RPE122-977Z5U104Z100V |
| A1C79 | 0160-2055 | 9 | | CAPACITOR-FXD .01UF +80-20% 100VDC CER | 59660 | 805-504 Y5V 103Z |
| A1C80 | 0160-6506 | 3 | 1 | C-F .1UF 20% 50V CERMLr | 28480 | RPE121-978Z5U104M50V |
| A1C81 | 0160-2055 | 9 | | CAPACITOR-FXD .01UF +80-20% 100VDC CER | 59660 | 805-504 Y5V 103Z |
| A1C82* | 0160-2259 | 5 | | CAPACITOR-FXD 12PF +-5% 500VDC CER 0+-3028480 | 28480 | 0160-2259 |
| A1C82* | 0160-2263 | 1 | | CAPACITOR-FXD 18PF +-5% 500VDC CER 0+-3052763 | 52763 | |
| A1C82* | 0160-6849 | 7 | | C-F 22F 5% 500V CERTBr | 59660 | 301 089 COG0 220J |
| A1C82* | 0160-6850 | 0 | 0 | C-F 24F 5% 500V CERTBr | 59660 | 301 089 COG0 240J |
| A1C82* | 0160-6866 | 8 | 0 | C-F 5.6PF --% 500V CERTBr | 59660 | 301 089 COH0 569C |
| A1C82* | 0160-6868 | 0 | 0 | C-F 6.8PF --% 500V CERTBr | 59660 | 301 089 COH0 689C |
| A1C82* | 0160-6870 | 4 | | C-F 8.2PF --% 500V CERTBr | 59660 | 301 089 COH0 829C |
| A1C82* | 0160-6872 | 6 | | C-F 13PF 5% 500V CERTBr | 59660 | 301 089 COG0 130J |
| A1C82* | 0160-6874 | 8 | | C-F 20PF 5% 500V CERTBr | 59660 | 301 089 COG0 200J |
| A1C82* | 0160-2257 | 3 | 1 | CAPACITOR-FXD 10PF +-5% 500VDC CER 0+-6052763 | 52763 | |
| A1C83 | 0121-0451 | 3 | | CAPACITOR-V TRMR-AIR 1.7-11PF 175V | 74970 | 187-0106-028 |
| A1C84 | 0160-6873 | 7 | 1 | C-F 16PF 5% 500V CERTBr | 59660 | 301 089 COG0 160J |
| A1C85 | 0160-2200 | 6 | 1 | CAPACITOR-FXD 43PF +-5% 300VDC MICA | 00853 | |
| A1C86 | 0121-0451 | 3 | | CAPACITOR-V TRMR-AIR 1.7-11PF 175V | 74970 | 187-0106-028 |
| A1C87 | 0160-2241 | 5 | 1 | CAPACITOR-FXD 2.2PF +-.25PF 500VDC CER | 52763 | |
| A1C88 | 0140-0204 | 4 | 1 | CAPACITOR-FXD 47PF +-5% 500VDC MICA | 09023 | |
| A1C89 | 0121-0451 | 3 | | CAPACITOR-V TRMR-AIR 1.7-11PF 175V | 74970 | 187-0106-028 |
| A1C90 | 0160-6509 | 6 | | C-F .1UF --% 100V CERMLr | 28480 | RPE122-977Z5U104Z100V |
| A1C91 | 0160-2306 | 3 | 1 | CAPACITOR-FXD 27PF +-5% 300VDC MICA | 00853 | |
| A1C92 | 0121-0451 | 3 | | CAPACITOR-V TRMR-AIR 1.7-11PF 175V | 74970 | 187-0106-028 |
| A1C93 | 0180-0229 | 7 | 1 | CAPACITOR-FXD 33UF+-10% 10VDC TA | 13606 | 150D336X9010B2-DYS |
| A1C94 | 0180-0210 | 6 | | CAPACITOR-FXD 3.3UF+-20% 15VDC TA | 13606 | 150D335X0015A2-DYS |
| A1C95 | 0160-6509 | 6 | | C-F .1UF --% 100V CERMLr | 28480 | RPE122-977Z5U104Z100V |
| A1C96 | 0180-0210 | 6 | | CAPACITOR-FXD 3.3UF+-20% 15VDC TA | 13606 | 150D335X0015A2-DYS |
| A1C97 | 0180-0106 | 9 | 1 | CAPACITOR-FXD 60UF+-20% 6VDC TA | 13606 | 150D606X0006B2-DYS |
| A1C98 | 0160-6509 | 6 | | C-F .1UF --% 100V CERMLr | 28480 | RPE122-977Z5U104Z100V |
| A1C100 | 0160-2055 | 9 | | CAPACITOR-FXD .01UF +80-20% 100VDC CER | 59660 | 805-504 Y5V 103Z |
| A1C101 | 0160-2150 | 5 | | CAPACITOR-FXD 33PF +-5% 300VDC MICA | 00853 | |
| A1C102 | 0160-6509 | 6 | | C-F .1UF --% 100V CERMLr | 28480 | RPE122-977Z5U104Z100V |
| A1C103 | 0180-0210 | 6 | | CAPACITOR-FXD 3.3UF+-20% 15VDC TA | 13606 | 150D335X0015A2-DYS |
| A1C104 | 0160-6509 | 6 | | C-F .1UF --% 100V CERMLr | 28480 | RPE122-977Z5U104Z100V |
| A1C105 | 0180-0210 | 6 | | CAPACITOR-FXD 3.3UF+-20% 15VDC TA | 13606 | 150D335X0015A2-DYS |
| A1C106 | 0160-6509 | 6 | | C-F .1UF --% 100V CERMLr | 28480 | RPE122-977Z5U104Z100V |
| A1C107 | 0160-6509 | 6 | | C-F .1UF --% 100V CERMLr | 28480 | RPE122-977Z5U104Z100V |

See introduction to this section for ordering information
* Indicates one of several possible values installed

# Table 9-3. Replaceable Parts

| Reference Designation | HP Part Number | C D | Qty. | Description | Mfr. Code | Mfr. Part Number |
|---|---|---|---|---|---|---|
| A1C108 | 0160-0128 | 3 | | CAPACITOR-FXD 2.2UF +-20% 50VDC CER | 13606 | 3C37Z5U225M050A |
| A1C109 | 0160-2605 | 5 | 1 | CAPACITOR-FXD .02UF +80-20% 25VDC CER | 59660 | 5835-523 Y5U 203Z |
| A1C111 | 0160-0128 | 3 | | CAPACITOR-FXD 2.2UF +-20% 50VDC CER | 13606 | 3C37Z5U225M050A |
| A1C112 | 0180-1701 | 2 | | CAPACITOR-FXD 6.8UF+-20% 6VDC TA | 13606 | 150D685X0006A2-DYS |
| A1C113 | 0160-0174 | 9 | 1 | CAPACITOR-FXD .47UF +80-20% 50VDC CER | 04222 | SR935E474ZAA |
| A1C114 | 0160-2055 | 9 | | CAPACITOR-FXD .01UF +80-20% 100VDC CER | 59660 | 805-504 Y5V 103Z |
| A1C115 | 0160-2055 | 9 | | CAPACITOR-FXD .01UF +80-20% 100VDC CER | 59660 | 805-504 Y5V 103Z |
| A1C116 | 0160-2055 | 9 | | CAPACITOR-FXD .01UF +80-20% 100VDC CER | 59660 | 805-504 Y5V 103Z |
| A1C117 | 0160-2055 | 9 | | CAPACITOR-FXD .01UF +80-20% 100VDC CER | 59660 | 805-504 Y5V 103Z |
| A1C118 | 0160-2055 | 9 | | CAPACITOR-FXD .01UF +80-20% 100VDC CER | 59660 | 805-504 Y5V 103Z |
| A1C119 | 0160-2055 | 9 | | CAPACITOR-FXD .01UF +80-20% 100VDC CER | 59660 | 805-504 Y5V 103Z |
| A1C121 | 0180-0098 | 8 | 2 | CAPACITOR-FXD 100UF+-20% 20VDC TA | 13606 | 150D107X002OS2-DYS |
| A1C122 | 0180-0197 | 8 | | CAPACITOR-FXD 2.2UF+-10% 20VDC TA | 13606 | 150D225X9020A2-DYS |
| A1C123 | 0180-0197 | 8 | | CAPACITOR-FXD 2.2UF+-10% 20VDC TA | 13606 | 150D225X9020A2-DYS |
| A1C124 | 0160-2055 | 9 | | CAPACITOR-FXD .01UF +80-20% 100VDC CER | 59660 | 805-504 Y5V 103Z |
| A1C125 | 0180-0098 | 8 | | CAPACITOR-FXD 100UF+-20% 20VDC TA | 13606 | 150D107X002OS2-DYS |
| A1C130* | 0160-6521 | 2 | 0 | C-F 2.2PF --% 200V CERMLr | 28480 | RPE121-978C0G2R2C200V |
| A1C130* | 0160-6524 | 5 | 0 | C-F 6.8PF --% 200V CERMLr | 28480 | RPE121-978C0G6R8D200V |
| A1CR1 | 1901-0040 | 1 | 7 | DIODE-SWITCHING 30V 50MA 2NS DO-35 | 9N171 | |
| A1CR2 | 1901-0040 | 1 | | DIODE-SWITCHING 30V 50MA 2NS DO-35 | 9N171 | |
| A1CR3 | 1901-0025 | 2 | 2 | DIODE-GEN PRP 100V 200MA DO-7 | 9N171 | |
| A1CR4 | 1901-0025 | 2 | | DIODE-GEN PRP 100V 200MA DO-7 | 9N171 | |
| A1CR5 | 1902-0777 | 3 | 1 | DIODE-ZNR 1N825 6.2V 5% DO-7 PD=.4W | 04713 | |
| A1CR6 | 1902-3182 | 0 | 2 | DIODE-ZNR 12.1V 5% DO-35 PD=.4W | 04713 | |
| A1CR7 | 1902-3182 | 0 | | DIODE-ZNR 12.1V 5% DO-35 PD=.4W | 04713 | |
| A1CR8 | 1901-0050 | 3 | 7 | DIODE-SWITCHING 80V 200MA 2NS DO-35 | 9N171 | |
| A1CR9 | 1901-0050 | 3 | | DIODE-SWITCHING 80V 200MA 2NS DO-35 | 9N171 | |
| A1CR10 | 1902-0064 | 1 | 4 | DIODE-ZNR 7.5V 5% DO-35 PD=.4W TC=+.05% | 04713 | |
| A1CR13 | 1901-0050 | 3 | | DIODE-SWITCHING 80V 200MA 2NS DO-35 | 9N171 | |
| A1CR15 | 1901-0050 | 3 | | DIODE-SWITCHING 80V 200MA 2NS DO-35 | 9N171 | |
| A1CR16 | 1902-3085 | 2 | 1 | DIODE-ZNR 4.75V 5% DO-35 PD=.4W | 04713 | |
| A1CR17 | 1901-0050 | 3 | | DIODE-SWITCHING 80V 200MA 2NS DO-35 | 9N171 | |
| A1CR18 | 1901-0518 | 8 | 3 | DIODE-SCHOTTKY SM SIG | 28480 | 1901-0518 |
| A1CR19 | 1901-0518 | 8 | | DIODE-SCHOTTKY SM SIG | 28480 | 1901-0518 |
| A1CR20 | 1901-0518 | 8 | | DIODE-SCHOTTKY SM SIG | 28480 | 1901-0518 |
| A1CR21 | 1901-0040 | 1 | | DIODE-SWITCHING 30V 50MA 2NS DO-35 | 9N171 | |
| A1CR22 | 1901-0040 | 1 | | DIODE-SWITCHING 30V 50MA 2NS DO-35 | 9N171 | |
| A1CR23 | 1901-0040 | 1 | | DIODE-SWITCHING 30V 50MA 2NS DO-35 | 9N171 | |
| A1CR24 | 1902-0064 | 1 | | DIODE-ZNR 7.5V 5% DO-35 PD=.4W TC=+.05% | 04713 | |
| A1CR25 | 1902-0064 | 1 | | DIODE-ZNR 7.5V 5% DO-35 PD=.4W TC=+.05% | 04713 | |
| A1CR26 | 1902-0064 | 1 | | DIODE-ZNR 7.5V 5% DO-35 PD=.4W TC=+.05% | 04713 | |
| A1CR27 | 1901-0040 | 1 | | DIODE-SWITCHING 30V 50MA 2NS DO-35 | 9N171 | |
| A1CR28 | 1901-0040 | 1 | | DIODE-SWITCHING 30V 50MA 2NS DO-35 | 9N171 | |
| A1CR29 | 1902-0057 | 2 | 1 | DIODE-ZNR 6.49V 5% DO-35 PD=.4W | 04713 | |
| A1CR30 | 1990-1123 | 0 | 1 | OPT LED LMP R AP LMP1301 TT1H | 28480 | 1990-1123 |
| A1CR31 | 1902-3190 | 0 | 2 | DIODE-ZNR 13V 5% DO-35 PD=.4W TC=+.06% | 04713 | |
| A1CR32 | 1902-3190 | 0 | | DIODE-ZNR 13V 5% DO-35 PD=.4W TC=+.06% | 04713 | |
| A1CR33 | 1901-0662 | 3 | 2 | DIODE-PWR RECT 100V 6A | 04713 | |
| A1CR34 | 1901-0662 | 3 | | DIODE-PWR RECT 100V 6A | 04713 | |
| A1CR35 | 1901-0050 | 3 | | DIODE-SWITCHING 80V 200MA 2NS DO-35 | 9N171 | |
| A1CR36 | 1901-0050 | 3 | | DIODE-SWITCHING 80V 200MA 2NS DO-35 | 9N171 | |
| | | | | | 20940 | 106 |
| | | | | | 20940 | 106 |
| | | | | | 20940 | 106 |
| | | | | | 20940 | 106 |
| | | | | | 20940 | 106 |
| | | | | | 20940 | 106 |
| A1H1 | 03585-21208 | 2 | 1 | MCHD BAR-CONN MTG | 28480 | |
| A1H2 | 0360-0124 | 3 | 8 | CONNECTOR-SGL CONT PIN .04-IN-BSC-SZ RND97300 | 97300 | |
| A1H3 | 0360-0124 | 3 | | CONNECTOR-SGL CONT PIN .04-IN-BSC-SZ RND97300 | 97300 | |
| A1H4 | 0360-0124 | 3 | | CONNECTOR-SGL CONT PIN .04-IN-BSC-SZ RND97300 | 97300 | |
| A1H5 | 0360-0124 | 3 | | CONNECTOR-SGL CONT PIN .04-IN-BSC-SZ RND97300 | 97300 | |
| A1H6 | 0360-0124 | 3 | | CONNECTOR-SGL CONT PIN .04-IN-BSC-SZ RND97300 | 97300 | |
| A1H7 | 0360-0124 | 3 | | CONNECTOR-SGL CONT PIN .04-IN-BSC-SZ RND97300 | 97300 | |
| A1H8 | 0360-0124 | 3 | | CONNECTOR-SGL CONT PIN .04-IN-BSC-SZ RND97300 | 97300 | |

See introduction to this section for ordering information
* Indicates one of several possible values installed

# Table 9-3. Replaceable Parts

| Reference Designation | HP Part Number | C D | Qty. | Description | Mfr. Code | Mfr. Part Number |
|---|---|---|---|---|---|---|
| A1H9 | 0360-0124 | 3 | | CONNECTOR-SGL CONT PIN .04-IN-BSC-SZ RND97300 | 97300 | |
| A1H10 | 0360-1917 | 4 | 1 | TERMINAL-STUD SPCL-FDTHRU PRESS-MTG | 98291 | 011-6812-00-0-206 |
| A1H11 | 0520-0133 | 4 | 2 | SCREW-MACH 2-56 .5-IN-LG PAN-HD-POZI | 83486 | |
| A1H12 | 0520-0133 | 4 | | SCREW-MACH 2-56 .5-IN-LG PAN-HD-POZI | 83486 | |
| A1H18 | 2190-0014 | 1 | 2 | WASHER-LK INTL T NO. 2 .089-IN-ID | 73734 | |
| A1H19 | 2190-0014 | 1 | | WASHER-LK INTL T NO. 2 .089-IN-ID | 73734 | |
| A1H44 | 7175-0057 | 5 | 1 | RESISTOR-ZERO OHMS SOLID TINNED COPPER | 62223 | |
| A1H45 | 9170-0894 | 0 | 4 | CORE-SHIELDING BEAD | 02114 | 56-590-65/4A6 |
| A1H46 | 9170-0894 | 0 | | CORE-SHIELDING BEAD | 02114 | 56-590-65/4A6 |
| A1H47 | 9170-0894 | 0 | | CORE-SHIELDING BEAD | 02114 | 56-590-65/4A6 |
| A1H48 | 8150-4776 | 2 | 1 | WIRE 22AWG W TFE 1X22 105C | 28480 | J0.200X0.125T22 |
| A1H48 | 9170-0894 | 0 | | CORE-SHIELDING BEAD | 02114 | 56-590-65/4A6 |
| A1H49 | 9170-0894 | 0 | | CORE-SHIELDING BEAD | 02114 | 56-590-65/4A6 |
| A1J1 | 1250-1596 | 3 | 1 | CONNECTOR-RF BNC FEM SGL-HOLE-RR | 24931 | 28JR301-1 |
| A1J2 | 03585-61666 | 0 | 1 | CBL-ASM CXL FBNC/MSM 140MM ML | 28480 | |
| A1J3 | 1250-1810 | 4 | 1 | CONNECTOR-RF SMB M PC 50-OHM | 98291 | 51-353-0049 |
| A1J4 | 1251-1636 | 4 | 3 | CONNECTOR-SGL CONT SKT .04-IN-BSC-SZ RND06776 | 06776 | PS-40-832-TG30 |
| A1J5 | 1251-1636 | 4 | | CONNECTOR-SGL CONT SKT .04-IN-BSC-SZ RND06776 | 06776 | PS-40-832-TG30 |
| A1J6 | 1200-0474 | 9 | 1 | SOCKET-IC 14-CONT DIP-SLDR | 06776 | ICU-143-S6A-TG |
| A1J7 | 1251-1636 | 4 | | CONNECTOR-SGL CONT SKT .04-IN-BSC-SZ RND06776 | 06776 | PS-40-832-TG30 |
| A1K1* | 0490-0670 | 9 | 0 | RELAY 2C 5VDC-COIL 1A 28VDC | 11532 | 732-5 |
| A1K1* | 0490-1300 | 4 | 0 | RELAY 2C 9VDC-COIL .5A 28VDC | 11532 | 712-9 |
| A1K1* | 0490-1319 | 5 | 0 | RELAY 2C 12VDC-COIL .5A 28VDC | 11532 | 412M-6980 |
| A1K1* | 0490-1318 | 4 | 13 | RELAY 2C 12VDC-COIL .5A 28VDC | 11532 | 412YM-0060 |
| A1K2* | 0490-0670 | 9 | | RELAY 2C 5VDC-COIL 1A 28VDC | 11532 | 732-5 |
| A1K2* | 0490-1300 | 4 | | RELAY 2C 9VDC-COIL .5A 28VDC | 11532 | 712-9 |
| A1K2* | 0490-1319 | 5 | | RELAY 2C 12VDC-COIL .5A 28VDC | 11532 | 412M-6980 |
| A1K2* | 0490-1318 | 4 | | RELAY 2C 12VDC-COIL .5A 28VDC | 11532 | 412YM-0060 |
| A1K3* | 0490-0670 | 9 | | RELAY 2C 5VDC-COIL 1A 28VDC | 11532 | 732-5 |
| A1K3* | 0490-1300 | 4 | | RELAY 2C 9VDC-COIL .5A 28VDC | 11532 | 712-9 |
| A1K3* | 0490-1319 | 5 | | RELAY 2C 12VDC-COIL .5A 28VDC | 11532 | 412M-6980 |
| A1K3* | 0490-1318 | 4 | | RELAY 2C 12VDC-COIL .5A 28VDC | 11532 | 412YM-0060 |
| A1K4* | 0490-0670 | 9 | | RELAY 2C 5VDC-COIL 1A 28VDC | 11532 | 732-5 |
| A1K4* | 0490-1300 | 4 | | RELAY 2C 9VDC-COIL .5A 28VDC | 11532 | 712-9 |
| A1K4* | 0490-1319 | 5 | | RELAY 2C 12VDC-COIL .5A 28VDC | 11532 | 412M-6980 |
| A1K4* | 0490-1318 | 4 | | RELAY 2C 12VDC-COIL .5A 28VDC | 11532 | 412YM-0060 |
| A1K5* | 0490-0670 | 9 | | RELAY 2C 5VDC-COIL 1A 28VDC | 11532 | 732-5 |
| A1K5* | 0490-1300 | 4 | | RELAY 2C 9VDC-COIL .5A 28VDC | 11532 | 712-9 |
| A1K5* | 0490-1319 | 5 | | RELAY 2C 12VDC-COIL .5A 28VDC | 11532 | 412M-6980 |
| A1K5* | 0490-1318 | 4 | | RELAY 2C 12VDC-COIL .5A 28VDC | 11532 | 412YM-0060 |
| A1K6* | 0490-0670 | 9 | | RELAY 2C 5VDC-COIL 1A 28VDC | 11532 | 732-5 |
| A1K6* | 0490-1300 | 4 | | RELAY 2C 9VDC-COIL .5A 28VDC | 11532 | 712-9 |
| A1K6* | 0490-1319 | 5 | | RELAY 2C 12VDC-COIL .5A 28VDC | 11532 | 412M-6980 |
| A1K6* | 0490-1318 | 4 | | RELAY 2C 12VDC-COIL .5A 28VDC | 11532 | 412YM-0060 |
| A1K7* | 0490-0670 | 9 | | RELAY 2C 5VDC-COIL 1A 28VDC | 11532 | 732-5 |
| A1K7* | 0490-1300 | 4 | | RELAY 2C 9VDC-COIL .5A 28VDC | 11532 | 712-9 |
| A1K7* | 0490-1319 | 5 | | RELAY 2C 12VDC-COIL .5A 28VDC | 11532 | 412M-6980 |
| A1K7* | 0490-1318 | 4 | | RELAY 2C 12VDC-COIL .5A 28VDC | 11532 | 412YM-0060 |
| A1K8* | 0490-0670 | 9 | | RELAY 2C 5VDC-COIL 1A 28VDC | 11532 | 732-5 |
| A1K8* | 0490-1300 | 4 | | RELAY 2C 9VDC-COIL .5A 28VDC | 11532 | 712-9 |
| A1K8* | 0490-1319 | 5 | | RELAY 2C 12VDC-COIL .5A 28VDC | 11532 | 412M-6980 |
| A1K8* | 0490-1318 | 4 | | RELAY 2C 12VDC-COIL .5A 28VDC | 11532 | 412YM-0060 |
| A1K9* | 0490-0670 | 9 | | RELAY 2C 5VDC-COIL 1A 28VDC | 11532 | 732-5 |
| A1K9* | 0490-1300 | 4 | | RELAY 2C 9VDC-COIL .5A 28VDC | 11532 | 712-9 |
| A1K9* | 0490-1319 | 5 | | RELAY 2C 12VDC-COIL .5A 28VDC | 11532 | 412M-6980 |
| A1K9* | 0490-1318 | 4 | | RELAY 2C 12VDC-COIL .5A 28VDC | 11532 | 412YM-0060 |
| A1K11* | 0490-0670 | 9 | | RELAY 2C 5VDC-COIL 1A 28VDC | 11532 | 732-5 |
| A1K11* | 0490-1300 | 4 | | RELAY 2C 9VDC-COIL .5A 28VDC | 11532 | 712-9 |
| A1K11* | 0490-1319 | 5 | | RELAY 2C 12VDC-COIL .5A 28VDC | 11532 | 412M-6980 |
| A1K11* | 0490-1318 | 4 | | RELAY 2C 12VDC-COIL .5A 28VDC | 11532 | 412YM-0060 |
| A1K12* | 0490-0670 | 9 | | RELAY 2C 5VDC-COIL 1A 28VDC | 11532 | 732-5 |
| A1K12* | 0490-1300 | 4 | | RELAY 2C 9VDC-COIL .5A 28VDC | 11532 | 712-9 |
| A1K12* | 0490-1319 | 5 | | RELAY 2C 12VDC-COIL .5A 28VDC | 11532 | 412M-6980 |
| A1K12* | 0490-1318 | 4 | | RELAY 2C 12VDC-COIL .5A 28VDC | 11532 | 412YM-0060 |
| A1K13* | 0490-0670 | 9 | | RELAY 2C 5VDC-COIL 1A 28VDC | 11532 | 732-5 |

See introduction to this section for ordering information
* Indicates one of several possible values installed

# Table 9-3. Replaceable Parts

| Reference Designation | HP Part Number | C D | Qty. | Description | Mfr. Code | Mfr. Part Number |
|---|---|---|---|---|---|---|
| A1K13* | 0490-1300 | 4 | | RELAY 2C 9VDC-COIL .5A 28VDC | 11532 | 712-9 |
| A1K13* | 0490-1319 | 5 | | RELAY 2C 12VDC-COIL .5A 28VDC | 11532 | 412M-6980 |
| A1K13* | 0490-1318 | 4 | | RELAY 2C 12VDC-COIL .5A 28VDC | 11532 | 412YM-0060 |
| A1K14* | 0490-0670 | 9 | | RELAY 2C 5VDC-COIL 1A 28VDC | 11532 | 732-5 |
| A1K14* | 0490-1300 | 4 | | RELAY 2C 9VDC-COIL .5A 28VDC | 11532 | 712-9 |
| A1K14* | 0490-1319 | 5 | | RELAY 2C 12VDC-COIL .5A 28VDC | 11532 | 412M-6980 |
| A1K14* | 0490-1318 | 4 | | RELAY 2C 12VDC-COIL .5A 28VDC | 11532 | 412YM-0060 |
| A1L1 | 9140-0308 | 8 | 1 | INDUCTOR RF-CH-MLD 120NH 5% .166DX.385LG24226 | 24226 | 15M120J |
| A1L2 | 9100-3560 | 6 | 11 | INDUCTOR RF-CH-MLD 5.6UH 5% .166DX.385LG24226 | 24226 | 15M561J |
| A1L3 | 9140-0144 | 0 | 20 | INDUCTOR RF-CH-MLD 4.7UH 10% .105DX.26LG99800 | 99800 | 1025-36 |
| A1L4 | 9140-0144 | 0 | | INDUCTOR RF-CH-MLD 4.7UH 10% .105DX.26LG99800 | 99800 | 1025-36 |
| A1L5 | 9140-0144 | 0 | | INDUCTOR RF-CH-MLD 4.7UH 10% .105DX.26LG99800 | 99800 | 1025-36 |
| A1L6 | 9140-0144 | 0 | | INDUCTOR RF-CH-MLD 4.7UH 10% .105DX.26LG99800 | 99800 | 1025-36 |
| A1L7 | 9140-0144 | 0 | | INDUCTOR RF-CH-MLD 4.7UH 10% .105DX.26LG99800 | 99800 | 1025-36 |
| A1L8 | 9140-0144 | 0 | | INDUCTOR RF-CH-MLD 4.7UH 10% .105DX.26LG99800 | 99800 | 1025-36 |
| A1L9 | 9140-0144 | 0 | | INDUCTOR RF-CH-MLD 4.7UH 10% .105DX.26LG99800 | 99800 | 1025-36 |
| A1L11 | 9140-0144 | 0 | | INDUCTOR RF-CH-MLD 4.7UH 10% .105DX.26LG99800 | 99800 | 1025-36 |
| A1L12 | 9140-0144 | 0 | | INDUCTOR RF-CH-MLD 4.7UH 10% .105DX.26LG99800 | 99800 | 1025-36 |
| A1L13 | 9140-0144 | 0 | | INDUCTOR RF-CH-MLD 4.7UH 10% .105DX.26LG99800 | 99800 | 1025-36 |
| A1L14 | 9140-0144 | 0 | | INDUCTOR RF-CH-MLD 4.7UH 10% .105DX.26LG99800 | 99800 | 1025-36 |
| A1L15 | 9140-0144 | 0 | | INDUCTOR RF-CH-MLD 4.7UH 10% .105DX.26LG99800 | 99800 | 1025-36 |
| A1L16 | 9140-0144 | 0 | | INDUCTOR RF-CH-MLD 4.7UH 10% .105DX.26LG99800 | 99800 | 1025-36 |
| A1L18 | 9100-0685 | 0 | 1 | INDUCTOR .156DX.625LG | 24226 | 8282-4 |
| A1L19 | 9100-4041 | 0 | 2 | INDUCTOR .344D | 24226 | 8282-10 |
| A1L20 | 9100-2247 | 4 | 1 | INDUCTOR RF-CH-MLD 100NH 10% .105DX.26LG24226 | 24226 | 10M100K |
| A1L21 | 9100-4041 | 0 | | INDUCTOR .344D | 24226 | 8282-10 |
| A1L22 | 9140-0144 | 0 | | INDUCTOR RF-CH-MLD 4.7UH 10% .105DX.26LG99800 | 99800 | 1025-36 |
| A1L23 | 9140-0144 | 0 | | INDUCTOR RF-CH-MLD 4.7UH 10% .105DX.26LG99800 | 99800 | 1025-36 |
| A1L24 | 9140-0144 | 0 | | INDUCTOR RF-CH-MLD 4.7UH 10% .105DX.26LG99800 | 99800 | 1025-36 |
| A1L25 | 9140-0144 | 0 | | INDUCTOR RF-CH-MLD 4.7UH 10% .105DX.26LG99800 | 99800 | 1025-36 |
| A1L26 | 9140-0144 | 0 | | INDUCTOR RF-CH-MLD 4.7UH 10% .105DX.26LG99800 | 99800 | 1025-36 |
| A1L27 | 9140-0144 | 0 | | INDUCTOR RF-CH-MLD 4.7UH 10% .105DX.26LG99800 | 99800 | 1025-36 |
| A1L28 | 9100-3560 | 6 | | INDUCTOR RF-CH-MLD 5.6UH 5% .166DX.385LG24226 | 24226 | 15M561J |
| A1L29 | 9100-3560 | 6 | | INDUCTOR RF-CH-MLD 5.6UH 5% .166DX.385LG24226 | 24226 | 15M561J |
| A1L30 | 9140-0158 | 6 | 1 | INDUCTOR RF-CH-MLD 1UH 10% .105DX.26LG | 32159 | 1A1002M +-10% |
| A1L31 | 9100-3560 | 6 | | INDUCTOR RF-CH-MLD 5.6UH 5% .166DX.385LG24226 | 24226 | 15M561J |
| A1L32 | 9100-3560 | 6 | | INDUCTOR RF-CH-MLD 5.6UH 5% .166DX.385LG24226 | 24226 | 15M561J |
| A1L33 | 9100-3560 | 6 | | INDUCTOR RF-CH-MLD 5.6UH 5% .166DX.385LG24226 | 24226 | 15M561J |
| A1L34 | 9100-3560 | 6 | | INDUCTOR RF-CH-MLD 5.6UH 5% .166DX.385LG24226 | 24226 | 15M561J |
| A1L35 | 9100-3560 | 6 | | INDUCTOR RF-CH-MLD 5.6UH 5% .166DX.385LG24226 | 24226 | 15M561J |
| A1L36 | 9100-3560 | 6 | | INDUCTOR RF-CH-MLD 5.6UH 5% .166DX.385LG24226 | 24226 | 15M561J |
| A1L37 | 9100-3560 | 6 | | INDUCTOR RF-CH-MLD 5.6UH 5% .166DX.385LG24226 | 24226 | 15M561J |
| A1L38 | 9100-3560 | 6 | | INDUCTOR RF-CH-MLD 5.6UH 5% .166DX.385LG24226 | 24226 | 15M561J |
| A1L39 | 9140-0144 | 0 | | INDUCTOR RF-CH-MLD 4.7UH 10% .105DX.26LG99800 | 99800 | 1025-36 |
| A1L40 | 9100-2251 | 0 | 1 | INDUCTOR RF-CH-MLD 220NH 10% .105DX.26LG24226 | 24226 | 10M220K |
| A1Q1 | 1853-0066 | 8 | 6 | TRANSISTOR PNP SI TO-92 PD=625MW | 27014 | |
| A1Q2 | 1854-0071 | 7 | 3 | TRANSISTOR NPN SI PD=300MW FT=200MHZ | 13606 | |
| A1Q3 | 1854-0071 | 7 | | TRANSISTOR NPN SI PD=300MW FT=200MHZ | 13606 | |
| A1Q4 | 1853-0066 | 8 | | TRANSISTOR PNP SI TO-92 PD=625MW | 27014 | |
| A1Q5 | 1853-0066 | 8 | | TRANSISTOR PNP SI TO-92 PD=625MW | 27014 | |
| A1Q6 | 1855-0268 | 6 | 1 | TRANSISTOR J-FET N-CHAN D-MODE TO-92 SI | 17856 | |
| A1Q7 | 1854-0296 | 8 | 1 | TRANSISTOR NPN SI TO-92 PD=350W | 04713 | |
| A1Q8 | 1854-0401 | 7 | 1 | TRANSISTOR NPN SI TO-72 PD=200MW | 04713 | |
| A1Q9 | 1853-0354 | 7 | 3 | TRANSISTOR PNP SI TO-92 PD=350MW | 04713 | |
| A1Q10 | 1854-0351 | 6 | 1 | TRANSISTOR NPN SI TO-18 PD=360MW | 04713 | |
| A1Q11 | 1853-0354 | 7 | | TRANSISTOR PNP SI TO-92 PD=350MW | 04713 | |
| A1Q12 | 1854-0305 | 0 | 3 | TRANSISTOR NPN SI TO-18 PD=400MW | 04713 | |
| A1Q13 | 1854-0404 | 0 | 1 | TRANSISTOR NPN SI TO-18 PD=360MW | 04713 | |
| A1Q14 | 1854-0305 | 0 | | TRANSISTOR NPN SI TO-18 PD=400MW | 04713 | |
| A1Q15 | 1854-0247 | 9 | 1 | TRANSISTOR NPN SI TO-39 PD=1W FT=800MHZ | 04713 | |
| A1Q16 | 1854-0686 | 0 | 1 | TRANSISTOR NPN SI TO-72 PD=200MW FT=4GHZ03334P01 | 03334P01 | |
| A1Q18 | 1854-0305 | 0 | | TRANSISTOR NPN SI TO-18 PD=400MW | 04713 | |
| A1Q19 | 1853-0354 | 7 | | TRANSISTOR PNP SI TO-92 PD=350MW | 04713 | |
| A1Q20 | 1853-0066 | 8 | | TRANSISTOR PNP SI TO-92 PD=625MW | 27014 | |
| A1Q21 | 1854-0071 | 7 | | TRANSISTOR NPN SI PD=300MW FT=200MHZ | 13606 | |

See introduction to this section for ordering information
* Indicates one of several possible values installed

# Table 9-3. Replaceable Parts

| Reference Designation | HP Part Number | C D | Qty. | Description | Mfr. Code | Mfr. Part Number |
|---|---|---|---|---|---|---|
| A1Q22 | 1853-0066 | 8 | | TRANSISTOR PNP SI TO-92 PD=625MW | 27014 | |
| A1Q23 | 1853-0066 | 8 | | TRANSISTOR PNP SI TO-92 PD=625MW | 27014 | |
| A1Q24 | 1853-0051 | 1 | 1 | TRANSISTOR PNP 2N4037 SI TO-5 PD=1W | 04550P03 | |
| A1Q25 | 1854-0039 | 7 | 1 | TRANSISTOR NPN 2N3053S SI TO-39 PD=1W | 04713 | |
| A1R1 | 0760-0026 | 2 | 1 | RESISTOR 75 2% 1W MO TC=0+-200 | 28480 | RG32 |
| A1R3 | 0683-6805 | 3 | 14 | RESISTOR 68 5% .25W CF TC=0-400 | 77902 | R-25J |
| A1R4 | 0683-1025 | 9 | 13 | RESISTOR 1K 5% .25W CF TC=0-400 | 77902 | R-25J |
| A1R5 | 0683-1025 | 9 | | RESISTOR 1K 5% .25W CF TC=0-400 | 77902 | R-25J |
| A1R6 | 0683-6805 | 3 | | RESISTOR 68 5% .25W CF TC=0-400 | 77902 | R-25J |
| A1R7 | 0683-4735 | 4 | 9 | RESISTOR 47K 5% .25W CF TC=0-400 | 77902 | R-25J |
| A1R8 | 0683-4735 | 4 | | RESISTOR 47K 5% .25W CF TC=0-400 | 77902 | R-25J |
| A1R9 | 0683-6805 | 3 | | RESISTOR 68 5% .25W CF TC=0-400 | 77902 | R-25J |
| A1R10 | 0683-2225 | 3 | 10 | RESISTOR 2.2K 5% .25W CF TC=0-400 | 77902 | R-25J |
| A1R11 | 0699-2096 | 9 | 1 | R-F 115 OHM 1% 1/2W HF12 T0 | 91637 | CMF-65-63 |
| A1R12 | 0699-2085 | 6 | 1 | R-F 26.1 OH 1% 1/2W HF12 T0 | 91637 | CMF-65-63 |
| A1R13 | 0699-2086 | 7 | 1 | R-F 32.4 OH 1% 1/2W HF12 T0 | 91637 | CMF-65-63 |
| A1R14 | 0683-6805 | 3 | | RESISTOR 68 5% .25W CF TC=0-400 | 77902 | R-25J |
| A1R15 | 0757-0167 | 5 | 1 | RESISTOR 143 1% .25W F TC=0+-100 | 19701 | 5043R |
| A1R16 | 0699-1163 | 9 | 1 | RESISTOR 75 .1% 1W F TC=0+-50 | 19647 | MS210N |
| A1R17 | 0757-0410 | 1 | 2 | RESISTOR 301 1% .125W F TC=0+-100 | 19701 | SFR25H |
| A1R18 | 0683-7505 | 2 | 3 | RESISTOR 75 5% .25W CF TC=0-400 | 77902 | R-25J |
| A1R19 | 0683-6805 | 3 | | RESISTOR 68 5% .25W CF TC=0-400 | 77902 | R-25J |
| A1R20 | 0683-2225 | 3 | | RESISTOR 2.2K 5% .25W CF TC=0-400 | 77902 | R-25J |
| A1R21 | 0683-7505 | 2 | | RESISTOR 75 5% .25W CF TC=0-400 | 77902 | R-25J |
| A1R22 | 0757-0410 | 1 | | RESISTOR 301 1% .125W F TC=0+-100 | 19701 | SFR25H |
| A1R23 | 0683-7505 | 2 | | RESISTOR 75 5% .25W CF TC=0-400 | 77902 | R-25J |
| A1R24 | 0683-6805 | 3 | | RESISTOR 68 5% .25W CF TC=0-400 | 77902 | R-25J |
| A1R25 | 0683-6805 | 3 | | RESISTOR 68 5% .25W CF TC=0-400 | 77902 | R-25J |
| A1R26 | 0698-6979 | 3 | 2 | RESISTOR 111.1K .1% .125W F TC=0+-25 | 19701 | 5033R |
| A1R27 | 0698-6305 | 9 | 2 | RESISTOR 900K .1% .25W F TC=0+-25 | 19701 | 5043R |
| A1R28 | 0683-6805 | 3 | | RESISTOR 68 5% .25W CF TC=0-400 | 77902 | R-25J |
| A1R29 | 0698-6979 | 3 | | RESISTOR 111.1K .1% .125W F TC=0+-25 | 19701 | 5033R |
| A1R31 | 0698-6305 | 9 | | RESISTOR 900K .1% .25W F TC=0+-25 | 19701 | 5043R |
| A1R32 | 0683-2205 | 9 | 2 | RESISTOR 22 5% .25W CF TC=0-400 | 77902 | R-25J |
| A1R33 | 0698-3225 | 6 | 1 | RESISTOR 1.43K 1% .125W F TC=0+-100 | 19701 | SFR25H |
| A1R34 | 0683-1045 | 3 | 13 | RESISTOR 100K 5% .25W CF TC=0-400 | 77902 | R-25J |
| A1R35 | 0683-1025 | 9 | | RESISTOR 1K 5% .25W CF TC=0-400 | 77902 | R-25J |
| A1R36 | 0698-4467 | 0 | 1 | RESISTOR 1.05K 1% .125W F TC=0+-100 | 91637 | CMF-55-1, T-1 |
| A1R37 | 0698-4375 | 9 | 1 | RESISTOR 30.9 1% .125W F TC=0+-100 | 91637 | CMF-55-1, T-1 |
| A1R38 | 0698-3262 | 1 | 1 | RESISTOR 40.2 1% .125W F TC=0+-100 | 19701 | SFR25H |
| A1R39 | 2100-3296 | 8 | 2 | RESISTOR-TRMR 1K 10% C TOP-ADJ 17-TRN | 73138 | 67WR |
| A1R40 | 0698-3493 | 0 | 1 | RESISTOR 4.12K 1% .125W F TC=0+-100 | 19701 | SFR25H |
| A1R41 | 0683-1035 | 1 | 11 | RESISTOR 10K 5% .25W CF TC=0-400 | 77902 | R-25J |
| A1R42 | 0683-6825 | 7 | 5 | RESISTOR 6.8K 5% .25W CF TC=0-400 | 77902 | R-25J |
| A1R43 | 0698-4425 | 0 | 1 | RESISTOR 1.54K 1% .125W F TC=0+-100 | 91637 | CMF-55-1, T-1 |
| A1R44 | 0698-4421 | 6 | 1 | RESISTOR 249 1% .125W F TC=0+-100 | 91637 | CMF-55-1, T-1 |
| A1R45 | 0683-2245 | 7 | 2 | RESISTOR 220K 5% .25W CF TC=0-800 | 77902 | R-25J |
| A1R46 | 0683-2245 | 7 | | RESISTOR 220K 5% .25W CF TC=0-800 | 77902 | R-25J |
| A1R47 | 0683-1015 | 7 | 12 | RESISTOR 100 5% .25W CF TC=0-400 | 77902 | R-25J |
| A1R48 | 0683-1015 | 7 | | RESISTOR 100 5% .25W CF TC=0-400 | 77902 | R-25J |
| A1R49 | 0683-1015 | 7 | | RESISTOR 100 5% .25W CF TC=0-400 | 77902 | R-25J |
| A1R50 | 0698-4398 | 6 | 1 | RESISTOR 86.6 1% .125W F TC=0+-100 | 91637 | CMF-55-1, T-1 |
| A1R51 | 0683-1015 | 7 | | RESISTOR 100 5% .25W CF TC=0-400 | 77902 | R-25J |
| A1R52 | 2100-3345 | 8 | 1 | RESISTOR-TRMR 10 10% C TOP-ADJ 1-TRN | 32997 | 3386P-Y46-100 |
| A1R53 | 0683-1025 | 9 | | RESISTOR 1K 5% .25W CF TC=0-400 | 77902 | R-25J |
| A1R54 | 0683-1025 | 9 | | RESISTOR 1K 5% .25W CF TC=0-400 | 77902 | R-25J |
| A1R55 | 0683-1025 | 9 | | RESISTOR 1K 5% .25W CF TC=0-400 | 77902 | R-25J |
| A1R56 | 0683-1025 | 9 | | RESISTOR 1K 5% .25W CF TC=0-400 | 77902 | R-25J |
| A1R57 | 0698-4456 | 7 | 1 | RESISTOR 549 1% .125W F TC=0+-100 | 91637 | CMF-55-1, T-1 |
| A1R58 | 0683-6825 | 7 | | RESISTOR 6.8K 5% .25W CF TC=0-400 | 77902 | R-25J |
| A1R59 | 0683-1025 | 9 | | RESISTOR 1K 5% .25W CF TC=0-400 | 77902 | R-25J |
| A1R60 | 0698-4407 | 8 | 4 | RESISTOR 118 1% .125W F TC=0+-100 | 91637 | CMF-55-1, T-1 |
| A1R61 | 0683-6825 | 7 | | RESISTOR 6.8K 5% .25W CF TC=0-400 | 77902 | R-25J |
| A1R62 | 0683-1015 | 7 | | RESISTOR 100 5% .25W CF TC=0-400 | 77902 | R-25J |
| A1R63 | 0683-4705 | 8 | 7 | RESISTOR 47 5% .25W CF TC=0-400 | 77902 | R-25J |

See introduction to this section for ordering information
* Indicates one of several possible values installed

# Table 9-3. Replaceable Parts

| Reference Designation | HP Part Number | C D | Qty. | Description | Mfr. Code | Mfr. Part Number |
|---|---|---|---|---|---|---|
| A1R64 | 0683-1035 | 1 | | RESISTOR 10K 5% .25W CF TC=0-400 | 77902 | R-25J |
| A1R65 | 0683-4705 | 8 | | RESISTOR 47 5% .25W CF TC=0-400 | 77902 | R-25J |
| A1R66 | 0683-1015 | 7 | | RESISTOR 100 5% .25W CF TC=0-400 | 77902 | R-25J |
| A1R67 | 0683-1035 | 1 | | RESISTOR 10K 5% .25W CF TC=0-400 | 77902 | R-25J |
| A1R68 | 0683-1035 | 1 | | RESISTOR 10K 5% .25W CF TC=0-400 | 77902 | R-25J |
| A1R69 | 0683-4735 | 4 | | RESISTOR 47K 5% .25W CF TC=0-400 | 77902 | R-25J |
| A1R71 | 0683-4735 | 4 | | RESISTOR 47K 5% .25W CF TC=0-400 | 77902 | R-25J |
| A1R72 | 0683-5105 | 4 | 1 | RESISTOR 51 5% .25W CF TC=0-400 | 77902 | R-25J |
| A1R73 | 0683-4735 | 4 | | RESISTOR 47K 5% .25W CF TC=0-400 | 77902 | R-25J |
| A1R74 | 0683-1045 | 3 | | RESISTOR 100K 5% .25W CF TC=0-400 | 77902 | R-25J |
| A1R75 | 0683-4735 | 4 | | RESISTOR 47K 5% .25W CF TC=0-400 | 77902 | R-25J |
| A1R76 | 0683-1035 | 1 | | RESISTOR 10K 5% .25W CF TC=0-400 | 77902 | R-25J |
| A1R78 | 0698-6369 | 5 | 1 | RESISTOR 1M .1% .25W F TC=0+-25 | 19701 | 5043R |
| A1R81 | 0683-5115 | 6 | 1 | RESISTOR 510 5% .25W CF TC=0-400 | 77902 | R-25J |
| A1R82 | 0683-4705 | 8 | | RESISTOR 47 5% .25W CF TC=0-400 | 77902 | R-25J |
| A1R83 | 0683-4725 | 2 | 4 | RESISTOR 4.7K 5% .25W CF TC=0-400 | 77902 | R-25J |
| A1R84 | 0683-4725 | 2 | | RESISTOR 4.7K 5% .25W CF TC=0-400 | 77902 | R-25J |
| A1R85 | 0683-1035 | 1 | | RESISTOR 10K 5% .25W CF TC=0-400 | 77902 | R-25J |
| A1R86 | 0698-4442 | 1 | 1 | RESISTOR 4.42K 1% .125W F TC=0+-100 | 91637 | CMF-55-1, T-1 |
| A1R87 | 0698-4407 | 8 | | RESISTOR 118 1% .125W F TC=0+-100 | 91637 | CMF-55-1, T-1 |
| A1R88 | 0698-4407 | 8 | | RESISTOR 118 1% .125W F TC=0+-100 | 91637 | CMF-55-1, T-1 |
| A1R89 | 0683-9135 | 8 | 2 | RESISTOR 91K 5% .25W CF TC=0-400 | 77902 | R-25J |
| A1R91 | 0683-9135 | 8 | | RESISTOR 91K 5% .25W CF TC=0-400 | 77902 | R-25J |
| A1R92 | 0757-0393 | 9 | 1 | RESISTOR 47.5 1% .125W F TC=0+-100 | 19701 | SFR25H |
| A1R93 | 0698-4411 | 4 | 1 | RESISTOR 140 1% .125W F TC=0+-100 | 91637 | CMF-55-1, T-1 |
| A1R94 | 0683-6805 | 3 | | RESISTOR 68 5% .25W CF TC=0-400 | 77902 | R-25J |
| A1R95 | 0698-3437 | 2 | 1 | RESISTOR 133 1% .125W F TC=0+-100 | 19701 | SFR25H |
| A1R96 | 0698-4399 | 7 | 1 | RESISTOR 88.7 1% .125W F TC=0+-100 | 91637 | CMF-55-1, T-1 |
| A1R97 | 0683-6805 | 3 | | RESISTOR 68 5% .25W CF TC=0-400 | 77902 | R-25J |
| A1R98 | 0698-4561 | 5 | 1 | RESISTOR 118 1% .25W F TC=0+-100 | 91637 | CMF-60-1, T-1 |
| A1R99 | 0698-4149 | 5 | 1 | RESISTOR 86.6 1% .25W F TC=0+-100 | 19701 | 5043R |
| A1R101 | 0698-4407 | 8 | | RESISTOR 118 1% .125W F TC=0+-100 | 91637 | CMF-55-1, T-1 |
| A1R102 | 0683-6805 | 3 | | RESISTOR 68 5% .25W CF TC=0-400 | 77902 | R-25J |
| A1R103 | 0757-0282 | 5 | 2 | RESISTOR 221 1% .125W F TC=0+-100 | 19701 | SFR25H |
| A1R104 | 0698-4377 | 1 | 1 | RESISTOR 37.4 1% .125W F TC=0+-100 | 91637 | CMF-55-1, T-1 |
| A1R105 | 0757-0282 | 5 | | RESISTOR 221 1% .125W F TC=0+-100 | 19701 | SFR25H |
| A1R106 | 0683-6805 | 3 | | RESISTOR 68 5% .25W CF TC=0-400 | 77902 | R-25J |
| A1R107 | 0698-4546 | 6 | 1 | RESISTOR 63.4 1% .25W F TC=0+-100 | 91637 | CMF-60-1, T-1 |
| A1R108 | 2100-3288 | 8 | 1 | RESISTOR-TRMR 50 20% C TOP-ADJ 17-TRN | 73138 | 67WR |
| A1R109 | 0698-4415 | 8 | 1 | RESISTOR 165 1% .125W F TC=0+-100 | 91637 | CMF-55-1, T-1 |
| A1R110 | 2100-3210 | 6 | 1 | RESISTOR-TRMR 10K 10% C TOP-ADJ 1-TRN | 32997 | 33B6P-Y46-103 |
| A1R111 | 0683-6805 | 3 | | RESISTOR 68 5% .25W CF TC=0-400 | 77902 | R-25J |
| A1R112 | 0686-4705 | 4 | 1 | RESISTOR 47 5% .5W CC TC=0+412 | 01121 | EB4705 |
| A1R114 | 0683-1035 | 1 | | RESISTOR 10K 5% .25W CF TC=0-400 | 77902 | R-25J |
| A1R115 | 0698-4453 | 4 | 2 | RESISTOR 402 1% .125W F TC=0+-100 | 91637 | CMF-55-1, T-1 |
| A1R116 | 0683-1035 | 1 | | RESISTOR 10K 5% .25W CF TC=0-400 | 77902 | R-25J |
| A1R117 | 0698-0085 | 0 | 1 | RESISTOR 2.61K 1% .125W F TC=0+-100 | 19701 | SFR25H |
| A1R118 | 0757-0407 | 6 | 2 | RESISTOR 200 1% .125W F TC=0+-100 | 19701 | SFR25H |
| A1R119 | 0757-0407 | 6 | | RESISTOR 200 1% .125W F TC=0+-100 | 19701 | SFR25H |
| A1R120 | 0683-6805 | 3 | | RESISTOR 68 5% .25W CF TC=0-400 | 77902 | R-25J |
| A1R121 | 0683-4705 | 8 | | RESISTOR 47 5% .25W CF TC=0-400 | 77902 | R-25J |
| A1R122 | 0683-2225 | 3 | | RESISTOR 2.2K 5% .25W CF TC=0-400 | 77902 | R-25J |
| A1R123 | 0683-2715 | 6 | 1 | RESISTOR 270 5% .25W CF TC=0-400 | 77902 | R-25J |
| A1R124 | 0683-1025 | 9 | | RESISTOR 1K 5% .25W CF TC=0-400 | 77902 | R-25J |
| A1R125 | 0698-4453 | 4 | | RESISTOR 402 1% .125W F TC=0+-100 | 91637 | CMF-55-1, T-1 |
| A1R126 | 0683-4705 | 8 | | RESISTOR 47 5% .25W CF TC=0-400 | 77902 | R-25J |
| A1R127 | 0683-1035 | 1 | | RESISTOR 10K 5% .25W CF TC=0-400 | 77902 | R-25J |
| A1R128 | 0683-1015 | 7 | | RESISTOR 100 5% .25W CF TC=0-400 | 77902 | R-25J |
| A1R129 | 0687-3311 | 8 | 1 | RESISTOR 330 10% .5W CC TC=0+529 | 01121 | EB3311 |
| A1R130 | 0683-2215 | 1 | 3 | RESISTOR 220 5% .25W CF TC=0-400 | 77902 | R-25J |
| A1R131 | 2100-3296 | 8 | | RESISTOR-TRMR 1K 10% C TOP-ADJ 17-TRN | 73138 | 67WR |
| A1R132 | 0698-4414 | 7 | 1 | RESISTOR 158 1% .125W F TC=0+-100 | 91637 | CMF-55-1, T-1 |
| A1R133 | 0698-4121 | 3 | 1 | RESISTOR 11.3K 1% .125W F TC=0+-100 | 19701 | SFR25H |
| A1R134 | 0683-0275 | 9 | 1 | RESISTOR 2.7 5% .25W CF TC=0-400 | 77902 | R-25J |
| A1R135 | 0698-3558 | 8 | 1 | RESISTOR 4.02K 1% .125W F TC=0+-100 | 19701 | SFR25H |

See introduction to this section for ordering information
* Indicates one of several possible values installed

## Table 9-3. Replaceable Parts

| Reference Designation | HP Part Number | C D | Qty. | Description | Mfr. Code | Mfr. Part Number |
|---|---|---|---|---|---|---|
| A1R136 | 0683-0335 | 2 | 2 | RESISTOR 3.3 5% .25W CF TC=0-400 | 77902 | R-25J |
| A1R137 | 0698-4499 | 8 | 1 | RESISTOR 54.9K 1% .125W F TC=0+-100 | 91637 | CMF-55-1, T-1 |
| A1R138 | 0757-0434 | 9 | 1 | RESISTOR 3.65K 1% .125W F TC=0+-100 | 19701 | SFR25H |
| A1R139 | 0683-0335 | 2 | | RESISTOR 3.3 5% .25W CF TC=0-400 | 77902 | R-25J |
| A1R140 | 0683-1225 | 1 | 1 | RESISTOR 1.2K 5% .25W CF TC=0-400 | 77902 | R-25J |
| A1R141 | 0683-1015 | 7 | | RESISTOR 100 5% .25W CF TC=0-400 | 77902 | R-25J |
| A1R142 | 0683-2205 | 9 | | RESISTOR 22 5% .25W CF TC=0-400 | 77902 | R-25J |
| A1R143 | 0757-0401 | 0 | 2 | RESISTOR 100 1% .125W F TC=0+-100 | 19701 | SFR25H |
| A1R144 | 0757-0401 | 0 | | RESISTOR 100 1% .125W F TC=0+-100 | 19701 | SFR25H |
| A1R145 | 0683-1045 | 3 | | RESISTOR 100K 5% .25W CF TC=0-400 | 77902 | R-25J |
| A1R146 | 0683-4725 | 2 | | RESISTOR 4.7K 5% .25W CF TC=0-400 | 77902 | R-25J |
| A1R147 | 0698-3496 | 3 | 1 | RESISTOR 3.57K 1% .125W F TC=0+-100 | 19701 | SFR25H |
| A1R148 | 0683-3005 | 9 | 1 | RESISTOR 30 5% .25W CF TC=0-400 | 77902 | R-25J |
| A1R149 | 0683-1025 | 9 | | RESISTOR 1K 5% .25W CF TC=0-400 | 77902 | R-25J |
| A1R150 | 0683-1005 | 5 | 1 | RESISTOR 10 5% .25W CF TC=0-400 | 77902 | R-25J |
| A1R151 | 0683-1015 | 7 | | RESISTOR 100 5% .25W CF TC=0-400 | 77902 | R-25J |
| A1R152 | 0683-1015 | 7 | | RESISTOR 100 5% .25W CF TC=0-400 | 77902 | R-25J |
| A1R153 | 0757-0280 | 3 | 1 | RESISTOR 1K 1% .125W F TC=0+-100 | 19701 | SFR25H |
| A1R154 | 0683-1035 | 1 | | RESISTOR 10K 5% .25W CF TC=0-400 | 77902 | R-25J |
| A1R155 | 0683-2045 | 5 | 1 | RESISTOR 200K 5% .25W CF TC=0-800 | 77902 | R-25J |
| A1R156 | 0683-4705 | 8 | | RESISTOR 47 5% .25W CF TC=0-400 | 77902 | R-25J |
| A1R157 | 0683-0365 | 8 | 1 | RESISTOR 3.6 5% .25W CF TC=0-400 | 77902 | R-25J |
| A1R158 | 0683-6825 | 7 | | RESISTOR 6.8K 5% .25W CF TC=0-400 | 77902 | R-25J |
| A1R159 | 0683-2035 | 3 | 4 | RESISTOR 20K 5% .25W CF TC=0-400 | 77902 | R-25J |
| A1R160 | 0683-4725 | 2 | | RESISTOR 4.7K 5% .25W CF TC=0-400 | 77902 | R-25J |
| A1R161 | 0683-2035 | 3 | | RESISTOR 20K 5% .25W CF TC=0-400 | 77902 | R-25J |
| A1R162 | 0683-1045 | 3 | | RESISTOR 100K 5% .25W CF TC=0-400 | 77902 | R-25J |
| A1R163 | 0683-4705 | 8 | | RESISTOR 47 5% .25W CF TC=0-400 | 77902 | R-25J |
| A1R164 | 0683-6825 | 7 | | RESISTOR 6.8K 5% .25W CF TC=0-400 | 77902 | R-25J |
| A1R165 | 0683-4745 | 6 | 1 | RESISTOR 470K 5% .25W CF TC=0-800 | 77902 | R-25J |
| A1R166 | 0683-2035 | 3 | | RESISTOR 20K 5% .25W CF TC=0-400 | 77902 | R-25J |
| A1R167 | 0683-1045 | 3 | | RESISTOR 100K 5% .25W CF TC=0-400 | 77902 | R-25J |
| A1R168 | 0683-3945 | 6 | 2 | RESISTOR 390K 5% .25W CF TC=0-800 | 77902 | R-25J |
| A1R169 | 0683-3945 | 6 | | RESISTOR 390K 5% .25W CF TC=0-800 | 77902 | R-25J |
| A1R170 | 2100-0558 | 9 | 1 | RESISTOR-TRMR 20K 10% C TOP-ADJ 1-TRN | 32997 | 3386P-Y46-203 |
| A1R171 | 0683-2035 | 3 | | RESISTOR 20K 5% .25W CF TC=0-400 | 77902 | R-25J |
| A1R172 | 0757-0457 | 6 | 1 | RESISTOR 47.5K 1% .125W F TC=0+-100 | 19701 | SFR25H |
| A1R173 | 2100-3286 | 6 | 2 | RESISTOR-TRMR 10K 10% C TOP-ADJ 17-TRN | 73138 | 67WR |
| A1R174 | 2100-3286 | 6 | | RESISTOR-TRMR 10K 10% C TOP-ADJ 17-TRN | 73138 | 67WR |
| A1R175 | 0683-1025 | 9 | | RESISTOR 1K 5% .25W CF TC=0-400 | 77902 | R-25J |
| A1R176 | 0683-1025 | 9 | | RESISTOR 1K 5% .25W CF TC=0-400 | 77902 | R-25J |
| A1R177 | 0683-1045 | 3 | | RESISTOR 100K 5% .25W CF TC=0-400 | 77902 | R-25J |
| A1R178 | 0683-1035 | 1 | | RESISTOR 10K 5% .25W CF TC=0-400 | 77902 | R-25J |
| A1R179 | 0683-2025 | 1 | 1 | RESISTOR 2K 5% .25W CF TC=0-400 | 77902 | R-25J |
| A1R180 | 0683-5125 | 8 | 1 | RESISTOR 5.1K 5% .25W CF TC=0-400 | 77902 | R-25J |
| A1R181 | 0683-1045 | 3 | | RESISTOR 100K 5% .25W CF TC=0-400 | 77902 | R-25J |
| A1R182 | 0683-1045 | 3 | | RESISTOR 100K 5% .25W CF TC=0-400 | 77902 | R-25J |
| A1R183 | 0683-1045 | 3 | | RESISTOR 100K 5% .25W CF TC=0-400 | 77902 | R-25J |
| A1R184 | 0683-1045 | 3 | | RESISTOR 100K 5% .25W CF TC=0-400 | 77902 | R-25J |
| A1R185 | 0683-1045 | 3 | | RESISTOR 100K 5% .25W CF TC=0-400 | 77902 | R-25J |
| A1R186 | 0683-1045 | 3 | | RESISTOR 100K 5% .25W CF TC=0-400 | 77902 | R-25J |
| A1R187 | 0683-1045 | 3 | | RESISTOR 100K 5% .25W CF TC=0-400 | 77902 | R-25J |
| A1R188 | 0683-1015 | 7 | | RESISTOR 100 5% .25W CF TC=0-400 | 77902 | R-25J |
| A1R189 | 0683-2215 | 1 | | RESISTOR 220 5% .25W CF TC=0-400 | 77902 | R-25J |
| A1R190 | 0683-1025 | 9 | | RESISTOR 1K 5% .25W CF TC=0-400 | 77902 | R-25J |
| A1R191 | 0683-1015 | 7 | | RESISTOR 100 5% .25W CF TC=0-400 | 77902 | R-25J |
| A1R192 | 0683-2215 | 1 | | RESISTOR 220 5% .25W CF TC=0-400 | 77902 | R-25J |
| A1R193 | 0683-2225 | 3 | | RESISTOR 2.2K 5% .25W CF TC=0-400 | 77902 | R-25J |
| A1R194 | 0683-2225 | 3 | | RESISTOR 2.2K 5% .25W CF TC=0-400 | 77902 | R-25J |
| A1R195 | 0683-2225 | 3 | | RESISTOR 2.2K 5% .25W CF TC=0-400 | 77902 | R-25J |
| A1R196 | 0683-2225 | 3 | | RESISTOR 2.2K 5% .25W CF TC=0-400 | 77902 | R-25J |
| A1R197 | 0683-2225 | 3 | | RESISTOR 2.2K 5% .25W CF TC=0-400 | 77902 | R-25J |
| A1R198 | 0683-2225 | 3 | | RESISTOR 2.2K 5% .25W CF TC=0-400 | 77902 | R-25J |
| A1R199 | 0683-2225 | 3 | | RESISTOR 2.2K 5% .25W CF TC=0-400 | 77902 | R-25J |
| A1R201 | 0683-4735 | 4 | | RESISTOR 47K 5% .25W CF TC=0-400 | 77902 | R-25J |

See introduction to this section for ordering information
* Indicates one of several possible values installed

# Table 9-3. Replaceable Parts

| Reference Designation | HP Part Number | C D | Qty. | Description | Mfr. Code | Mfr. Part Number |
|---|---|---|---|---|---|---|
| A1R202 | 0683-4735 | 4 | | RESISTOR 47K 5% .25W CF TC=0-400 | 77902 | R-25J |
| A1R203 | 0683-4735 | 4 | | RESISTOR 47K 5% .25W CF TC=0-400 | 77902 | R-25J |
| A1R204 | 0683-1065 | 7 | 2 | RESISTOR 10M 5% .25W CC TC=-900/+1100 | 01121 | CB1065 |
| A1R205 | 0683-1065 | 7 | | RESISTOR 10M 5% .25W CC TC=-900/+1100 | 01121 | CB1065 |
| A1T1 | 9100-1393 | 9 | 1 | XFC TOROID RF | 91637 | ITP-1029-3 |
| A1T2 | 08552-6024 | 9 | 1 | XFC TOROID BAL | 28480 | 08552-6024 |
| A1TP1 | 1251-0600 | 0 | 4 | CONNECTOR-SGL CONT PIN 1.14-MM-BSC-SZ SQ27264 | 27264 | 16-06-0034 |
| A1TP2 | 1251-0600 | 0 | | CONNECTOR-SGL CONT PIN 1.14-MM-BSC-SZ SQ27264 | 27264 | 16-06-0034 |
| A1TP3 | 1251-2501 | 4 | 1 | CONNECTOR-SGL CONT SKT .022-IN-BSC-SZ | 00779 | 50462-8 |
| A1TP4 | 1251-0600 | 0 | | CONNECTOR-SGL CONT PIN 1.14-MM-BSC-SZ SQ27264 | 27264 | 16-06-0034 |
| A1TP5 | 1251-0600 | 0 | | CONNECTOR-SGL CONT PIN 1.14-MM-BSC-SZ SQ27264 | 27264 | 16-06-0034 |
| A1U1 | 1858-0004 | 4 | 2 | TRANSISTOR ARRAY 12-PIN MET TO-101 | 04550P03 | |
| A1U2 | 1826-0043 | 4 | 3 | IC OP AMP GP TO-99 PKG | 27014 | |
| A1U3 | 1858-0004 | 4 | | TRANSISTOR ARRAY 12-PIN MET TO-101 | 04550P03 | |
| A1U4 | 1826-0043 | 4 | | IC OP AMP GP TO-99 PKG | 27014 | |
| A1U5 | 1826-0043 | 4 | | IC OP AMP GP TO-99 PKG | 27014 | |
| A1U6 | 1826-0035 | 4 | 1 | IC OP AMP LOW-DRIFT TO-99 PKG | 27014 | |
| A1U7 | 1820-0270 | 7 | 1 | IC WIDEBAND AMPL VID TO-100 PKG | 28480 | 1820-0270 |
| A1U8 | 1826-0111 | 7 | 1 | IC OP AMP GP DUAL TO-99 PKG | 04713 | |
| A1U9 | 1858-0047 | 5 | 2 | TRANSISTOR ARRAY 16-PIN PLSTC DIP | 13606 | |
| A1U10 | 1858-0047 | 5 | | TRANSISTOR ARRAY 16-PIN PLSTC DIP | 13606 | |
| A1U11 | 1820-0946 | 4 | 3 | IC GATE CMOS NOR QUAD 2-INP | 04713 | |
| A1U12 | 1820-0946 | 4 | | IC GATE CMOS NOR QUAD 2-INP | 04713 | |
| A1U13 | 1820-0946 | 4 | | IC GATE CMOS NOR QUAD 2-INP | 04713 | |
| A1U14 | 1820-1145 | 7 | 1 | IC BFR CMOS INV HEX 1-INP | 04713 | |
| A1U15 | 1990-0577 | 6 | 4 | OPTO-ISOLATOR LED-PDIO/XSTR IF=50MA-MAX | 28480 | 1990-0577 |
| A1U16 | 1990-0577 | 6 | | OPTO-ISOLATOR LED-PDIO/XSTR IF=50MA-MAX | 28480 | 1990-0577 |
| A1U17 | 1990-0577 | 6 | | OPTO-ISOLATOR LED-PDIO/XSTR IF=50MA-MAX | 28480 | 1990-0577 |
| A1U18 | 1990-0444 | 6 | 2 | OPTO-ISOLATOR LED-PDIO/XSTR IF=25MA-MAX | 28480 | 1990-0444 |
| A1U19 | 1990-0444 | 6 | | OPTO-ISOLATOR LED-PDIO/XSTR IF=25MA-MAX | 28480 | 1990-0444 |
| A1U20 | 1990-0577 | 6 | | OPTO-ISOLATOR LED-PDIO/XSTR IF=50MA-MAX | 28480 | 1990-0577 |
| A1X3 | 1251-4045 | 5 | 1 | CON-SKT GROUND | 13060 | |
| | 4330-0496 | 3 | 8 | INSULATOR-BEAD GLASS | 53101 | KG12 |
| | 8159-0005 | 0 | 6 | RESISTOR-ZERO OHMS 22 AWG LEAD DIA | 20940 | 106 |
| **A2** | **03585-66502** | **3** | **1** | **1ST MIXER PC BOARD ASSEMBLY** | **28480** | **03585-66502** |
| A2C1 | 0180-1794 | 3 | 1 | CAPACITOR-FXD 22UF+-10% 35VDC TA | 13606 | 150D226X9035R2-DYS |
| A2C8 | 0160-6505 | 2 | 2 | C-F .01UF 20% 100V CERMLr | 28480 | RPE121-978X7R103M100V |
| A2C9 | 0160-2055 | 9 | 2 | CAPACITOR-FXD .01UF +80-20% 100VDC CER | 59660 | 805-504 Y5V 103Z |
| A2C11 | 0160-2055 | 9 | | CAPACITOR-FXD .01UF +80-20% 100VDC CER | 59660 | 805-504 Y5V 103Z |
| A2C12 | 0160-6505 | 2 | | C-F .01UF 20% 100V CERMLr | 28480 | RPE121-978X7R103M100V |
| A2C13 | 0140-0077 | 9 | 1 | CAPACITOR-FDTHRU 100PF 10% 500V MICA | 12261P01 | 666-053-01A0-101K |
| A2C14 | 0160-2395 | 0 | 1 | CAPACITOR-FXD 360PF +-10% 500VDC MICA | 12261P01 | 666-053-01A0-361K |
| A2C15 | 0160-6850 | 0 | 1 | C-F 24F 5% 500V CERTBr | 59660 | 301 089 COG0 240J |
| A2C16 | 0160-2257 | 3 | 1 | CAPACITOR-FXD 10PF +-5% 500VDC CER 0+-6052763 | 52763 | |
| A2C17 | 0160-2243 | 7 | 1 | CAPACITOR-FXD 2.7PF +-.25PF 500VDC CER | 52763 | |
| A2CR1 | 1906-0211 | 8 | 0 | DIODE-ARRAY VF DIFF=20MV | 28480 | 1906-0211 |
| A2J1 | 1251-1636 | 4 | 2 | CONNECTOR-SGL CONT SKT .04-IN-BSC-SZ RND06776 | 06776 | PS-40-832-TG30 |
| A2J2 | 1250-1314 | 3 | 1 | CONNECTOR-RF SM-SLD FEM PC 50-OHM | 98291 | 52-054-0000-226 |
| A2J3 | 1251-1636 | 4 | | CONNECTOR-SGL CONT SKT .04-IN-BSC-SZ RND06776 | 06776 | PS-40-832-TG30 |
| A2J4 | 1251-4045 | 5 | 1 | CON-SKT GROUND | 13060 | |
| A2J5 | 1251-4822 | 6 | 1 | CONN-POST TYPE .100-PIN-SPCG 3-CONT | 27264 | 22-03-2031 |
| A2J5 | 1258-0141 | 8 | 1 | CON-JUMPER REM .025P | 22526 | 65474-004 |
| A2J6 | 5180-5411 | 4 | 1 | WIRE FORM-RF | 28480 | |
| A2L1 | 9100-0539 | 3 | 1 | INDUCTOR RF-CH-MLD 10UH 5% .156DX.375LG | 24226 | 15M102J |
| A2L6 | 9100-3551 | 5 | 1 | INDUCTOR RF-CH-MLD 1UH 5% .166DX.385LG | 24226 | 15M101J |
| A2L7 | 03585-67901 | 8 | 1 | IND WIREWOUND AIR 7NH | 28480 | |
| A2L8 | 03585-67902 | 9 | 1 | IND WIREWND AIR 25NH | 28480 | |
| A2L9 | 03585-67903 | 0 | 1 | IND WIREWND JUMPER | 28480 | |
| A2L11 | 9100-1379 | 1 | 1 | IND RF CHOKE VAR 6.5T | 24226 | |
| A2L12 | 9100-4041 | 0 | 1 | INDUCTOR .344D | 24226 | 8282-10 |
| A2R1 | 0683-6805 | 3 | 1 | RESISTOR 68 5% .25W CF TC=0-400 | 77902 | R-25J |
| A2R3 | 0683-2215 | 1 | 3 | RESISTOR 220 5% .25W CF TC=0-400 | 77902 | R-25J |
| A2R4 | 0683-1615 | 3 | 2 | RESISTOR 160 5% .25W CF TC=0-400 | 77902 | R-25J |
| A2R5 | 0683-4705 | 8 | 5 | RESISTOR 47 5% .25W CF TC=0-400 | 77902 | R-25J |
| A2R6 | 0683-4705 | 8 | | RESISTOR 47 5% .25W CF TC=0-400 | 77902 | R-25J |

See introduction to this section for ordering information
* Indicates one of several possible values installed

# Table 9-3. Replaceable Parts

| Reference Designation | HP Part Number | C D | Qty. | Description | Mfr. Code | Mfr. Part Number |
|---|---|---|---|---|---|---|
| A2R7 | 0683-4305 | 4 | 1 | RESISTOR 43 5% .25W CF TC=0-400 | 77902 | R-25J |
| A2R8 | 0686-1515 | 8 | 1 | RESISTOR 150 5% .5W CC TC=0+529 | 01121 | EB1515 |
| A2R9 | 0683-2215 | 1 | | RESISTOR 220 5% .25W CF TC=0-400 | 77902 | R-25J |
| A2R10 | 0683-1615 | 3 | | RESISTOR 160 5% .25W CF TC=0-400 | 77902 | R-25J |
| A2R11 | 0683-1015 | 7 | 4 | RESISTOR 100 5% .25W CF TC=0-400 | 77902 | R-25J |
| A2R12 | 0683-1015 | 7 | | RESISTOR 100 5% .25W CF TC=0-400 | 77902 | R-25J |
| A2R13 | 0683-4705 | 8 | | RESISTOR 47 5% .25W CF TC=0-400 | 77902 | R-25J |
| A2R14 | 0683-4705 | 8 | | RESISTOR 47 5% .25W CF TC=0-400 | 77902 | R-25J |
| A2R15 | 0683-4705 | 8 | | RESISTOR 47 5% .25W CF TC=0-400 | 77902 | R-25J |
| A2R16 | 0683-1015 | 7 | | RESISTOR 100 5% .25W CF TC=0-400 | 77902 | R-25J |
| A2R17 | 0683-1015 | 7 | | RESISTOR 100 5% .25W CF TC=0-400 | 77902 | R-25J |
| A2R18 | 0683-2215 | 1 | | RESISTOR 220 5% .25W CF TC=0-400 | 77902 | R-25J |
| A2SH1 | 03585-00610 | 6 | 1 | STMP SHLD-RF BECUTN | 16365 | |
| A2T1 | 08552-6044 | 1 | 1 | XFC TOROID BAL | 28480 | 08552-6044 |
| A2T2 | 9100-4038 | 5 | 1 | TRANSFORMER BEAD CORE; WITH CT PRI % SEC07797P01 | 07797P01 | 9100-4038 |
| A2T3 | 9100-4039 | 6 | 1 | TRANSFORMER-POWER | 07797P01 | 9100-4039 |
| A2T4 | 08552-6024 | 9 | 1 | XFC TOROID BAL | 28480 | 08552-6024 |
| A2U1 | 1858-0059 | 9 | 2 | TRANSISTOR ARRAY 8-PIN PLSTC DIP | 28480 | 1858-0059 |
| A2U2 | 1858-0059 | 9 | | TRANSISTOR ARRAY 8-PIN PLSTC DIP | 28480 | 1858-0059 |
| A2X4 | 1251-2501 | 4 | 1 | CONNECTOR-SGL CONT SKT .022-IN-BSC-SZ | 00779 | 50462-8 |
| | 7121-4611 | 2 | 1 | LABEL-INFORMATION .15-IN-WD .6-IN-LG | 28480 | L01003 |
| **A3** | **03585-66503** | **4** | **1** | **100.35 MHZ IF PC BD ASSEMBLY** | **28480** | **03585-66503** |
| A3C1 | 0160-6849 | 7 | 4 | C-F 22F 5% 500V CERTBr | 59660 | 301 089 COG0 220J |
| A3C2 | 0160-6850 | 0 | 3 | C-F 24F 5% 500V CERTBr | 59660 | 301 089 COG0 240J |
| A3C3 | 0160-6850 | 0 | | C-F 24F 5% 500V CERTBr | 59660 | 301 089 COG0 240J |
| A3C4 | 0160-6850 | 0 | | C-F 24F 5% 500V CERTBr | 59660 | 301 089 COG0 240J |
| A3C5 | 0160-6864 | 6 | 2 | C-F 4.7PF 5% 500V CERTBr | 59660 | 301 089 COH0 479C |
| A3C6 | 0160-6849 | 7 | | C-F 22F 5% 500V CERTBr | 59660 | 301 089 COG0 220J |
| A3C7 | 0160-6849 | 7 | | C-F 22F 5% 500V CERTBr | 59660 | 301 089 COG0 220J |
| A3C8 | 0121-0451 | 3 | 1 | CAPACITOR-V TRMR-AIR 1.7-11PF 175V | 74970 | 187-0106-028 |
| A3C9 | 0160-6849 | 7 | | C-F 22F 5% 500V CERTBr | 59660 | 301 089 COG0 220J |
| A3C10 | 0160-6864 | 6 | | C-F 4.7PF 5% 500V CERTBr | 59660 | 301 089 COH0 479C |
| A3C12 | 0160-6505 | 2 | 2 | C-F .01UF 20% 100V CERMLr | 28480 | RPE121-978X7R103M100V |
| A3C13 | 0160-6505 | 2 | | C-F .01UF 20% 100V CERMLr | 28480 | RPE121-978X7R103M100V |
| A3C14 | 0150-0029 | 2 | 1 | CAPACITOR-FXD 1PF +-10% 500VDC TI DIOX | 95121 | TYPE QC |
| A3J1 | 1251-4045 | 5 | 2 | CON-SKT GROUND | 13060 | |
| A3J2 | 1251-4045 | 5 | | CON-SKT GROUND | 13060 | |
| A3L1 | 9100-1376 | 8 | 5 | IND RF CHOKE VAR 2.5T | 24226 | |
| A3L2 | 9100-1376 | 8 | | IND RF CHOKE VAR 2.5T | 24226 | |
| A3L3 | 9100-1376 | 8 | | IND RF CHOKE VAR 2.5T | 24226 | |
| A3L4 | 9140-0263 | 4 | 1 | INDUCTOR RF-CH-MLD 240NH 5% .166DX.385LG24226 | 24226 | 15M240J |
| A3L5 | 9100-1376 | 8 | | IND RF CHOKE VAR 2.5T | 24226 | |
| A3L6 | 9100-3548 | 0 | 1 | INDUCTOR RF-CH-MLD 470NH 5% .166DX.385LG24226 | 24226 | 15M470J |
| A3L7 | 9100-1376 | 8 | | IND RF CHOKE VAR 2.5T | 24226 | |
| A3L8 | 9140-0144 | 0 | 1 | INDUCTOR RF-CH-MLD 4.7UH 10% .105DX.26LG99800 | 99800 | 1025-36 |
| A3Q1 | 1854-0305 | 0 | 2 | TRANSISTOR NPN SI TO-18 PD=400MW | 04713 | |
| A3Q2 | 1854-0305 | 0 | | TRANSISTOR NPN SI TO-18 PD=400MW | 04713 | |
| A3R1 | 0683-1035 | 1 | 2 | RESISTOR 10K 5% .25W CF TC=0-400 | 77902 | R-25J |
| A3R2 | 0683-4705 | 8 | 2 | RESISTOR 47 5% .25W CF TC=0-400 | 77902 | R-25J |
| A3R3 | 0683-1035 | 1 | | RESISTOR 10K 5% .25W CF TC=0-400 | 77902 | R-25J |
| A3R4 | 0683-6815 | 5 | 1 | RESISTOR 680 5% .25W CF TC=0-400 | 77902 | R-25J |
| A3R5 | 0683-4705 | 8 | | RESISTOR 47 5% .25W CF TC=0-400 | 77902 | R-25J |
| A3R6 | 0683-1315 | 0 | 1 | RESISTOR 130 5% .25W CF TC=0-400 | 77902 | R-25J |
| A3R7 | 0683-6805 | 3 | 1 | RESISTOR 68 5% .25W CF TC=0-400 | 77902 | R-25J |
| A3R9 | 0683-0685 | 5 | 1 | RESISTOR 6.8 5% .25W CF TC=0-400 | 77902 | R-25J |
| A3R10 | 0683-0475 | 1 | 1 | RESISTOR 4.7 5% .25W CF TC=0-400 | 77902 | R-25J |
| A3TP1 | 1251-0600 | 0 | 1 | CONNECTOR-SGL CONT PIN 1.14-MM-BSC-SZ SQ27264 | 27264 | 16-06-0034 |
| A3X1 | 1251-2501 | 4 | 2 | CONNECTOR-SGL CONT SKT .022-IN-BSC-SZ | 00779 | 50462-8 |
| A3X2 | 1251-2501 | 4 | | CONNECTOR-SGL CONT SKT .022-IN-BSC-SZ | 00779 | 50462-8 |
| | 7121-4611 | 2 | 1 | LABEL-INFORMATION .15-IN-WD .6-IN-LG | 28480 | L01003 |
| **A4** | **03585-66504** | **5** | **1** | **2ND MIXER PC BOARD ASSEMBLY** | **28480** | **03585-66504** |
| A4C1 | 0140-0193 | 0 | 1 | CAPACITOR-FXD 82PF +-5% 300VDC MICA | 09023 | |
| A4C2 | 0121-0451 | 3 | 2 | CAPACITOR-V TRMR-AIR 1.7-11PF 175V | 74970 | 187-0106-028 |
| A4C3 | 0121-0451 | 3 | | CAPACITOR-V TRMR-AIR 1.7-11PF 175V | 74970 | 187-0106-028 |
| A4C4 | 0160-6505 | 2 | 6 | C-F .01UF 20% 100V CERMLr | 28480 | RPE121-978X7R103M100V |
| A4C5 | 0160-0945 | 2 | 1 | CAPACITOR-FXD 910PF +-5% 100VDC MICA | 09023 | |

See introduction to this section for ordering information
* Indicates one of several possible values installed

# Table 9-3. Replaceable Parts

| Reference Designation | HP Part Number | C D | Qty. | Description | Mfr. Code | Mfr. Part Number |
|---|---|---|---|---|---|---|
| A4C7 | 0160-6505 | 2 | | C-F .01UF 20% 100V CERMLr | 28480 | RPE121-978X7R103M100V |
| A4C8 | 0160-6505 | 2 | | C-F .01UF 20% 100V CERMLr | 28480 | RPE121-978X7R103M100V |
| A4C12 | 0160-6505 | 2 | | C-F .01UF 20% 100V CERMLr | 28480 | RPE121-978X7R103M100V |
| A4C13 | 0160-6505 | 2 | | C-F .01UF 20% 100V CERMLr | 28480 | RPE121-978X7R103M100V |
| A4C14 | 0160-6505 | 2 | | C-F .01UF 20% 100V CERMLr | 28480 | RPE121-978X7R103M100V |
| A4C15 | 0160-2306 | 3 | 1 | CAPACITOR-FXD 27PF +-5% 300VDC MICA | 00853 | |
| A4C16 | 0160-4381 | 8 | 3 | CAPACITOR-FXD 1.5PF +-.25PF 200VDC CER | 28480 | RPE110-120C0G1R5C200V |
| A4C17 | 0160-4381 | 8 | | CAPACITOR-FXD 1.5PF +-.25PF 200VDC CER | 28480 | RPE110-120C0G1R5C200V |
| A4C18 | 0160-4381 | 8 | | CAPACITOR-FXD 1.5PF +-.25PF 200VDC CER | 28480 | RPE110-120C0G1R5C200V |
| A4C19 | 0160-6508 | 5 | 1 | C-F 22PF 5% 200V CERMLr | 28480 | RPE121-978C0G220J200V |
| A4CR1 | 1906-0210 | 7 | 1 | DIODE-ARRAY VF DIFF=20MV | 02865P01 | |
| A4H2 | 1205-0037 | 0 | 1 | HEAT SINK TO-18-CS | 98978 | TXBF-019-025B |
| A4J1 | 1250-1314 | 3 | 1 | CONNECTOR-RF SM-SLD FEM PC 50-OHM | 98291 | 52-054-0000-226 |
| A4J2 | 1251-4045 | 5 | 2 | CON-SKT GROUND | 13060 | |
| A4J3 | 1251-1636 | 4 | 1 | CONNECTOR-SGL CONT SKT .04-IN-BSC-SZ RND06776 | 06776 | PS-40-832-TG30 |
| A4J4 | 1251-4045 | 5 | | CON-SKT GROUND | 13060 | |
| A4L1 | 9140-0144 | 0 | 2 | INDUCTOR RF-CH-MLD 4.7UH 10% .105DX.26LG99800 | 99800 | 1025-36 |
| A4L2 | 9100-3548 | 0 | 2 | INDUCTOR RF-CH-MLD 470NH 5% .166DX.385LG24226 | 24226 | 15M470J |
| A4L3 | 9100-2252 | 1 | 1 | INDUCTOR RF-CH-MLD 270NH 10% .105DX.26LG24226 | 24226 | 10M270K |
| A4L4 | 9100-2260 | 1 | 1 | INDUCTOR RF-CH-MLD 1.8UH 10% .105DX.26LG24226 | 24226 | 10M1B1K |
| A4L5 | 9140-0210 | 1 | 1 | INDUCTOR RF-CH-MLD 100UH 5% .166DX.385LG99800 | 99800 | 1537-76 |
| A4L6 | 9140-0142 | 8 | 1 | INDUCTOR RF-CH-MLD 2.2UH 10% .105DX.26LG99800 | 99800 | 1025-28 |
| A4L7 | 9140-0297 | 4 | 1 | COIL-VAR 1.98UH-2.42UH Q=150 PC-MTG | 55940 | Q2-2.2 |
| A4L8 | 9140-0144 | 0 | | INDUCTOR RF-CH-MLD 4.7UH 10% .105DX.26LG99800 | 99800 | 1025-36 |
| A4L9 | 9100-3548 | 0 | | INDUCTOR RF-CH-MLD 470NH 5% .166DX.385LG24226 | 24226 | 15M470J |
| A4Q1 | 1854-0247 | 9 | 1 | TRANSISTOR NPN SI TO-39 PD=1W FT=800MHZ | 04713 | |
| A4Q2 | 1854-0305 | 0 | 2 | TRANSISTOR NPN SI TO-18 PD=400MW | 04713 | |
| A4Q3 | 1854-0305 | 0 | | TRANSISTOR NPN SI TO-18 PD=400MW | 04713 | |
| A4R2 | 0683-5115 | 6 | 1 | RESISTOR 510 5% .25W CF TC=0-400 | 77902 | R-25J |
| A4R3 | 0683-2205 | 9 | 2 | RESISTOR 22 5% .25W CF TC=0-400 | 77902 | R-25J |
| A4R4 | 0683-6815 | 5 | 1 | RESISTOR 680 5% .25W CF TC=0-400 | 77902 | R-25J |
| A4R6 | 0683-2205 | 9 | | RESISTOR 22 5% .25W CF TC=0-400 | 77902 | R-25J |
| A4R7 | 0683-6805 | 3 | 1 | RESISTOR 68 5% .25W CF TC=0-400 | 77902 | R-25J |
| A4R8 | 0683-4705 | 8 | 3 | RESISTOR 47 5% .25W CF TC=0-400 | 77902 | R-25J |
| A4R9 | 0683-1525 | 4 | 1 | RESISTOR 1.5K 5% .25W CF TC=0-400 | 77902 | R-25J |
| A4R10 | 0683-4705 | 8 | | RESISTOR 47 5% .25W CF TC=0-400 | 77902 | R-25J |
| A4R11 | 0683-1025 | 9 | 1 | RESISTOR 1K 5% .25W CF TC=0-400 | 77902 | R-25J |
| A4R12 | 0683-2715 | 6 | 1 | RESISTOR 270 5% .25W CF TC=0-400 | 77902 | R-25J |
| A4R13 | 0683-4705 | 8 | | RESISTOR 47 5% .25W CF TC=0-400 | 77902 | R-25J |
| A4R14 | 0683-4715 | 0 | 1 | RESISTOR 470 5% .25W CF TC=0-400 | 77902 | R-25J |
| A4R20 | 0683-3015 | 1 | 2 | RESISTOR 300 5% .25W CF TC=0-400 | 77902 | R-25J |
| A4R21 | 0683-3015 | 1 | | RESISTOR 300 5% .25W CF TC=0-400 | 77902 | R-25J |
| A4T1 | 9100-4038 | 5 | 1 | TRANSFORMER BEAD CORE; WITH CT PRI % SEC07797P01 | 07797P01 | 9100-4038 |
| A4T2 | 9100-4039 | 6 | 1 | TRANSFORMER-POWER | 07797P01 | 9100-4039 |
| A4TP1 | 0360-0124 | 3 | 3 | CONNECTOR-SGL CONT PIN .04-IN-BSC-SZ RND97300 | 97300 | |
| A4TP2 | 0360-0124 | 3 | | CONNECTOR-SGL CONT PIN .04-IN-BSC-SZ RND97300 | 97300 | |
| A4TP3 | 0360-0124 | 3 | | CONNECTOR-SGL CONT PIN .04-IN-BSC-SZ RND97300 | 97300 | |
| A4X2 | 1251-2501 | 4 | 2 | CONNECTOR-SGL CONT SKT .022-IN-BSC-SZ | 00779 | 50462-8 |
| A4X4 | 1251-2501 | 4 | | CONNECTOR-SGL CONT SKT .022-IN-BSC-SZ | 00779 | 50462-8 |
| | 7121-4611 | 2 | 1 | LABEL-INFORMATION .15-IN-WD .6-IN-LG | 28480 | L01003 |
| **A5** | **03585-66505** | **6** | **1** | **3RD MIXER PC BOARD ASSEMBLY** | **28480** | **03585-66505** |
| A5C3 | 0160-5408 | 2 | 1 | CAPACITOR-FXD 75PF +-5% 100VDC CER 0+-3028480 | 28480 | RPA10COG750J100 |
| A5C7 | 0160-6505 | 2 | 3 | C-F .01UF 20% 100V CERMLr | 28480 | RPE121-978X7R103M100V |
| A5C8 | 0180-0098 | 8 | 1 | CAPACITOR-FXD 100UF+-20% 20VDC TA | 13606 | 150D107X002OS2-DYS |
| A5C9 | 0160-6505 | 2 | | C-F .01UF 20% 100V CERMLr | 28480 | RPE121-978X7R103M100V |
| A5C10 | 0160-6510 | 9 | 7 | C-F .1UF 20% 50V CERMLr | 28480 | RPE121-978X7R104M50V |
| A5C11 | 0160-6510 | 9 | | C-F .1UF 20% 50V CERMLr | 28480 | RPE121-978X7R104M50V |
| A5C12 | 0160-6510 | 9 | | C-F .1UF 20% 50V CERMLr | 28480 | RPE121-978X7R104M50V |
| A5C13 | 0160-6510 | 9 | | C-F .1UF 20% 50V CERMLr | 28480 | RPE121-978X7R104M50V |
| A5C14 | 0160-6510 | 9 | | C-F .1UF 20% 50V CERMLr | 28480 | RPE121-978X7R104M50V |
| A5C15 | 0160-6510 | 9 | | C-F .1UF 20% 50V CERMLr | 28480 | RPE121-978X7R104M50V |
| A5C16 | 0160-6505 | 2 | | C-F .01UF 20% 100V CERMLr | 28480 | RPE121-978X7R103M100V |
| A5C17 | 0140-0197 | 4 | 1 | CAPACITOR-FXD 180PF +-5% 300VDC MICA | 09023 | |
| A5C18 | 0160-0376 | 3 | 1 | CAPACITOR-FXD 68PF +-5% 500VDC MICA | 00853 | |
| A5C19 | 0160-2226 | 6 | 1 | CAPACITOR-FXD 2200PF +-5% 300VDC MICA | 00853 | |
| A5C21 | 0160-2150 | 5 | 1 | CAPACITOR-FXD 33PF +-5% 300VDC MICA | 00853 | |

See introduction to this section for ordering information
* Indicates one of several possible values installed

# Table 9-3. Replaceable Parts

| Reference Designation | HP Part Number | C D | Qty. | Description | Mfr. Code | Mfr. Part Number |
|---|---|---|---|---|---|---|
| A5C22 | 0160-2009 | 3 | 1 | CAPACITOR-FXD 820PF +-5% 300VDC MICA | 09023 | |
| A5C23 | 0160-3538 | 5 | 1 | CAPACITOR-FXD 750PF +-5% 100VDC MICA | 00853 | |
| A5C24 | 0140-0210 | 2 | 1 | CAPACITOR-FXD 270PF +-5% 300VDC MICA | 00853 | |
| A5C25 | 0160-2223 | 3 | 1 | CAPACITOR-FXD 1600PF +-5% 300VDC MICA | 00853 | |
| A5C26 | 0160-2055 | 9 | 1 | CAPACITOR-FXD .01UF +80-20% 100VDC CER | 59660 | 805-504 Y5V 103Z |
| A5C27 | 0160-6510 | 9 | | C-F .1UF 20% 50V CERMLr | 28480 | RPE121-978X7R104M50V |
| A5J1 | 1251-2501 | 4 | 1 | CONNECTOR-SGL CONT SKT .022-IN-BSC-SZ | 00779 | 50462-8 |
| A5J2 | 1250-1314 | 3 | 2 | CONNECTOR-RF SM-SLD FEM PC 50-OHM | 98291 | 52-054-0000-226 |
| A5J3 | 1251-1636 | 4 | 2 | CONNECTOR-SGL CONT SKT .04-IN-BSC-SZ RND06776 | 06776 | PS-40-832-TG30 |
| A5J4 | 1251-1636 | 4 | | CONNECTOR-SGL CONT SKT .04-IN-BSC-SZ RND06776 | 06776 | PS-40-832-TG30 |
| A5J5 | 1250-1314 | 3 | | CONNECTOR-RF SM-SLD FEM PC 50-OHM | 98291 | 52-054-0000-226 |
| A5L1 | 9140-0297 | 4 | 4 | COIL-VAR 1.98UH-2.42UH Q=150 PC-MTG | 55940 | Q2-2.2 |
| A5L2 | 9140-0297 | 4 | | COIL-VAR 1.98UH-2.42UH Q=150 PC-MTG | 55940 | Q2-2.2 |
| A5L3 | 9140-0296 | 3 | 1 | COIL-VAR 3.51UH-4.29UH Q=150 PC-MTG | 55940 | Q2-3.9 |
| A5L4 | 9140-0297 | 4 | | COIL-VAR 1.98UH-2.42UH Q=150 PC-MTG | 55940 | Q2-2.2 |
| A5L5 | 9140-0295 | 2 | 1 | COIL-VAR 8.09UH-10.01UH Q=130 PC-MTG | 55940 | Q2-9.1 |
| A5L6 | 9140-0297 | 4 | | COIL-VAR 1.98UH-2.42UH Q=150 PC-MTG | 55940 | Q2-2.2 |
| A5L7 | 9140-0210 | 1 | 2 | INDUCTOR RF-CH-MLD 100UH 5% .166DX.385LG99800 | 99800 | 1537-76 |
| A5L8 | 9100-3551 | 5 | 2 | INDUCTOR RF-CH-MLD 1UH 5% .166DX.385LG | 24226 | 15M101J |
| A5L9 | 9140-0131 | 5 | 2 | INDUCTOR RF-CH-MLD 10MH 5% .25DX.75LG | 99800 | 2500-76 |
| A5L10 | 9140-0131 | 5 | | INDUCTOR RF-CH-MLD 10MH 5% .25DX.75LG | 99800 | 2500-76 |
| A5L11 | 9100-1619 | 2 | 1 | INDUCTOR RF-CH-MLD 6.8UH 10% | 99800 | 1537-32 |
| A5L12 | 9140-0210 | 1 | | INDUCTOR RF-CH-MLD 100UH 5% .166DX.385LG99800 | 99800 | 1537-76 |
| A5L13 | 9100-3551 | 5 | | INDUCTOR RF-CH-MLD 1UH 5% .166DX.385LG | 24226 | 15M101J |
| A5L14 | 9140-0261 | 2 | 1 | INDUCTOR RF-CH-MLD 100NH 5% .166DX.385LG24226 | 24226 | 15M100J |
| A5Q1 | 1854-0485 | 7 | 1 | TRANSISTOR NPN SI TO-104 PD=175MW | 04713 | |
| A5Q2 | 1854-0215 | 1 | 3 | TRANSISTOR NPN SI PD=350MW FT=300MHZ | 04713 | |
| A5Q3 | 1854-0215 | 1 | | TRANSISTOR NPN SI PD=350MW FT=300MHZ | 04713 | |
| A5Q4 | 1854-0215 | 1 | | TRANSISTOR NPN SI PD=350MW FT=300MHZ | 04713 | |
| A5R1 | 0757-0440 | 7 | 2 | RESISTOR 7.5K 1% .125W F TC=0+-100 | 19701 | SFR25H |
| A5R2 | 0683-4705 | 8 | 8 | RESISTOR 47 5% .25W CF TC=0-400 | 77902 | R-25J |
| A5R3 | 0698-3557 | 7 | 2 | RESISTOR 806 1% .125W F TC=0+-100 | 19701 | SFR25H |
| A5R4 | 0698-3557 | 7 | | RESISTOR 806 1% .125W F TC=0+-100 | 19701 | SFR25H |
| A5R5 | 0683-4705 | 8 | | RESISTOR 47 5% .25W CF TC=0-400 | 77902 | R-25J |
| A5R6 | 0757-0440 | 7 | | RESISTOR 7.5K 1% .125W F TC=0+-100 | 19701 | SFR25H |
| A5R7 | 0683-4725 | 2 | 2 | RESISTOR 4.7K 5% .25W CF TC=0-400 | 77902 | R-25J |
| A5R8 | 0683-4705 | 8 | | RESISTOR 47 5% .25W CF TC=0-400 | 77902 | R-25J |
| A5R9 | 0683-4705 | 8 | | RESISTOR 47 5% .25W CF TC=0-400 | 77902 | R-25J |
| A5R10 | 0698-4446 | 5 | 2 | RESISTOR 267 1% .125W F TC=0+-100 | 91637 | CMF-55-1, T-1 |
| A5R11 | 0698-4461 | 4 | 1 | RESISTOR 698 1% .125W F TC=0+-100 | 91637 | CMF-55-1, T-1 |
| A5R12 | 0698-4446 | 5 | | RESISTOR 267 1% .125W F TC=0+-100 | 91637 | CMF-55-1, T-1 |
| A5R13 | 0757-0288 | 1 | 1 | RESISTOR 9.09K 1% .125W F TC=0+-100 | 19701 | SFR25H |
| A5R14 | 0757-0280 | 3 | 1 | RESISTOR 1K 1% .125W F TC=0+-100 | 19701 | SFR25H |
| A5R15 | 0698-0084 | 9 | 1 | RESISTOR 2.15K 1% .125W F TC=0+-100 | 19701 | SFR25H |
| A5R16 | 0698-4453 | 4 | 1 | RESISTOR 402 1% .125W F TC=0+-100 | 91637 | CMF-55-1, T-1 |
| A5R17 | 0683-4705 | 8 | | RESISTOR 47 5% .25W CF TC=0-400 | 77902 | R-25J |
| A5R18 | 0683-4705 | 8 | | RESISTOR 47 5% .25W CF TC=0-400 | 77902 | R-25J |
| A5R19 | 0683-4705 | 8 | | RESISTOR 47 5% .25W CF TC=0-400 | 77902 | R-25J |
| A5R20 | 0683-4705 | 8 | | RESISTOR 47 5% .25W CF TC=0-400 | 77902 | R-25J |
| A5R21 | 0757-0401 | 0 | 2 | RESISTOR 100 1% .125W F TC=0+-100 | 19701 | SFR25H |
| A5R22 | 0757-0401 | 0 | | RESISTOR 100 1% .125W F TC=0+-100 | 19701 | SFR25H |
| A5R23 | 0757-0408 | 7 | 1 | RESISTOR 243 1% .125W F TC=0+-100 | 19701 | SFR25H |
| A5R24 | 0698-4462 | 5 | 1 | RESISTOR 768 1% .125W F TC=0+-100 | 91637 | CMF-55-1, T-1 |
| A5R25 | 0683-4725 | 2 | | RESISTOR 4.7K 5% .25W CF TC=0-400 | 77902 | R-25J |
| A5R26 | 0757-0279 | 0 | 1 | RESISTOR 3.16K 1% .125W F TC=0+-100 | 19701 | SFR25H |
| A5T1 | 08552-6024 | 9 | 1 | XFC TOROID BAL | 28480 | 08552-6024 |
| A5T2 | 08552-6044 | 1 | 1 | XFC TOROID BAL | 28480 | 08552-6044 |
| A5T3 | 9100-4056 | 7 | 2 | TRANSFORMER INDUCTANCE: 110UH +-10% | 55940 | HP110T |
| A5T4 | 9100-4056 | 7 | | TRANSFORMER INDUCTANCE: 110UH +-10% | 55940 | HP110T |
| A5U1 | 1858-0101 | 2 | 1 | XTR DIF3NPN SI XXXXXXX B14DP | 01590P01 | |
| A5X1 | 1251-4045 | 5 | 1 | CON-SKT GROUND | 13060 | |
| | 7121-4611 | 2 | 1 | LABEL-INFORMATION .15-IN-WD .6-IN-LG | 28480 | L01003 |
| **A6** | **03585-66506** | **7** | **4** | **CONNECTOR/ISOLATOR PC BD** | **L0861P01** | |
| A6C1 | 0160-5947 | 4 | 4 | C-F 1000PF +- 10% 50VCD CER | 28480 | GRH40X7R102K50V |
| A6C2 | 0160-5947 | 4 | | C-F 1000PF +- 10% 50VCD CER | 28480 | GRH40X7R102K50V |
| A6C3 | 0160-5947 | 4 | | C-F 1000PF +- 10% 50VCD CER | 28480 | GRH40X7R102K50V |
| A6C4 | 0160-5947 | 4 | | C-F 1000PF +- 10% 50VCD CER | 28480 | GRH40X7R102K50V |
| A6C5 | 0160-6509 | 6 | 15 | C-F .1UF --% 100V CERMLr | 28480 | RPE122-977Z5U104Z100V |

See introduction to this section for ordering information
* Indicates one of several possible values installed

# Table 9-3. Replaceable Parts

| Reference Designation | HP Part Number | C D | Qty. | Description | Mfr. Code | Mfr. Part Number |
|---|---|---|---|---|---|---|
| A6C6 | 0160-6509 | 6 | | C-F .1UF --% 100V CERMLr | 28480 | RPE122-977Z5U104Z100V |
| A6C7 | 0160-6509 | 6 | | C-F .1UF --% 100V CERMLr | 28480 | RPE122-977Z5U104Z100V |
| A6C8 | 0160-6509 | 6 | | C-F .1UF --% 100V CERMLr | 28480 | RPE122-977Z5U104Z100V |
| A6C9 | 0160-6509 | 6 | | C-F .1UF --% 100V CERMLr | 28480 | RPE122-977Z5U104Z100V |
| A6C10 | 0160-6509 | 6 | | C-F .1UF --% 100V CERMLr | 28480 | RPE122-977Z5U104Z100V |
| A6C11 | 0160-6509 | 6 | | C-F .1UF --% 100V CERMLr | 28480 | RPE122-977Z5U104Z100V |
| A6C12 | 0160-6509 | 6 | | C-F .1UF --% 100V CERMLr | 28480 | RPE122-977Z5U104Z100V |
| A6C13 | 0160-6509 | 6 | | C-F .1UF --% 100V CERMLr | 28480 | RPE122-977Z5U104Z100V |
| A6C14 | 0160-6509 | 6 | | C-F .1UF --% 100V CERMLr | 28480 | RPE122-977Z5U104Z100V |
| A6C15 | 0160-6509 | 6 | | C-F .1UF --% 100V CERMLr | 28480 | RPE122-977Z5U104Z100V |
| A6C16 | 0160-6509 | 6 | | C-F .1UF --% 100V CERMLr | 28480 | RPE122-977Z5U104Z100V |
| A6C17 | 0160-0128 | 3 | 3 | CAPACITOR-FXD 2.2UF +-20% 50VDC CER | 13606 | 3C37Z5U225M050A |
| A6C18 | 0160-0128 | 3 | | CAPACITOR-FXD 2.2UF +-20% 50VDC CER | 13606 | 3C37Z5U225M050A |
| A6C19 | 0160-0128 | 3 | | CAPACITOR-FXD 2.2UF +-20% 50VDC CER | 13606 | 3C37Z5U225M050A |
| A6C20 | 0160-6509 | 6 | | C-F .1UF --% 100V CERMLr | 28480 | RPE122-977Z5U104Z100V |
| A6C21 | 0160-6509 | 6 | | C-F .1UF --% 100V CERMLr | 28480 | RPE122-977Z5U104Z100V |
| A6C22 | 0160-6509 | 6 | | C-F .1UF --% 100V CERMLr | 28480 | RPE122-977Z5U104Z100V |
| A6H1 | 1250-1593 | 0 | 1 | ADAPTER-COAX STR M-SMB M-SMB | 98291 | 51-075-0000 |
| A6H2 | 0361-0517 | 0 | 1 | RVT-STB OVHD .089D .23LG BRSTN | 42838 | TAB1-7.5-ST |
| A6H3 | 1530-1942 | 7 | 2 | MCHD CLVS-FULL 4-40 .094D HL | 28480 | |
| A6H4 | 1530-1942 | 7 | | MCHD CLVS-FULL 4-40 .094D HL | 28480 | |
| A6J11 | 1251-2035 | 9 | 15 | CONNECTOR-PC EDGE 15-CONT/ROW 2-ROWS | 03394P01 | 220-624-03 |
| A6J12 | 1251-2035 | 9 | | CONNECTOR-PC EDGE 15-CONT/ROW 2-ROWS | 03394P01 | 220-624-03 |
| A6J13 | 1251-2035 | 9 | | CONNECTOR-PC EDGE 15-CONT/ROW 2-ROWS | 03394P01 | 220-624-03 |
| A6J14 | 1251-2035 | 9 | | CONNECTOR-PC EDGE 15-CONT/ROW 2-ROWS | 03394P01 | 220-624-03 |
| A6J15 | 1251-2035 | 9 | | CONNECTOR-PC EDGE 15-CONT/ROW 2-ROWS | 03394P01 | 220-624-03 |
| A6J16 | 1251-2035 | 9 | | CONNECTOR-PC EDGE 15-CONT/ROW 2-ROWS | 03394P01 | 220-624-03 |
| A6J22 | 1251-2035 | 9 | | CONNECTOR-PC EDGE 15-CONT/ROW 2-ROWS | 03394P01 | 220-624-03 |
| A6J23 | 1251-2035 | 9 | | CONNECTOR-PC EDGE 15-CONT/ROW 2-ROWS | 03394P01 | 220-624-03 |
| A6J24 | 1251-2035 | 9 | | CONNECTOR-PC EDGE 15-CONT/ROW 2-ROWS | 03394P01 | 220-624-03 |
| A6J25 | 1251-2035 | 9 | | CONNECTOR-PC EDGE 15-CONT/ROW 2-ROWS | 03394P01 | 220-624-03 |
| A6J26 | 1251-2035 | 9 | | CONNECTOR-PC EDGE 15-CONT/ROW 2-ROWS | 03394P01 | 220-624-03 |
| A6J27 | 1251-0472 | 4 | 1 | CONNECTOR-PC EDGE 6-CONT/ROW 2-ROWS | 03394P01 | 220-620-03 |
| A6J28 | 1251-2035 | 9 | | CONNECTOR-PC EDGE 15-CONT/ROW 2-ROWS | 03394P01 | 220-624-03 |
| A6J31 | 1251-2035 | 9 | | CONNECTOR-PC EDGE 15-CONT/ROW 2-ROWS | 03394P01 | 220-624-03 |
| A6J32 | 1251-2035 | 9 | | CONNECTOR-PC EDGE 15-CONT/ROW 2-ROWS | 03394P01 | 220-624-03 |
| A6J33 | 1251-2035 | 9 | | CONNECTOR-PC EDGE 15-CONT/ROW 2-ROWS | 03394P01 | 220-624-03 |
| A6J34 | 1251-5160 | 7 | 1 | CONNECTOR-PC EDGE 36-CONT/ROW 2-ROWS | 54453 | EXM 36 DRXN |
| A6L1 | 9140-0210 | 1 | 11 | INDUCTOR RF-CH-MLD 100UH 5% .166DX.385LG99800 | 99800 | 1537-76 |
| A6L2 | 9140-0210 | 1 | | INDUCTOR RF-CH-MLD 100UH 5% .166DX.385LG99800 | 99800 | 1537-76 |
| A6L3 | 9140-0210 | 1 | | INDUCTOR RF-CH-MLD 100UH 5% .166DX.385LG99800 | 99800 | 1537-76 |
| A6L4 | 9140-0210 | 1 | | INDUCTOR RF-CH-MLD 100UH 5% .166DX.385LG99800 | 99800 | 1537-76 |
| A6L5 | 9140-0210 | 1 | | INDUCTOR RF-CH-MLD 100UH 5% .166DX.385LG99800 | 99800 | 1537-76 |
| A6L6 | 9140-0748 | 0 | 5 | INDUCTOR 250UH 25% .25DX.5LG Q=3 | 24226 | CA-253-5 |
| A6L7 | 9140-0029 | 0 | 2 | INDUCTOR RF-CH-MLD 100UH 10% .25DX.313LG99484 | 99484 | 3100-12-101 |
| A6L8 | 9140-0029 | 0 | | INDUCTOR RF-CH-MLD 100UH 10% .25DX.313LG99484 | 99484 | 3100-12-101 |
| A6L9 | 9100-1618 | 1 | 2 | INDUCTOR RF-CH-MLD 5.6UH 10% | 99800 | 1537-30 |
| A6L10 | 9140-0210 | 1 | | INDUCTOR RF-CH-MLD 100UH 5% .166DX.385LG99800 | 99800 | 1537-76 |
| A6L11 | 9140-0210 | 1 | | INDUCTOR RF-CH-MLD 100UH 5% .166DX.385LG99800 | 99800 | 1537-76 |
| A6L12 | 9140-0210 | 1 | | INDUCTOR RF-CH-MLD 100UH 5% .166DX.385LG99800 | 99800 | 1537-76 |
| A6L13 | 9140-0210 | 1 | | INDUCTOR RF-CH-MLD 100UH 5% .166DX.385LG99800 | 99800 | 1537-76 |
| A6L14 | 9140-0210 | 1 | | INDUCTOR RF-CH-MLD 100UH 5% .166DX.385LG99800 | 99800 | 1537-76 |
| A6L15 | 9140-0210 | 1 | | INDUCTOR RF-CH-MLD 100UH 5% .166DX.385LG99800 | 99800 | 1537-76 |
| A6L16 | 9100-1618 | 1 | | INDUCTOR RF-CH-MLD 5.6UH 10% | 99800 | 1537-30 |
| A6L17 | 9100-1791 | 1 | 3 | CORE-FERRITE CHOKE-WIDEBAND;IMP:>360 | 02114 | VK200-19/4B |
| A6L18 | 9100-1791 | 1 | | CORE-FERRITE CHOKE-WIDEBAND;IMP:>360 | 02114 | VK200-19/4B |
| A6L19 | 9100-1791 | 1 | | CORE-FERRITE CHOKE-WIDEBAND;IMP:>360 | 02114 | VK200-19/4B |
| A6L20 | 9140-0748 | 0 | | INDUCTOR 250UH 25% .25DX.5LG Q=3 | 24226 | CA-253-5 |
| A6L21 | 9140-0748 | 0 | | INDUCTOR 250UH 25% .25DX.5LG Q=3 | 24226 | CA-253-5 |
| A6L22 | 9140-0748 | 0 | | INDUCTOR 250UH 25% .25DX.5LG Q=3 | 24226 | CA-253-5 |
| A6L23 | 9140-0748 | 0 | | INDUCTOR 250UH 25% .25DX.5LG Q=3 | 24226 | CA-253-5 |
| | 7121-4611 | 2 | 1 | LABEL-INFORMATION .15-IN-WD .6-IN-LG | 28480 | L01003 |
| **A10** | **03585-66510** | **3** | **1** | **ANALOG MOTHER BOARD PC ASSEMBLY** | **28480** | **03585-66510** |
| A10C1 | 0160-6509 | 6 | 19 | C-F .1UF --% 100V CERMLr | 28480 | RPE122-977Z5U104Z100V |
| A10C2 | 0160-6509 | 6 | | C-F .1UF --% 100V CERMLr | 28480 | RPE122-977Z5U104Z100V |
| A10C3 | 0160-6509 | 6 | | C-F .1UF --% 100V CERMLr | 28480 | RPE122-977Z5U104Z100V |
| A10C4 | 0160-6509 | 6 | | C-F .1UF --% 100V CERMLr | 28480 | RPE122-977Z5U104Z100V |
| A10C5 | 0160-6509 | 6 | | C-F .1UF --% 100V CERMLr | 28480 | RPE122-977Z5U104Z100V |

See introduction to this section for ordering information
* Indicates one of several possible values installed

# Table 9-3. Replaceable Parts

| Reference Designation | HP Part Number | C D | Qty. | Description | Mfr. Code | Mfr. Part Number |
|---|---|---|---|---|---|---|
| A10C6 | 0160-6509 | 6 | | C-F .1UF --% 100V CERMLr | 28480 | RPE122-977Z5U104Z100V |
| A10C7 | 0160-6509 | 6 | | C-F .1UF --% 100V CERMLr | 28480 | RPE122-977Z5U104Z100V |
| A10C8 | 0160-6509 | 6 | | C-F .1UF --% 100V CERMLr | 28480 | RPE122-977Z5U104Z100V |
| A10C9 | 0160-6509 | 6 | | C-F .1UF --% 100V CERMLr | 28480 | RPE122-977Z5U104Z100V |
| A10C10 | 0160-6509 | 6 | | C-F .1UF --% 100V CERMLr | 28480 | RPE122-977Z5U104Z100V |
| A10C11 | 0160-6509 | 6 | | C-F .1UF --% 100V CERMLr | 28480 | RPE122-977Z5U104Z100V |
| A10C12 | 0160-6509 | 6 | | C-F .1UF --% 100V CERMLr | 28480 | RPE122-977Z5U104Z100V |
| A10C13 | 0160-6509 | 6 | | C-F .1UF --% 100V CERMLr | 28480 | RPE122-977Z5U104Z100V |
| A10C14 | 0160-6509 | 6 | | C-F .1UF --% 100V CERMLr | 28480 | RPE122-977Z5U104Z100V |
| A10C15 | 0160-6509 | 6 | | C-F .1UF --% 100V CERMLr | 28480 | RPE122-977Z5U104Z100V |
| A10C16 | 0160-6509 | 6 | | C-F .1UF --% 100V CERMLr | 28480 | RPE122-977Z5U104Z100V |
| A10C17 | 0160-0128 | 3 | 3 | CAPACITOR-FXD 2.2UF +-20% 50VDC CER | 13606 | 3C37Z5U225M050A |
| A10C18 | 0160-0128 | 3 | | CAPACITOR-FXD 2.2UF +-20% 50VDC CER | 13606 | 3C37Z5U225M050A |
| A10C19 | 0160-0128 | 3 | | CAPACITOR-FXD 2.2UF +-20% 50VDC CER | 13606 | 3C37Z5U225M050A |
| A10C20 | 0160-6509 | 6 | | C-F .1UF --% 100V CERMLr | 28480 | RPE122-977Z5U104Z100V |
| A10C21 | 0160-6509 | 6 | | C-F .1UF --% 100V CERMLr | 28480 | RPE122-977Z5U104Z100V |
| A10C22 | 0160-6509 | 6 | | C-F .1UF --% 100V CERMLr | 28480 | RPE122-977Z5U104Z100V |
| A10H1 | 0361-0517 | 0 | 2 | RVT-STB OVHD .089D .23LG BRSTN | 42838 | TAB1-7.5-ST |
| A10H2 | 0361-0517 | 0 | | RVT-STB OVHD .089D .23LG BRSTN | 42838 | TAB1-7.5-ST |
| A10H3 | 1530-1942 | 7 | 2 | MCHD CLVS-FULL 4-40 .094D HL | 28480 | |
| A10H4 | 1530-1942 | 7 | | MCHD CLVS-FULL 4-40 .094D HL | 28480 | |
| A10J11 | 1251-2035 | 9 | 15 | CONNECTOR-PC EDGE 15-CONT/ROW 2-ROWS | 03394P01 | 220-624-03 |
| A10J12 | 1251-2035 | 9 | | CONNECTOR-PC EDGE 15-CONT/ROW 2-ROWS | 03394P01 | 220-624-03 |
| A10J13 | 1251-2035 | 9 | | CONNECTOR-PC EDGE 15-CONT/ROW 2-ROWS | 03394P01 | 220-624-03 |
| A10J14 | 1251-2035 | 9 | | CONNECTOR-PC EDGE 15-CONT/ROW 2-ROWS | 03394P01 | 220-624-03 |
| A10J15 | 1251-2035 | 9 | | CONNECTOR-PC EDGE 15-CONT/ROW 2-ROWS | 03394P01 | 220-624-03 |
| A10J16 | 1251-2035 | 9 | | CONNECTOR-PC EDGE 15-CONT/ROW 2-ROWS | 03394P01 | 220-624-03 |
| A10J22 | 1251-2035 | 9 | | CONNECTOR-PC EDGE 15-CONT/ROW 2-ROWS | 03394P01 | 220-624-03 |
| A10J23 | 1251-2035 | 9 | | CONNECTOR-PC EDGE 15-CONT/ROW 2-ROWS | 03394P01 | 220-624-03 |
| A10J24 | 1251-2035 | 9 | | CONNECTOR-PC EDGE 15-CONT/ROW 2-ROWS | 03394P01 | 220-624-03 |
| A10J25 | 1251-2035 | 9 | | CONNECTOR-PC EDGE 15-CONT/ROW 2-ROWS | 03394P01 | 220-624-03 |
| A10J26 | 1251-2035 | 9 | | CONNECTOR-PC EDGE 15-CONT/ROW 2-ROWS | 03394P01 | 220-624-03 |
| A10J27 | 1251-0472 | 4 | 1 | CONNECTOR-PC EDGE 6-CONT/ROW 2-ROWS | 03394P01 | 220-620-03 |
| A10J28 | 1251-2035 | 9 | | CONNECTOR-PC EDGE 15-CONT/ROW 2-ROWS | 03394P01 | 220-624-03 |
| A10J31 | 1251-2035 | 9 | | CONNECTOR-PC EDGE 15-CONT/ROW 2-ROWS | 03394P01 | 220-624-03 |
| A10J32 | 1251-2035 | 9 | | CONNECTOR-PC EDGE 15-CONT/ROW 2-ROWS | 03394P01 | 220-624-03 |
| A10J33 | 1251-2035 | 9 | | CONNECTOR-PC EDGE 15-CONT/ROW 2-ROWS | 03394P01 | 220-624-03 |
| A10J34 | 1251-5160 | 7 | 1 | CONNECTOR-PC EDGE 36-CONT/ROW 2-ROWS | 54453 | EXM 36 DRXN |
| A10L1 | 9140-0210 | 1 | 11 | INDUCTOR RF-CH-MLD 100UH 5% .166DX.385LG99800 | 99800 | 1537-76 |
| A10L2 | 9140-0210 | 1 | | INDUCTOR RF-CH-MLD 100UH 5% .166DX.385LG99800 | 99800 | 1537-76 |
| A10L3 | 9140-0210 | 1 | | INDUCTOR RF-CH-MLD 100UH 5% .166DX.385LG99800 | 99800 | 1537-76 |
| A10L4 | 9140-0210 | 1 | | INDUCTOR RF-CH-MLD 100UH 5% .166DX.385LG99800 | 99800 | 1537-76 |
| A10L5 | 9140-0210 | 1 | | INDUCTOR RF-CH-MLD 100UH 5% .166DX.385LG99800 | 99800 | 1537-76 |
| A10L6 | 9140-0748 | 0 | 5 | INDUCTOR 250UH 25% .25DX.5LG Q=3 | 24226 | CA-253-5 |
| A10L7 | 9140-0029 | 0 | 2 | INDUCTOR RF-CH-MLD 100UH 10% .25DX.313LG99484 | 99484 | 3100-12-101 |
| A10L8 | 9140-0029 | 0 | | INDUCTOR RF-CH-MLD 100UH 10% .25DX.313LG99484 | 99484 | 3100-12-101 |
| A10L9 | 9100-1618 | 1 | 2 | INDUCTOR RF-CH-MLD 5.6UH 10% | 99800 | 1537-30 |
| A10L10 | 9140-0210 | 1 | | INDUCTOR RF-CH-MLD 100UH 5% .166DX.385LG99800 | 99800 | 1537-76 |
| A10L11 | 9140-0210 | 1 | | INDUCTOR RF-CH-MLD 100UH 5% .166DX.385LG99800 | 99800 | 1537-76 |
| A10L12 | 9140-0210 | 1 | | INDUCTOR RF-CH-MLD 100UH 5% .166DX.385LG99800 | 99800 | 1537-76 |
| A10L13 | 9140-0210 | 1 | | INDUCTOR RF-CH-MLD 100UH 5% .166DX.385LG99800 | 99800 | 1537-76 |
| A10L14 | 9140-0210 | 1 | | INDUCTOR RF-CH-MLD 100UH 5% .166DX.385LG99800 | 99800 | 1537-76 |
| A10L15 | 9140-0210 | 1 | | INDUCTOR RF-CH-MLD 100UH 5% .166DX.385LG99800 | 99800 | 1537-76 |
| A10L16 | 9100-1618 | 1 | | INDUCTOR RF-CH-MLD 5.6UH 10% | 99800 | 1537-30 |
| A10L17 | 9100-1791 | 1 | 3 | CORE-FERRITE CHOKE-WIDEBAND;IMP:>360 | 02114 | VK200-19/4B |
| A10L18 | 9100-1791 | 1 | | CORE-FERRITE CHOKE-WIDEBAND;IMP:>360 | 02114 | VK200-19/4B |
| A10L19 | 9100-1791 | 1 | | CORE-FERRITE CHOKE-WIDEBAND;IMP:>360 | 02114 | VK200-19/4B |
| A10L20 | 9140-0748 | 0 | | INDUCTOR 250UH 25% .25DX.5LG Q=3 | 24226 | CA-253-5 |
| A10L21 | 9140-0748 | 0 | | INDUCTOR 250UH 25% .25DX.5LG Q=3 | 24226 | CA-253-5 |
| A10L22 | 9140-0748 | 0 | | INDUCTOR 250UH 25% .25DX.5LG Q=3 | 24226 | CA-253-5 |
| A10L23 | 9140-0748 | 0 | | INDUCTOR 250UH 25% .25DX.5LG Q=3 | 24226 | CA-253-5 |
| | 7121-4611 | 2 | 1 | LABEL-INFORMATION .15-IN-WD .6-IN-LG | 28480 | L01003 |
| **A14** | **03585-66514** | **7** | **1** | **LOG AMPLIFIER PC BD ASSEMBLY** | **28480** | **03585-66514** |
| A14C1 | 0160-0939 | 4 | 1 | CAPACITOR-FXD 430PF +-5% 300VDC MICA | 09023 | CD15FC431J03 |
| A14C2 | 0180-0197 | 8 | 3 | CAPACITOR-FXD 2.2UF+-10% 20VDC TA | 13606 | 150D225X9020A2-DYS |
| A14C3 | 0160-6509 | 6 | 12 | C-F .1UF --% 100V CERMLr | 28480 | RPE122-977Z5U104Z100V |
| A14C4 | 0180-0197 | 8 | | CAPACITOR-FXD 2.2UF+-10% 20VDC TA | 13606 | 150D225X9020A2-DYS |
| A14C5 | 0160-6509 | 6 | | C-F .1UF --% 100V CERMLr | 28480 | RPE122-977Z5U104Z100V |

See introduction to this section for ordering information
* Indicates one of several possible values installed

# Table 9-3. Replaceable Parts

| Reference Designation | HP Part Number | C D | Qty. | Description | Mfr. Code | Mfr. Part Number |
|---|---|---|---|---|---|---|
| A14C6 | 0140-0195 | 2 | 1 | CAPACITOR-FXD 130PF +-5% 300VDC MICA | 09023 | |
| A14C7 | 0140-0172 | 5 | 1 | CAPACITOR-FXD 3000PF +-1% 100VDC MICA | 09023 | |
| A14C8 | 0140-0198 | 5 | 3 | CAPACITOR-FXD 200PF +-5% 300VDC MICA | 09023 | CD15FD201J03 |
| A14C9 | 0160-0940 | 7 | 1 | CAPACITOR-FXD 2400PF +-5% 500VDC MICA | 09023 | |
| A14C10 | 0160-6509 | 6 | | C-F .1UF --% 100V CERMLr | 28480 | RPE122-977Z5U104Z100V |
| A14C11 | 0160-6509 | 6 | | C-F .1UF --% 100V CERMLr | 28480 | RPE122-977Z5U104Z100V |
| A14C12 | 0160-6527 | 8 | 3 | C-F .01UF --% 100V CERDCr | 28480 | DD109N90GY5U103Z100V |
| A14C13 | 0140-0204 | 4 | 4 | CAPACITOR-FXD 47PF +-5% 500VDC MICA | 09023 | |
| A14C14 | 0160-6656 | 4 | 4 | C-F 5PF 10% 500V MICAs | 57582 | HP15050K5ST |
| A14C15 | 0160-6509 | 6 | | C-F .1UF --% 100V CERMLr | 28480 | RPE122-977Z5U104Z100V |
| A14C16 | 0140-0208 | 8 | 3 | CAPACITOR-FXD 680PF +-5% 300VDC MICA | 09023 | |
| A14C17 | 0140-0208 | 8 | | CAPACITOR-FXD 680PF +-5% 300VDC MICA | 09023 | |
| A14C18 | 0160-6509 | 6 | | C-F .1UF --% 100V CERMLr | 28480 | RPE122-977Z5U104Z100V |
| A14C19 | 0140-0204 | 4 | | CAPACITOR-FXD 47PF +-5% 500VDC MICA | 09023 | |
| A14C20 | 0160-6509 | 6 | | C-F .1UF --% 100V CERMLr | 28480 | RPE122-977Z5U104Z100V |
| A14C21 | 0160-6656 | 4 | | C-F 5PF 10% 500V MICAs | 57582 | HP15050K5ST |
| A14C22 | 0160-6527 | 8 | | C-F .01UF --% 100V CERDCr | 28480 | DD109N90GY5U103Z100V |
| A14C23 | 0140-0208 | 8 | | CAPACITOR-FXD 680PF +-5% 300VDC MICA | 09023 | |
| A14C24 | 0140-0204 | 4 | | CAPACITOR-FXD 47PF +-5% 500VDC MICA | 09023 | |
| A14C25 | 0160-6656 | 4 | | C-F 5PF 10% 500V MICAs | 57582 | HP15050K5ST |
| A14C26 | 0160-6509 | 6 | | C-F .1UF --% 100V CERMLr | 28480 | RPE122-977Z5U104Z100V |
| A14C27 | 0160-6509 | 6 | | C-F .1UF --% 100V CERMLr | 28480 | RPE122-977Z5U104Z100V |
| A14C28 | 0180-0197 | 8 | | CAPACITOR-FXD 2.2UF+-10% 20VDC TA | 13606 | 150D225X9020A2-DYS |
| A14C29 | 0160-0362 | 7 | 1 | CAPACITOR-FXD 510PF +-5% 300VDC MICA | 00853 | |
| A14C30 | 0160-2197 | 0 | 1 | CAPACITOR-FXD 10PF +-5% 300VDC MICA | 00853 | |
| A14C31 | 0160-2257 | 3 | 1 | CAPACITOR-FXD 10PF +-5% 500VDC CER 0+-6052763 | 52763 | |
| A14C32 | 0140-0204 | 4 | | CAPACITOR-FXD 47PF +-5% 500VDC MICA | 09023 | |
| A14C33 | 0160-6656 | 4 | | C-F 5PF 10% 500V MICAs | 57582 | HP15050K5ST |
| A14C34 | 0160-3014 | 2 | 1 | CAPACITOR-FXD 87PF +-1% 300VDC MICA 0+7009023 | 09023 | |
| A14C35 | 0160-2529 | 2 | 1 | CAPACITOR-FXD 160PF +-2% 300VDC MICA | 00853 | |
| A14C36 | 0160-0938 | 3 | 2 | CAPACITOR-FXD 1000PF +-5% 100VDC MICA | 00853 | D15C1E102J |
| A14C37 | 0160-0332 | 1 | 1 | CAPACITOR-FXD 133PF +-1% 300VDC MICA | 09023 | |
| A14C40 | 0160-6527 | 8 | | C-F .01UF --% 100V CERDCr | 28480 | DD109N90GY5U103Z100V |
| A14C41 | 0160-6509 | 6 | | C-F .1UF --% 100V CERMLr | 28480 | RPE122-977Z5U104Z100V |
| A14C42 | 0160-0938 | 3 | | CAPACITOR-FXD 1000PF +-5% 100VDC MICA | 00853 | D15C1E102J |
| A14C43 | 0160-0127 | 2 | 1 | CAPACITOR-FXD 1UF +-20% 25VDC CER | 04222 | SR835E105MAA |
| A14C44 | 0160-6509 | 6 | | C-F .1UF --% 100V CERMLr | 28480 | RPE122-977Z5U104Z100V |
| A14C45 | 0160-6509 | 6 | | C-F .1UF --% 100V CERMLr | 28480 | RPE122-977Z5U104Z100V |
| A14C46 | 0140-0198 | 5 | | CAPACITOR-FXD 200PF +-5% 300VDC MICA | 09023 | CD15FD201J03 |
| A14C47 | 0140-0198 | 5 | | CAPACITOR-FXD 200PF +-5% 300VDC MICA | 09023 | CD15FD201J03 |
| A14C48 | 0160-3303 | 2 | 2 | CAPACITOR-FXD 22PF +-.5PF 100VDC MICA | 09023 | |
| A14C49 | 0160-3303 | 2 | | CAPACITOR-FXD 22PF +-.5PF 100VDC MICA | 09023 | |
| A14C51 | 0160-0161 | 4 | 1 | CAPACITOR-FXD .01UF +-10% 200VDC POLYE | 15766 | HEW-238M |
| A14CR1 | 1901-0179 | 7 | 14 | DIODE-SWITCHING 15V 50MA 750PS | 28480 | 1901-0179 |
| A14CR2 | 1901-0179 | 7 | | DIODE-SWITCHING 15V 50MA 750PS | 28480 | 1901-0179 |
| A14CR3 | 1901-0179 | 7 | | DIODE-SWITCHING 15V 50MA 750PS | 28480 | 1901-0179 |
| A14CR4 | 1901-0179 | 7 | | DIODE-SWITCHING 15V 50MA 750PS | 28480 | 1901-0179 |
| A14CR5 | 1901-0179 | 7 | | DIODE-SWITCHING 15V 50MA 750PS | 28480 | 1901-0179 |
| A14CR6 | 1901-0179 | 7 | | DIODE-SWITCHING 15V 50MA 750PS | 28480 | 1901-0179 |
| A14CR7 | 1901-0179 | 7 | | DIODE-SWITCHING 15V 50MA 750PS | 28480 | 1901-0179 |
| A14CR8 | 1901-0179 | 7 | | DIODE-SWITCHING 15V 50MA 750PS | 28480 | 1901-0179 |
| A14CR9 | 1901-0179 | 7 | | DIODE-SWITCHING 15V 50MA 750PS | 28480 | 1901-0179 |
| A14CR11 | 1901-0179 | 7 | | DIODE-SWITCHING 15V 50MA 750PS | 28480 | 1901-0179 |
| A14CR12 | 1901-0179 | 7 | | DIODE-SWITCHING 15V 50MA 750PS | 28480 | 1901-0179 |
| A14CR13 | 1901-0179 | 7 | | DIODE-SWITCHING 15V 50MA 750PS | 28480 | 1901-0179 |
| A14CR14 | 1901-0179 | 7 | | DIODE-SWITCHING 15V 50MA 750PS | 28480 | 1901-0179 |
| A14CR15 | 1901-0179 | 7 | | DIODE-SWITCHING 15V 50MA 750PS | 28480 | 1901-0179 |
| A14CR16 | 1902-3149 | 9 | 1 | DIODE-ZNR 9.09V 5% DO-35 PD=.4W | 04713 | |
| A14CR17 | 1902-0692 | 1 | 1 | DIODE-ZNR 6.3V 1% DO-7 PD=.4W TC=+.001% | 04713 | |
| A14CR18 | 1901-0518 | 8 | 2 | DIODE-SCHOTTKY SM SIG | 28480 | 1901-0518 |
| A14CR19 | 1901-0518 | 8 | | DIODE-SCHOTTKY SM SIG | 28480 | 1901-0518 |
| A14H1 | 03585-00604 | 8 | 1 | SHTF ASSY-14-1 SHLD STLT | 28480 | 03585-00604 |
| A14H2 | 03585-00605 | 9 | 1 | SHTF ASSY-14-2 SHLD STLT | 28480 | 03585-00605 |
| A14H3 | 0403-0211 | 1 | 1 | MOLD XTR-PC BD BRN .062TKBD | 28480 | |
| A14H4 | 0403-0214 | 4 | 1 | MOLD XTR-PC BD YEL .062TKBD | 28480 | |

See introduction to this section for ordering information
* Indicates one of several possible values installed

# Table 9-3. Replaceable Parts

| Reference Designation | HP Part Number | C D | Qty. | Description | Mfr. Code | Mfr. Part Number |
|---|---|---|---|---|---|---|
| A14H5 | 1200-1423 | 0 | 1 | CONN-SOCKET SIP 9 PIN | 00779 | 643641-2 |
| A14H29 | 1480-0116 | 8 | 2 | PIN-GRV .062-IN-DIA .25-IN-LG STL | 73957 | GP24-063 X 250-14 |
| A14H30 | 1480-0116 | 8 | | PIN-GRV .062-IN-DIA .25-IN-LG STL | 73957 | GP24-063 X 250-14 |
| A14H31 | 2190-0363 | 3 | 8 | WASHER-FL NM NO. 2 .09-IN-ID .15-IN-OD | 34114 | 2-1185108 |
| A14H32 | 2190-0363 | 3 | | WASHER-FL NM NO. 2 .09-IN-ID .15-IN-OD | 34114 | 2-1185108 |
| A14H33 | 2190-0363 | 3 | | WASHER-FL NM NO. 2 .09-IN-ID .15-IN-OD | 34114 | 2-1185108 |
| A14H34 | 2190-0363 | 3 | | WASHER-FL NM NO. 2 .09-IN-ID .15-IN-OD | 34114 | 2-1185108 |
| A14H35 | 2190-0363 | 3 | | WASHER-FL NM NO. 2 .09-IN-ID .15-IN-OD | 34114 | 2-1185108 |
| A14H36 | 2190-0363 | 3 | | WASHER-FL NM NO. 2 .09-IN-ID .15-IN-OD | 34114 | 2-1185108 |
| A14H37 | 2190-0363 | 3 | | WASHER-FL NM NO. 2 .09-IN-ID .15-IN-OD | 34114 | 2-1185108 |
| A14H38 | 2190-0363 | 3 | | WASHER-FL NM NO. 2 .09-IN-ID .15-IN-OD | 34114 | 2-1185108 |
| A14H39 | 2200-0101 | 0 | 8 | SCREW-MACH 4-40 .188-IN-LG PAN-HD-POZI | 83486 | |
| A14H40 | 2200-0101 | 0 | | SCREW-MACH 4-40 .188-IN-LG PAN-HD-POZI | 83486 | |
| A14H41 | 2200-0101 | 0 | | SCREW-MACH 4-40 .188-IN-LG PAN-HD-POZI | 83486 | |
| A14H42 | 2200-0101 | 0 | | SCREW-MACH 4-40 .188-IN-LG PAN-HD-POZI | 83486 | |
| A14H43 | 2200-0101 | 0 | | SCREW-MACH 4-40 .188-IN-LG PAN-HD-POZI | 83486 | |
| A14H44 | 2200-0101 | 0 | | SCREW-MACH 4-40 .188-IN-LG PAN-HD-POZI | 83486 | |
| A14H45 | 2200-0101 | 0 | | SCREW-MACH 4-40 .188-IN-LG PAN-HD-POZI | 83486 | |
| A14H46 | 2200-0101 | 0 | | SCREW-MACH 4-40 .188-IN-LG PAN-HD-POZI | 83486 | |
| A14J1 | 1250-1810 | 4 | 2 | CONNECTOR-RF SMB M PC 50-OHM | 98291 | 51-353-0049 |
| A14J2 | 1250-1810 | 4 | | CONNECTOR-RF SMB M PC 50-OHM | 98291 | 51-353-0049 |
| A14L1 | 9140-0118 | 8 | 2 | INDUCTOR RF-CH-MLD 500UH 5% .2DX.45LG | 99800 | 2500-14 |
| A14L2 | 9140-0210 | 1 | 2 | INDUCTOR RF-CH-MLD 100UH 5% .166DX.385LG99800 | 99800 | 1537-76 |
| A14L3 | 9140-0210 | 1 | | INDUCTOR RF-CH-MLD 100UH 5% .166DX.385LG99800 | 99800 | 1537-76 |
| A14L4 | 9140-0237 | 2 | 1 | INDUCTOR RF-CH-MLD 200UH 5% .166DX.385LG99800 | 99800 | 1537-90 |
| A14L5 | 9140-0294 | 1 | 2 | COIL-VAR 90UH-110UH Q=135 PC-MTG | 55940 | Q2-100 |
| A14L6 | 9140-0118 | 8 | | INDUCTOR RF-CH-MLD 500UH 5% .2DX.45LG | 99800 | 2500-14 |
| A14L7 | 9140-0294 | 1 | | COIL-VAR 90UH-110UH Q=135 PC-MTG | 55940 | Q2-100 |
| A14L8 | 9140-0311 | 3 | 1 | INDUCTOR-FIXED 100UH+-5% AT 350KHZ | 91637 | |
| A14L9 | 9140-0312 | 4 | 1 | INDUCTOR-FIXED FIXED; 130UH+-5% AT 350 | 91637 | |
| A14Q1 | 1854-0404 | 0 | 2 | TRANSISTOR NPN SI TO-18 PD=360MW | 04713 | |
| A14Q2 | 1854-0404 | 0 | | TRANSISTOR NPN SI TO-18 PD=360MW | 04713 | |
| A14Q3 | 1854-0071 | 7 | 3 | TRANSISTOR NPN SI PD=300MW FT=200MHZ | 13606 | |
| A14Q4 | 1854-0071 | 7 | | TRANSISTOR NPN SI PD=300MW FT=200MHZ | 13606 | |
| A14Q5 | 1854-0071 | 7 | | TRANSISTOR NPN SI PD=300MW FT=200MHZ | 13606 | |
| A14Q6 | 1853-0034 | 0 | 1 | TRANSISTOR PNP SI TO-18 PD=360MW | 04713 | |
| A14Q7 | 1853-0020 | 4 | 2 | TRANSISTOR PNP SI PD=300MW FT=150MHZ | 04713 | |
| A14Q8 | 1853-0020 | 4 | | TRANSISTOR PNP SI PD=300MW FT=150MHZ | 04713 | |
| A14Q9 | 1854-0215 | 1 | 2 | TRANSISTOR NPN SI PD=350MW FT=300MHZ | 04713 | |
| A14Q10 | 1854-0215 | 1 | | TRANSISTOR NPN SI PD=350MW FT=300MHZ | 04713 | |
| A14R2 | 0683-1015 | 7 | 5 | RESISTOR 100 5% .25W CF TC=0-400 | 77902 | R-25J |
| A14R3 | 0757-0430 | 5 | 1 | RESISTOR 2.21K 1% .125W F TC=0+-100 | 19701 | SFR25H |
| A14R4 | 0683-1835 | 9 | 3 | RESISTOR 18K 5% .25W CF TC=0-400 | 77902 | R-25J |
| A14R5 | 0683-1235 | 3 | 1 | RESISTOR 12K 5% .25W CF TC=0-400 | 77902 | R-25J |
| A14R6 | 0683-1015 | 7 | | RESISTOR 100 5% .25W CF TC=0-400 | 77902 | R-25J |
| A14R7 | 0683-6215 | 9 | 1 | RESISTOR 620 5% .25W CF TC=0-400 | 77902 | R-25J |
| A14R8 | 2100-1738 | 9 | 2 | RESISTOR-TRMR 10K 10% C TOP-ADJ 1-TRN | 73138 | 82PR10K |
| A14R9 | 0698-4485 | 2 | 3 | RESISTOR 23.2K 1% .125W F TC=0+-100 | 91637 | CMF-55-1, T-1 |
| A14R11 | 0698-4435 | 2 | 4 | RESISTOR 2.49K 1% .125W F TC=0+-100 | 91637 | CMF-55-1, T-1 |
| A14R12 | 0698-4443 | 2 | 1 | RESISTOR 4.53K 1% .125W F TC=0+-100 | 91637 | CMF-55-1, T-1 |
| A14R13 | 0698-4123 | 5 | 1 | RESISTOR 499 1% .125W F TC=0+-100 | 19701 | SFR25H |
| A14R14 | 2100-1738 | 9 | | RESISTOR-TRMR 10K 10% C TOP-ADJ 1-TRN | 73138 | 82PR10K |
| A14R15 | 0698-4485 | 2 | | RESISTOR 23.2K 1% .125W F TC=0+-100 | 91637 | CMF-55-1, T-1 |
| A14R16 | 0698-4435 | 2 | | RESISTOR 2.49K 1% .125W F TC=0+-100 | 91637 | CMF-55-1, T-1 |
| A14R17 | 2100-3161 | 6 | 1 | RESISTOR-TRMR 20K 10% C SIDE-ADJ 17-TRN | 73138 | 89PR20K |
| A14R18 | 0698-3279 | 0 | 5 | RESISTOR 4.99K 1% .125W F TC=0+-100 | 19701 | SFR25H |
| A14R19 | 0698-3279 | 0 | | RESISTOR 4.99K 1% .125W F TC=0+-100 | 19701 | SFR25H |
| A14R21 | 2100-2030 | 6 | 1 | RESISTOR-TRMR 20K 10% C TOP-ADJ 1-TRN | 73138 | 82PR20K |
| A14R22 | 0683-2035 | 3 | 1 | RESISTOR 20K 5% .25W CF TC=0-400 | 77902 | R-25J |
| A14R23 | 0698-4435 | 2 | | RESISTOR 2.49K 1% .125W F TC=0+-100 | 91637 | CMF-55-1, T-1 |
| A14R24 | 0698-3279 | 0 | | RESISTOR 4.99K 1% .125W F TC=0+-100 | 19701 | SFR25H |
| A14R25 | 0698-4469 | 2 | 1 | RESISTOR 1.15K 1% .125W F TC=0+-100 | 91637 | CMF-55-1, T-1 |
| A14R26 | 2100-3353 | 8 | 1 | RESISTOR-TRMR 20K 10% C SIDE-ADJ 1-TRN | 32997 | 3386X-Y46-203 |
| A14R27 | 0698-3279 | 0 | | RESISTOR 4.99K 1% .125W F TC=0+-100 | 19701 | SFR25H |
| A14R28 | 0698-4435 | 2 | | RESISTOR 2.49K 1% .125W F TC=0+-100 | 91637 | CMF-55-1, T-1 |

See introduction to this section for ordering information
* Indicates one of several possible values installed

# Table 9-3. Replaceable Parts

| Reference Designation | HP Part Number | C D | Qty. | Description | Mfr. Code | Mfr. Part Number |
|---|---|---|---|---|---|---|
| A14R29 | 0683-5105 | 4 | 3 | RESISTOR 51 5% .25W CF TC=0-400 | 77902 | R-25J |
| A14R30 | 0683-1015 | 7 | | RESISTOR 100 5% .25W CF TC=0-400 | 77902 | R-25J |
| A14R31 | 0683-1045 | 3 | 1 | RESISTOR 100K 5% .25W CF TC=0-400 | 77902 | R-25J |
| A14R32 | 0683-1835 | 9 | | RESISTOR 18K 5% .25W CF TC=0-400 | 77902 | R-25J |
| A14R33 | 0683-5105 | 4 | | RESISTOR 51 5% .25W CF TC=0-400 | 77902 | R-25J |
| A14R34 | 0683-5105 | 4 | | RESISTOR 51 5% .25W CF TC=0-400 | 77902 | R-25J |
| A14R35 | 0683-1835 | 9 | | RESISTOR 18K 5% .25W CF TC=0-400 | 77902 | R-25J |
| A14R36 | 0698-4485 | 2 | | RESISTOR 23.2K 1% .125W F TC=0+-100 | 91637 | CMF-55-1, T-1 |
| A14R37 | 0683-1525 | 4 | 1 | RESISTOR 1.5K 5% .25W CF TC=0-400 | 77902 | R-25J |
| A14R38 | 0757-0472 | 5 | 1 | RESISTOR 200K 1% .125W F TC=0+-100 | 19701 | SFR25H |
| A14R39 | 0698-3279 | 0 | | RESISTOR 4.99K 1% .125W F TC=0+-100 | 19701 | SFR25H |
| A14R40 | 0683-1025 | 9 | 1 | RESISTOR 1K 5% .25W CF TC=0-400 | 77902 | R-25J |
| A14R41 | 0698-6330 | 0 | 1 | RESISTOR 2K 1% .125W F TC=0+-25 | 19701 | 5033R |
| A14R42 | 0698-5542 | 4 | 1 | RESISTOR 20K 1% .125W F TC=0+-25 | 91637 | CMF-55-1, T-9 |
| A14R43 | 2100-3056 | 8 | 1 | RESISTOR-TRMR 5K 10% C SIDE-ADJ 17-TRN | 73138 | 89PR5K |
| A14R44 | 0698-7082 | 1 | 4 | RESISTOR 100K 1% .125W F TC=0+-25 | 19701 | 5033R |
| A14R45 | 0698-7082 | 1 | | RESISTOR 100K 1% .125W F TC=0+-25 | 19701 | 5033R |
| A14R47 | 0698-7082 | 1 | | RESISTOR 100K 1% .125W F TC=0+-25 | 19701 | 5033R |
| A14R48 | 0698-7082 | 1 | | RESISTOR 100K 1% .125W F TC=0+-25 | 19701 | 5033R |
| A14R49 | 0683-1005 | 5 | 1 | RESISTOR 10 5% .25W CF TC=0-400 | 77902 | R-25J |
| A14R51 | 0757-0465 | 6 | 1 | RESISTOR 100K 1% .125W F TC=0+-100 | 19701 | SFR25H |
| A14R52 | 0698-3275 | 6 | 1 | RESISTOR 2.5K 1% .125W F TC=0+-25 | 19701 | 5033R |
| A14R53 | 0757-0281 | 4 | 1 | RESISTOR 2.74K 1% .125W F TC=0+-100 | 19701 | SFR25H |
| A14R55 | 0683-1035 | 1 | 1 | RESISTOR 10K 5% .25W CF TC=0-400 | 77902 | R-25J |
| A14R56 | 0698-3439 | 4 | 1 | RESISTOR 178 1% .125W F TC=0+-100 | 19701 | SFR25H |
| A14R57 | 2100-0568 | 1 | 1 | RESISTOR-TRMR 100 10% C TOP-ADJ 1-TRN | 32997 | 3386P-Y46-101 |
| A14R58 | 0698-3492 | 9 | 1 | RESISTOR 2.67K 1% .125W F TC=0+-100 | 19701 | SFR25H |
| A14R59 | 0683-1015 | 7 | | RESISTOR 100 5% .25W CF TC=0-400 | 77902 | R-25J |
| A14R61 | 0683-1015 | 7 | | RESISTOR 100 5% .25W CF TC=0-400 | 77902 | R-25J |
| A14R62 | 0698-4453 | 4 | 1 | RESISTOR 402 1% .125W F TC=0+-100 | 91637 | CMF-55-1, T-1 |
| A14R63 | 0683-3315 | 4 | 2 | RESISTOR 330 5% .25W CF TC=0-400 | 77902 | R-25J |
| A14R64 | 0683-3315 | 4 | | RESISTOR 330 5% .25W CF TC=0-400 | 77902 | R-25J |
| A14R65 | 0683-3325 | 6 | 1 | RESISTOR 3.3K 5% .25W CF TC=0-400 | 77902 | R-25J |
| A14R66 | 0683-6825 | 7 | 1 | RESISTOR 6.8K 5% .25W CF TC=0-400 | 77902 | R-25J |
| A14T1 | 9100-3262 | 5 | 2 | TRANSFORMER TRANSFORMER; TOROIDAL PULSE | 91637 | ITU-1229-3 |
| A14T2 | 9100-3262 | 5 | | TRANSFORMER TRANSFORMER; TOROIDAL PULSE | 91637 | ITU-1229-3 |
| A14TP1 | 1251-0600 | 0 | 6 | CONNECTOR-SGL CONT PIN 1.14-MM-BSC-SZ SQ27264 | 27264 | 16-06-0034 |
| A14TP2 | 1251-0600 | 0 | | CONNECTOR-SGL CONT PIN 1.14-MM-BSC-SZ SQ27264 | 27264 | 16-06-0034 |
| A14TP3 | 1251-0600 | 0 | | CONNECTOR-SGL CONT PIN 1.14-MM-BSC-SZ SQ27264 | 27264 | 16-06-0034 |
| A14TP4 | 1251-0600 | 0 | | CONNECTOR-SGL CONT PIN 1.14-MM-BSC-SZ SQ27264 | 27264 | 16-06-0034 |
| A14TP5 | 1251-0600 | 0 | | CONNECTOR-SGL CONT PIN 1.14-MM-BSC-SZ SQ27264 | 27264 | 16-06-0034 |
| A14TP6 | 1251-0600 | 0 | | CONNECTOR-SGL CONT PIN 1.14-MM-BSC-SZ SQ27264 | 27264 | 16-06-0034 |
| A14U1 | 1826-0109 | 3 | 4 | IC OP AMP WB TO-99 PKG | 34371 | |
| A14U2 | 1826-0109 | 3 | | IC OP AMP WB TO-99 PKG | 34371 | |
| A14U3 | 1826-0109 | 3 | | IC OP AMP WB TO-99 PKG | 34371 | |
| A14U4 | 1826-0109 | 3 | | IC OP AMP WB TO-99 PKG | 34371 | |
| A14U5 | 1813-0017 | 5 | 1 | ICC ANLG LOG AMP-3585 | 28480 | 1813-0017 |
| A14U6 | 1826-0043 | 4 | 2 | IC OP AMP GP TO-99 PKG | 27014 | |
| A14U7 | 1826-0043 | 4 | | IC OP AMP GP TO-99 PKG | 27014 | |
| A14U8 | 1826-0089 | 8 | 1 | IC OP AMP WB TO-99 PKG | 34371 | |
| | 4330-0496 | 3 | 2 | INSULATOR-BEAD GLASS | 53101 | KG12 |
| | 7121-4611 | 2 | 1 | LABEL-INFORMATION .15-IN-WD .6-IN-LG | 28480 | L01003 |
| | 0140-0218 | 0 | 1 | CAPACITOR-FXD 160PF +-2% 300VDC MICA | 09023 | |
| **A15** | **03585-66515** | **8** | **1** | **VIDEO FILTER PC BOARD ASSEMBLYLY** | **28480** | **03585-66515** |
| A15C1 | 0180-0116 | 1 | 2 | CAPACITOR-FXD 6.8UF+-10% 35VDC TA | 13606 | 150D685X9035B2-DYS |
| A15C2 | 0180-0229 | 7 | 1 | CAPACITOR-FXD 33UF+-10% 10VDC TA | 13606 | 150D336X9010B2-DYS |
| A15C3 | 0180-0116 | 1 | | CAPACITOR-FXD 6.8UF+-10% 35VDC TA | 13606 | 150D685X9035B2-DYS |
| A15C4 | 0160-2199 | 2 | 1 | CAPACITOR-FXD 30PF +-5% 300VDC MICA | 00853 | |
| A15C5 | 0160-3405 | 5 | 1 | CAPACITOR-FXD 2UF +-10% 50VDC MET-POLYC | 15766 | HEW-249 |
| A15C6 | 0160-0166 | 9 | 1 | CAPACITOR-FXD .068UF +-10% 200VDC POLYE | 15766 | HEW-238M |
| A15C7 | 0160-0154 | 5 | 1 | CAPACITOR-FXD 2200PF +-10% 200VDC POLYE | 15766 | HEW-238M |
| A15CR1 | 1902-0777 | 3 | 1 | DIODE-ZNR 1N825 6.2V 5% DO-7 PD=.4W | 04713 | |
| A15CR2 | 1901-0044 | 5 | 1 | DIODE-SWITCHING 50V 50MA 6NS | 14433 | |
| A15H1 | 0403-0211 | 1 | 1 | MOLD XTR-PC BD BRN .062TKBD | 28480 | |

See introduction to this section for ordering information
* Indicates one of several possible values installed

# Table 9-3. Replaceable Parts

| Reference Designation | HP Part Number | C D | Qty. | Description | Mfr. Code | Mfr. Part Number |
|---|---|---|---|---|---|---|
| A15H2 | 0403-0215 | 5 | 1 | MOLD XTR-PC BD GRN .062TKBD | 28480 | |
| A15H3 | 1480-0116 | 8 | 2 | PIN-GRV .062-IN-DIA .25-IN-LG STL | 73957 | GP24-063 X 250-14 |
| A15H4 | 1480-0116 | 8 | | PIN-GRV .062-IN-DIA .25-IN-LG STL | 73957 | GP24-063 X 250-14 |
| A15J1 | 1250-1810 | 4 | 1 | CONNECTOR-RF SMB M PC 50-OHM | 98291 | 51-353-0049 |
| A15L1 | 9100-1623 | 8 | 2 | INDUCTOR RF-CH-MLD 27UH 5% .166DX.385LG | 99800 | 1537-48 |
| A15L2 | 9100-3560 | 6 | 1 | INDUCTOR RF-CH-MLD 5.6UH 5% .166DX.385LG24226 | 24226 | 15M561J |
| A15L3 | 9100-1623 | 8 | | INDUCTOR RF-CH-MLD 27UH 5% .166DX.385LG | 99800 | 1537-48 |
| A15Q1 | 1855-0420 | 2 | 5 | TRANSISTOR J-FET 2N4391 N-CHAN D-MODE | 17856 | |
| A15Q2 | 1855-0420 | 2 | | TRANSISTOR J-FET 2N4391 N-CHAN D-MODE | 17856 | |
| A15Q3 | 1855-0420 | 2 | | TRANSISTOR J-FET 2N4391 N-CHAN D-MODE | 17856 | |
| A15Q4 | 1855-0420 | 2 | | TRANSISTOR J-FET 2N4391 N-CHAN D-MODE | 17856 | |
| A15Q5 | 1855-0420 | 2 | | TRANSISTOR J-FET 2N4391 N-CHAN D-MODE | 17856 | |
| A15R1 | 0683-2025 | 1 | 2 | RESISTOR 2K 5% .25W CF TC=0-400 | 77902 | R-25J |
| A15R2 | 0698-4469 | 2 | 1 | RESISTOR 1.15K 1% .125W F TC=0+-100 | 91637 | CMF-55-1, T-1 |
| A15R3 | 0698-4471 | 6 | 1 | RESISTOR 7.15K 1% .125W F TC=0+-100 | 91637 | CMF-55-1, T-1 |
| A15R4 | 2100-3058 | 8 | 1 | RESISTOR-TRMR 5K 10% C SIDE-ADJ 17-TRN | 73138 | 89PR5K |
| A15R5 | 0698-4495 | 4 | 1 | RESISTOR 37.4K 1% .125W F TC=0+-100 | 91637 | CMF-55-1, T-1 |
| A15R6 | 0683-1025 | 9 | 1 | RESISTOR 1K 5% .25W CF TC=0-400 | 77902 | R-25J |
| A15R7 | 2100-3109 | 2 | 1 | RESISTOR-TRMR 2K 10% C SIDE-ADJ 17-TRN | 73138 | 89PR2K |
| A15R8 | 0698-3450 | 9 | 1 | RESISTOR 42.2K 1% .125W F TC=0+-100 | 19701 | SFR25H |
| A15R9 | 2100-3154 | 7 | 1 | RESISTOR-TRMR 1K 10% C SIDE-ADJ 17-TRN | 73138 | 89PR1K |
| A15R11 | 0698-3274 | 5 | 1 | RESISTOR 10K 1% .125W F TC=0+-25 | 19701 | 5033R |
| A15R12 | 0698-6318 | 4 | 1 | RESISTOR 1.5K 1% .125W F TC=0+-25 | 91637 | CMF-55-1, T-9 |
| A15R13 | 0698-3275 | 6 | 1 | RESISTOR 2.5K 1% .125W F TC=0+-25 | 19701 | 5033R |
| A15R14 | 0683-1035 | 1 | 3 | RESISTOR 10K 5% .25W CF TC=0-400 | 77902 | R-25J |
| A15R15 | 0698-4508 | 0 | 1 | RESISTOR 78.7K 1% .125W F TC=0+-100 | 91637 | CMF-55-1, T-1 |
| A15R16 | 0698-3499 | 6 | 1 | RESISTOR 40.2K 1% .125W F TC=0+-100 | 19701 | SFR25H |
| A15R17 | 0698-4202 | 1 | 1 | RESISTOR 8.87K 1% .125W F TC=0+-100 | 19701 | SFR25H |
| A15R18 | 0757-0281 | 4 | 1 | RESISTOR 2.74K 1% .125W F TC=0+-100 | 19701 | SFR25H |
| A15R19 | 0683-1035 | 1 | | RESISTOR 10K 5% .25W CF TC=0-400 | 77902 | R-25J |
| A15R21 | 0683-1535 | 6 | 1 | RESISTOR 15K 5% .25W CF TC=0-400 | 77902 | R-25J |
| A15R22 | 0698-6360 | 6 | 1 | RESISTOR 10K .1% .125W F TC=0+-25 | 19701 | 5033R |
| A15R23 | 0698-6625 | 6 | 1 | RESISTOR 6K .1% .125W F TC=0+-25 | 19701 | 5033R |
| A15R24 | 0698-6624 | 5 | 1 | RESISTOR 2K .1% .125W F TC=0+-25 | 19701 | 5033R |
| A15R25 | 0698-6103 | 5 | 1 | RESISTOR 1.6K .1% .125W F TC=0+-50 | 91637 | CMF-55-1, T-2 |
| A15R26 | 0698-6355 | 9 | 1 | RESISTOR 400 .1% .125W F TC=0+-25 | 19701 | 5033R |
| A15R27 | 0757-0449 | 6 | 2 | RESISTOR 20K 1% .125W F TC=0+-100 | 19701 | SFR25H |
| A15R28 | 0757-0449 | 6 | | RESISTOR 20K 1% .125W F TC=0+-100 | 19701 | SFR25H |
| A15R29 | 0683-1035 | 1 | | RESISTOR 10K 5% .25W CF TC=0-400 | 77902 | R-25J |
| A15R31 | 0683-1005 | 5 | 1 | RESISTOR 10 5% .25W CF TC=0-400 | 77902 | R-25J |
| A15R32 | 0683-2035 | 3 | 6 | RESISTOR 20K 5% .25W CF TC=0-400 | 77902 | R-25J |
| A15R33 | 0683-2035 | 3 | | RESISTOR 20K 5% .25W CF TC=0-400 | 77902 | R-25J |
| A15R34 | 0683-2035 | 3 | | RESISTOR 20K 5% .25W CF TC=0-400 | 77902 | R-25J |
| A15R35 | 0683-2035 | 3 | | RESISTOR 20K 5% .25W CF TC=0-400 | 77902 | R-25J |
| A15R36 | 0683-2025 | 1 | | RESISTOR 2K 5% .25W CF TC=0-400 | 77902 | R-25J |
| A15R37 | 0683-2035 | 3 | | RESISTOR 20K 5% .25W CF TC=0-400 | 77902 | R-25J |
| A15R38 | 0683-2035 | 3 | | RESISTOR 20K 5% .25W CF TC=0-400 | 77902 | R-25J |
| A15TP1 | 1251-0600 | 0 | 6 | CONNECTOR-SGL CONT PIN 1.14-MM-BSC-SZ SQ27264 | 27264 | 16-06-0034 |
| A15TP2 | 1251-0600 | 0 | | CONNECTOR-SGL CONT PIN 1.14-MM-BSC-SZ SQ27264 | 27264 | 16-06-0034 |
| A15TP3 | 1251-0600 | 0 | | CONNECTOR-SGL CONT PIN 1.14-MM-BSC-SZ SQ27264 | 27264 | 16-06-0034 |
| A15TP4 | 1251-0600 | 0 | | CONNECTOR-SGL CONT PIN 1.14-MM-BSC-SZ SQ27264 | 27264 | 16-06-0034 |
| A15TP5 | 1251-0600 | 0 | | CONNECTOR-SGL CONT PIN 1.14-MM-BSC-SZ SQ27264 | 27264 | 16-06-0034 |
| A15TP6 | 1251-0600 | 0 | | CONNECTOR-SGL CONT PIN 1.14-MM-BSC-SZ SQ27264 | 27264 | 16-06-0034 |
| A15U1 | 1820-1195 | 7 | 1 | IC FF TTL LS D-TYPE POS-EDGE-TRIG COM | 01295 | |
| A15U2 | 1820-1216 | 3 | 1 | IC DCDR TTL LS 3-TO-8-LINE 3-INP | 01295 | |
| A15U3 | 1820-1196 | 8 | 4 | IC FF TTL LS D-TYPE POS-EDGE-TRIG COM | 01295 | |
| A15U4 | 1820-1196 | 8 | | IC FF TTL LS D-TYPE POS-EDGE-TRIG COM | 01295 | |
| A15U5 | 1820-1196 | 8 | | IC FF TTL LS D-TYPE POS-EDGE-TRIG COM | 01295 | |
| A15U6 | 1820-1196 | 8 | | IC FF TTL LS D-TYPE POS-EDGE-TRIG COM | 01295 | |
| A15U7 | 1820-1984 | 2 | 1 | D/A 10-BIT 16-CBRZ/SDR BPLR | 24355 | |
| A15U8 | 1826-0557 | 5 | 1 | IC OP AMP GP QUAD 14-DIP-C PKG | 27014 | |
| A15U9 | 1826-0759 | 9 | 2 | IC COMPARATOR GP QUAD 14-DIP-C PKG | 27014 | |
| A15U11 | 1826-0759 | 9 | | IC COMPARATOR GP QUAD 14-DIP-C PKG | 27014 | |
| A15U12 | 1826-0340 | 4 | 1 | IC OP AMP LOW-BIAS-H-IMPD TO-99 PKG | 27014 | |
| A15U13 | 1826-0846 | 5 | 1 | ANALOG SWITCH 4 SPST 16 -CBRZ/SDR | 27014 | |

See introduction to this section for ordering information
* Indicates one of several possible values installed

# Table 9-3. Replaceable Parts

| Reference Designation | HP Part Number | C D | Qty. | Description | Mfr. Code | Mfr. Part Number |
|---|---|---|---|---|---|---|
| A15W1 | 1251-4047 | 7 | 1 | CONN-POST TYPE .100-PIN-SPCG 3-CONT | 27264 | 22-05-2031 |
| A15W1 | 1258-0141 | 8 | 1 | CON-JUMPER REM .025P | 22526 | 65474-004 |
| | 7121-4611 | 2 | 1 | LABEL-INFORMATION .15-IN-WD .6-IN-LG | 28480 | L01003 |
| **A16** | **03585-66516** | **9** | **1** | **A/D CONVERTER PC BOARD ASSEMBLY** | **28480** | **03585-66516** |
| A16C1 | 0160-4401 | 3 | 2 | CAPACITOR-FXD .01UF +-10% 100VDC POLYP | 15766 | HEW-446 |
| A16C2 | 0140-0196 | 3 | 1 | CAPACITOR-FXD 150PF +-5% 300VDC MICA | 09023 | |
| A16C3 | 0160-2226 | 6 | 1 | CAPACITOR-FXD 2200PF +-5% 300VDC MICA | 00853 | |
| A16C4 | 0140-0193 | 0 | 1 | CAPACITOR-FXD 82PF +-5% 300VDC MICA | 09023 | |
| A16C5 | 0160-4401 | 3 | | CAPACITOR-FXD .01UF +-10% 100VDC POLYP | 15766 | HEW-446 |
| A16C6 | 0160-3847 | 9 | 1 | CAPACITOR-FXD .01UF +100-0% 50VDC CER | 04222 | SA105C103KAA |
| A16C7 | 0160-2204 | 0 | 1 | CAPACITOR-FXD 100PF +-5% 300VDC MICA | 00853 | D153F101J |
| A16C8 | 0160-2307 | 4 | 2 | CAPACITOR-FXD 47PF +-5% 300VDC MICA | 00853 | |
| A16C9 | 0160-2209 | 5 | 1 | CAPACITOR-FXD 360PF +-5% 300VDC MICA | 00853 | |
| A16C10 | 0160-2307 | 4 | | CAPACITOR-FXD 47PF +-5% 300VDC MICA | 00853 | |
| A16C11 | 0160-6509 | 6 | 10 | C-F .1UF --% 100V CERMLr | 28480 | RPE122-977Z5U104Z100V |
| A16C12 | 0160-6509 | 6 | | C-F .1UF --% 100V CERMLr | 28480 | RPE122-977Z5U104Z100V |
| A16C13 | 0160-6509 | 6 | | C-F .1UF --% 100V CERMLr | 28480 | RPE122-977Z5U104Z100V |
| A16C14 | 0180-0291 | 3 | 2 | CAPACITOR-FXD 1UF+-10% 35VDC TA | 13606 | 150D105X9035A2-DYS |
| A16C15 | 0180-1846 | 6 | 2 | CAPACITOR-FXD 2.2UF+-10% 35VDC TA | 13606 | 150D225X9035B2-DYS |
| A16C16 | 0160-6509 | 6 | | C-F .1UF --% 100V CERMLr | 28480 | RPE122-977Z5U104Z100V |
| A16C17 | 0160-6509 | 6 | | C-F .1UF --% 100V CERMLr | 28480 | RPE122-977Z5U104Z100V |
| A16C18 | 0160-6509 | 6 | | C-F .1UF --% 100V CERMLr | 28480 | RPE122-977Z5U104Z100V |
| A16C19 | 0180-0309 | 4 | 1 | CAPACITOR-FXD 4.7UF+-20% 10VDC TA | 13606 | 150D475X0010A2-DYS |
| A16C21 | 0160-6509 | 6 | | C-F .1UF --% 100V CERMLr | 28480 | RPE122-977Z5U104Z100V |
| A16C22 | 0160-6509 | 6 | | C-F .1UF --% 100V CERMLr | 28480 | RPE122-977Z5U104Z100V |
| A16C23 | 0160-6509 | 6 | | C-F .1UF --% 100V CERMLr | 28480 | RPE122-977Z5U104Z100V |
| A16C24 | 0160-6509 | 6 | | C-F .1UF --% 100V CERMLr | 28480 | RPE122-977Z5U104Z100V |
| A16C25 | 0180-0291 | 3 | | CAPACITOR-FXD 1UF+-10% 35VDC TA | 13606 | 150D105X9035A2-DYS |
| A16C26 | 0180-1846 | 6 | | CAPACITOR-FXD 2.2UF+-10% 35VDC TA | 13606 | 150D225X9035B2-DYS |
| A16CR1 | 1901-0044 | 5 | 5 | DIODE-SWITCHING 50V 50MA 6NS | 14433 | |
| A16CR2 | 1901-0044 | 5 | | DIODE-SWITCHING 50V 50MA 6NS | 14433 | |
| A16CR3 | 1901-0044 | 5 | | DIODE-SWITCHING 50V 50MA 6NS | 14433 | |
| A16CR4 | 1901-0044 | 5 | | DIODE-SWITCHING 50V 50MA 6NS | 14433 | |
| A16CR5 | 1901-0044 | 5 | | DIODE-SWITCHING 50V 50MA 6NS | 14433 | |
| A16CR6 | 1901-0028 | 5 | 2 | DIODE-PWR RECT 400V 750MA DO-29 | 04713 | |
| A16CR7 | 1901-0028 | 5 | | DIODE-PWR RECT 400V 750MA DO-29 | 04713 | |
| A16H9 | 0403-0211 | 1 | 1 | MOLD XTR-PC BD BRN .062TKBD | 28480 | |
| A16H10 | 0403-0216 | 6 | 1 | MOLD XTR-PC BD BLU .062TKBD | 28480 | |
| A16H11 | 0590-1054 | 7 | 4 | THREADED INSERT-NUT 6-32 .065-IN-LG SST | 46384 | KFS2-632 |
| A16H12 | 0590-1054 | 7 | | THREADED INSERT-NUT 6-32 .065-IN-LG SST | 46384 | KFS2-632 |
| A16H13 | 0590-1054 | 7 | | THREADED INSERT-NUT 6-32 .065-IN-LG SST | 46384 | KFS2-632 |
| A16H14 | 0590-1054 | 7 | | THREADED INSERT-NUT 6-32 .065-IN-LG SST | 46384 | KFS2-632 |
| A16H15 | 1480-0116 | 8 | 2 | PIN-GRV .062-IN-DIA .25-IN-LG STL | 73957 | GP24-063 X 250-14 |
| A16H16 | 1480-0116 | 8 | | PIN-GRV .062-IN-DIA .25-IN-LG STL | 73957 | GP24-063 X 250-14 |
| A16H17 | 2360-0115 | 4 | 4 | SCREW-MACH 6-32 .312-IN-LG PAN-HD-POZI | 83486 | |
| A16H18 | 2360-0115 | 4 | | SCREW-MACH 6-32 .312-IN-LG PAN-HD-POZI | 83486 | |
| A16H19 | 2360-0115 | 4 | | SCREW-MACH 6-32 .312-IN-LG PAN-HD-POZI | 83486 | |
| A16H20 | 2360-0115 | 4 | | SCREW-MACH 6-32 .312-IN-LG PAN-HD-POZI | 83486 | |
| A16L1 | 9140-0137 | 1 | 1 | INDUCTOR RF-CH-MLD 1MH 5% .2DX.45LG Q=6099800 | 99800 | 2500-28 |
| A16L2 | 9100-3912 | 2 | 1 | INDUCTOR RF-CH-MLD 15UH 5% .166DX.385LG | 24226 | 15M152J |
| A16Q1 | 1854-0023 | 9 | 1 | TRANSISTOR NPN SI TO-18 PD=360MW | 03334P01 | |
| A16Q2 | 1855-0410 | 0 | 1 | TRANSISTOR J-FET N-CHAN D-MODE TO-18 SI | 27014 | |
| A16R1 | 0698-3242 | 7 | 1 | RESISTOR 357 1% .125W F TC=0+-100 | 19701 | SFR25H |
| A16R2 | 0683-2025 | 1 | 3 | RESISTOR 2K 5% .25W CF TC=0-400 | 77902 | R-25J |
| A16R3 | 0698-4488 | 5 | 1 | RESISTOR 26.7K 1% .125W F TC=0+-100 | 91637 | CMF-55-1, T-1 |
| A16R4 | 0698-4459 | 0 | 1 | RESISTOR 634 1% .125W F TC=0+-100 | 91637 | CMF-55-1, T-1 |
| A16R5 | 0683-2025 | 1 | | RESISTOR 2K 5% .25W CF TC=0-400 | 77902 | R-25J |
| A16R6 | 0683-3045 | 7 | 2 | RESISTOR 300K 5% .25W CF TC=0-800 | 77902 | R-25J |
| A16R7 | 0683-3045 | 7 | | RESISTOR 300K 5% .25W CF TC=0-800 | 77902 | R-25J |
| A16R8 | 0683-1035 | 1 | 2 | RESISTOR 10K 5% .25W CF TC=0-400 | 77902 | R-25J |
| A16R9 | 0683-2235 | 5 | 1 | RESISTOR 22K 5% .25W CF TC=0-400 | 77902 | R-25J |
| A16R11 | 0683-2045 | 5 | 2 | RESISTOR 200K 5% .25W CF TC=0-800 | 77902 | R-25J |
| A16R12 | 0683-1035 | 1 | | RESISTOR 10K 5% .25W CF TC=0-400 | 77902 | R-25J |
| A16R13 | 0683-5125 | 8 | 2 | RESISTOR 5.1K 5% .25W CF TC=0-400 | 77902 | R-25J |

See introduction to this section for ordering information
* Indicates one of several possible values installed

## Table 9-3. Replaceable Parts

| Reference Designation | HP Part Number | C D | Qty. | Description | Mfr. Code | Mfr. Part Number |
|---|---|---|---|---|---|---|
| A16R14 | 0683-2035 | 3 | 1 | RESISTOR 20K 5% .25W CF TC=0-400 | 77902 | R-25J |
| A16R15 | 0683-2045 | 5 | | RESISTOR 200K 5% .25W CF TC=0-800 | 77902 | R-25J |
| A16R16 | 0683-5125 | 8 | | RESISTOR 5.1K 5% .25W CF TC=0-400 | 77902 | R-25J |
| A16R17 | 0698-3274 | 5 | 2 | RESISTOR 10K 1% .125W F TC=0+-25 | 19701 | 5033R |
| A16R18 | 0698-3274 | 5 | | RESISTOR 10K 1% .125W F TC=0+-25 | 19701 | 5033R |
| A16R19 | 2100-3154 | 7 | 1 | RESISTOR-TRMR 1K 10% C SIDE-ADJ 17-TRN | 73138 | 89PR1K |
| A16R20 | 0683-1025 | 9 | 1 | RESISTOR 1K 5% .25W CF TC=0-400 | 77902 | R-25J |
| A16R21 | 2100-3054 | 6 | 1 | RESISTOR-TRMR 50K 10% C SIDE-ADJ 17-TRN | 73138 | 89PR50K |
| A16R22 | 0757-0476 | 9 | 1 | RESISTOR 301K 1% .125W F TC=0+-100 | 19701 | SFR25H |
| A16R23 | 0698-4443 | 2 | 1 | RESISTOR 4.53K 1% .125W F TC=0+-100 | 91637 | CMF-55-1, T-1 |
| A16R24 | 0683-2025 | 1 | | RESISTOR 2K 5% .25W CF TC=0-400 | 77902 | R-25J |
| A16R25 | 0683-1525 | 4 | 1 | RESISTOR 1.5K 5% .25W CF TC=0-400 | 77902 | R-25J |
| A16R26 | 0683-1015 | 7 | 7 | RESISTOR 100 5% .25W CF TC=0-400 | 77902 | R-25J |
| A16R27 | 0683-1015 | 7 | | RESISTOR 100 5% .25W CF TC=0-400 | 77902 | R-25J |
| A16R28 | 0683-1015 | 7 | | RESISTOR 100 5% .25W CF TC=0-400 | 77902 | R-25J |
| A16R29 | 0683-1015 | 7 | | RESISTOR 100 5% .25W CF TC=0-400 | 77902 | R-25J |
| A16R31 | 0683-1015 | 7 | | RESISTOR 100 5% .25W CF TC=0-400 | 77902 | R-25J |
| A16R32 | 0683-1015 | 7 | | RESISTOR 100 5% .25W CF TC=0-400 | 77902 | R-25J |
| A16R33 | 0683-1015 | 7 | | RESISTOR 100 5% .25W CF TC=0-400 | 77902 | R-25J |
| A16TP1 | 1251-0600 | 0 | 8 | CONNECTOR-SGL CONT PIN 1.14-MM-BSC-SZ SQ27264 | 27264 | 16-06-0034 |
| A16TP2 | 1251-0600 | 0 | | CONNECTOR-SGL CONT PIN 1.14-MM-BSC-SZ SQ27264 | 27264 | 16-06-0034 |
| A16TP3 | 1251-0600 | 0 | | CONNECTOR-SGL CONT PIN 1.14-MM-BSC-SZ SQ27264 | 27264 | 16-06-0034 |
| A16TP4 | 1251-0600 | 0 | | CONNECTOR-SGL CONT PIN 1.14-MM-BSC-SZ SQ27264 | 27264 | 16-06-0034 |
| A16TP5 | 1251-0600 | 0 | | CONNECTOR-SGL CONT PIN 1.14-MM-BSC-SZ SQ27264 | 27264 | 16-06-0034 |
| A16TP6 | 1251-0600 | 0 | | CONNECTOR-SGL CONT PIN 1.14-MM-BSC-SZ SQ27264 | 27264 | 16-06-0034 |
| A16TP7 | 1251-0600 | 0 | | CONNECTOR-SGL CONT PIN 1.14-MM-BSC-SZ SQ27264 | 27264 | 16-06-0034 |
| A16TP8 | 1251-0600 | 0 | | CONNECTOR-SGL CONT PIN 1.14-MM-BSC-SZ SQ27264 | 27264 | 16-06-0034 |
| A16U1 | 1826-0185 | 5 | 1 | IC OP AMP SPCL TO-99 PKG | 04550P03 | |
| A16U2 | 1826-0340 | 4 | 1 | IC OP AMP LOW-BIAS-H-IMPD TO-99 PKG | 27014 | |
| A16U3 | 1826-0759 | 9 | 1 | IC COMPARATOR GP QUAD 14-DIP-C PKG | 27014 | |
| A16U4 | 1826-0043 | 4 | 1 | IC OP AMP GP TO-99 PKG | 27014 | |
| A16U5 | 1820-1425 | 6 | 2 | IC SCHMITT-TRIG TTL LS NAND QUAD 2-INP | 01295 | |
| A16U6 | 1820-1984 | 2 | 1 | D/A 10-BIT 16-CBRZ/SDR BPLR | 24355 | |
| A16U7 | 1826-0065 | 0 | 1 | IC COMPARATOR PRCN 8-DIP-P PKG | 27014 | |
| A16U8 | 1820-1978 | 4 | 1 | IC RGTR TTL L 12-BIT | 34335 | |
| A16U9 | 1820-1425 | 6 | | IC SCHMITT-TRIG TTL LS NAND QUAD 2-INP | 01295 | |
| A16U11 | 1826-0402 | 9 | 1 | IC V RGLTR-FXD-POS 14.2/15.8V TO-3 PKG | 06545P01 | |
| A16U12 | 1826-0403 | 0 | 1 | IC V RGLTR-FXD-NEG 14.25/15.75V TO-3 PKG06545P01 | 06545P01 | |
| | 7121-4611 | 2 | 1 | LABEL-INFORMATION .15-IN-WD .6-IN-LG | 28480 | L01003 |
| **A17** | **03585-66517** | **0** | **1** | **IF FILTER NO. 1 PC BD ASSEMBLY** | **28480** | **03585-66517** |
| A17C1 | 0180-0116 | 1 | 2 | CAPACITOR-FXD 6.8UF+-10% 35VDC TA | 13606 | 150D685X9035B2-DYS |
| A17C2 | 0180-0116 | 1 | | CAPACITOR-FXD 6.8UF+-10% 35VDC TA | 13606 | 150D685X9035B2-DYS |
| A17C3 | 0180-0229 | 7 | 1 | CAPACITOR-FXD 33UF+-10% 10VDC TA | 13606 | 150D336X9010B2-DYS |
| A17C4 | 0160-4557 | 0 | 4 | CAPACITOR-FXD .1UF +-20% 50VDC CER | 04222 | SA305C104MAA |
| A17C5 | 0160-6509 | 6 | 15 | C-F .1UF --% 100V CERMLr | 28480 | RPE122-977Z5U104Z100V |
| A17C6 | 0160-4791 | 4 | 1 | CAPACITOR-FXD 10PF +-5% 100VDC CER 0+-3004222 | 04222 | SA106A100JAA |
| A17C7 | 0160-4571 | 8 | 35 | CAPACITOR-FXD .1UF +80-20% 50VDC CER | 04222 | SA105E104ZAA |
| A17C8 | 0160-6509 | 6 | | C-F .1UF --% 100V CERMLr | 28480 | RPE122-977Z5U104Z100V |
| A17C9 | 0140-0184 | 9 | 2 | CAPACITOR-FXD 8200PF +-1% 100VDC MICA | 00853 | |
| A17C10 | 0160-4571 | 8 | | CAPACITOR-FXD .1UF +80-20% 50VDC CER | 04222 | SA105E104ZAA |
| A17C11 | 0160-4557 | 0 | | CAPACITOR-FXD .1UF +-20% 50VDC CER | 04222 | SA305C104MAA |
| A17C12 | 0160-4571 | 8 | | CAPACITOR-FXD .1UF +80-20% 50VDC CER | 04222 | SA105E104ZAA |
| A17C13 | 0140-0184 | 9 | | CAPACITOR-FXD 8200PF +-1% 100VDC MICA | 00853 | |
| A17C14 | 0160-4571 | 8 | | CAPACITOR-FXD .1UF +80-20% 50VDC CER | 04222 | SA105E104ZAA |
| A17C15 | 0160-4571 | 8 | | CAPACITOR-FXD .1UF +80-20% 50VDC CER | 04222 | SA105E104ZAA |
| A17C16 | 0160-4571 | 8 | | CAPACITOR-FXD .1UF +80-20% 50VDC CER | 04222 | SA105E104ZAA |
| A17C17 | 0160-4571 | 8 | | CAPACITOR-FXD .1UF +80-20% 50VDC CER | 04222 | SA105E104ZAA |
| A17C18 | 0160-4571 | 8 | | CAPACITOR-FXD .1UF +80-20% 50VDC CER | 04222 | SA105E104ZAA |
| A17C19 | 0160-4571 | 8 | | CAPACITOR-FXD .1UF +80-20% 50VDC CER | 04222 | SA105E104ZAA |
| A17C20 | 0160-4557 | 0 | | CAPACITOR-FXD .1UF +-20% 50VDC CER | 04222 | SA305C104MAA |
| A17C21 | 0160-4571 | 8 | | CAPACITOR-FXD .1UF +80-20% 50VDC CER | 04222 | SA105E104ZAA |
| A17C22 | 0160-4571 | 8 | | CAPACITOR-FXD .1UF +80-20% 50VDC CER | 04222 | SA105E104ZAA |
| A17C23 | 0160-4571 | 8 | | CAPACITOR-FXD .1UF +80-20% 50VDC CER | 04222 | SA105E104ZAA |
| A17C24 | 0160-4571 | 8 | | CAPACITOR-FXD .1UF +80-20% 50VDC CER | 04222 | SA105E104ZAA |
| A17C25 | 0160-4571 | 8 | | CAPACITOR-FXD .1UF +80-20% 50VDC CER | 04222 | SA105E104ZAA |

See introduction to this section for ordering information
* Indicates one of several possible values installed

# Table 9-3. Replaceable Parts

| Reference Designation | HP Part Number | C D | Qty. | Description | Mfr. Code | Mfr. Part Number |
|---|---|---|---|---|---|---|
| A17C26 | 0160-5407 | 1 | 1 | CAPACITOR-FXD 62PF +-5% 100VDC CER 0+-3028480 | 28480 | RPA10COG620J100 |
| A17C27 | 0121-0180 | 5 | 2 | CAPACITOR-V TRMR-CER 15-60PF 200V PC-MTG52763 | 52763 | 304324 15/60PF N1500 |
| A17C28* | 0160-2202 | 8 | 0 | CAPACITOR-FXD 75PF +-5% 300VDC MICA | 00853 | |
| A17C28* | 0160-2204 | 0 | 0 | CAPACITOR-FXD 100PF +-5% 300VDC MICA | 00853 | D153F101J |
| A17C28* | 0160-2205 | 1 | 0 | CAPACITOR-FXD 120PF +-5% 300VDC MICA | 00853 | |
| A17C29 | 0121-0059 | 7 | 2 | CAPACITOR-V TRMR-CER 2-8PF 350V PC-MTG | 52763 | 304324 2/8PF NPO |
| A17C30 | 0160-4571 | 8 | | CAPACITOR-FXD .1UF +80-20% 50VDC CER | 04222 | SA105E104ZAA |
| A17C31 | 0160-4571 | 8 | | CAPACITOR-FXD .1UF +80-20% 50VDC CER | 04222 | SA105E104ZAA |
| A17C32 | 0160-4571 | 8 | | CAPACITOR-FXD .1UF +80-20% 50VDC CER | 04222 | SA105E104ZAA |
| A17C33 | 0160-4571 | 8 | | CAPACITOR-FXD .1UF +80-20% 50VDC CER | 04222 | SA105E104ZAA |
| A17C34 | 0160-4571 | 8 | | CAPACITOR-FXD .1UF +80-20% 50VDC CER | 04222 | SA105E104ZAA |
| A17C35 | 0160-4571 | 8 | | CAPACITOR-FXD .1UF +80-20% 50VDC CER | 04222 | SA105E104ZAA |
| A17C36 | 0160-0182 | 9 | 1 | CAPACITOR-FXD 47PF +-5% 300VDC MICA | 09023 | |
| A17C37 | 0121-0180 | 5 | | CAPACITOR-V TRMR-CER 15-60PF 200V PC-MTG52763 | 52763 | 304324 15/60PF N1500 |
| A17C38* | 0160-2202 | 8 | | CAPACITOR-FXD 75PF +-5% 300VDC MICA | 00853 | |
| A17C38* | 0160-2204 | 0 | | CAPACITOR-FXD 100PF +-5% 300VDC MICA | 00853 | D153F101J |
| A17C38* | 0160-2205 | 1 | | CAPACITOR-FXD 120PF +-5% 300VDC MICA | 00853 | |
| A17C39 | 0121-0059 | 7 | | CAPACITOR-V TRMR-CER 2-8PF 350V PC-MTG | 52763 | 304324 2/8PF NPO |
| A17C40 | 0160-4571 | 8 | | CAPACITOR-FXD .1UF +80-20% 50VDC CER | 04222 | SA105E104ZAA |
| A17C41 | 0160-4571 | 8 | | CAPACITOR-FXD .1UF +80-20% 50VDC CER | 04222 | SA105E104ZAA |
| A17C42 | 0160-6509 | 6 | | C-F .1UF --% 100V CERMLr | 28480 | RPE122-977Z5U104Z100V |
| A17C43 | 0160-4557 | 0 | | CAPACITOR-FXD .1UF +-20% 50VDC CER | 04222 | SA305C104MAA |
| A17C44 | 0140-0198 | 5 | 1 | CAPACITOR-FXD 200PF +-5% 300VDC MICA | 09023 | CD15FD201J03 |
| A17C45 | 0160-4571 | 8 | | CAPACITOR-FXD .1UF +80-20% 50VDC CER | 04222 | SA105E104ZAA |
| A17C46 | 0160-4571 | 8 | | CAPACITOR-FXD .1UF +80-20% 50VDC CER | 04222 | SA105E104ZAA |
| A17C47 | 0160-6509 | 6 | | C-F .1UF --% 100V CERMLr | 28480 | RPE122-977Z5U104Z100V |
| A17C48 | 0160-4571 | 8 | | CAPACITOR-FXD .1UF +80-20% 50VDC CER | 04222 | SA105E104ZAA |
| A17C50 | 0160-6509 | 6 | | C-F .1UF --% 100V CERMLr | 28480 | RPE122-977Z5U104Z100V |
| A17C51 | 0160-6509 | 6 | | C-F .1UF --% 100V CERMLr | 28480 | RPE122-977Z5U104Z100V |
| A17C52 | 0160-6509 | 6 | | C-F .1UF --% 100V CERMLr | 28480 | RPE122-977Z5U104Z100V |
| A17C53 | 0160-4571 | 8 | | CAPACITOR-FXD .1UF +80-20% 50VDC CER | 04222 | SA105E104ZAA |
| A17C54 | 0160-6509 | 6 | | C-F .1UF --% 100V CERMLr | 28480 | RPE122-977Z5U104Z100V |
| A17C55 | 0160-6509 | 6 | | C-F .1UF --% 100V CERMLr | 28480 | RPE122-977Z5U104Z100V |
| A17C56 | 0160-6509 | 6 | | C-F .1UF --% 100V CERMLr | 28480 | RPE122-977Z5U104Z100V |
| A17C57 | 0160-6509 | 6 | | C-F .1UF --% 100V CERMLr | 28480 | RPE122-977Z5U104Z100V |
| A17C58 | 0160-6509 | 6 | | C-F .1UF --% 100V CERMLr | 28480 | RPE122-977Z5U104Z100V |
| A17C59 | 0160-6509 | 6 | | C-F .1UF --% 100V CERMLr | 28480 | RPE122-977Z5U104Z100V |
| A17C60 | 0160-4571 | 8 | | CAPACITOR-FXD .1UF +80-20% 50VDC CER | 04222 | SA105E104ZAA |
| A17C61 | 0160-4571 | 8 | | CAPACITOR-FXD .1UF +80-20% 50VDC CER | 04222 | SA105E104ZAA |
| A17C62 | 0160-4571 | 8 | | CAPACITOR-FXD .1UF +80-20% 50VDC CER | 04222 | SA105E104ZAA |
| A17C63 | 0160-4571 | 8 | | CAPACITOR-FXD .1UF +80-20% 50VDC CER | 04222 | SA105E104ZAA |
| A17C64 | 0160-4571 | 8 | | CAPACITOR-FXD .1UF +80-20% 50VDC CER | 04222 | SA105E104ZAA |
| A17C65 | 0160-4571 | 8 | | CAPACITOR-FXD .1UF +80-20% 50VDC CER | 04222 | SA105E104ZAA |
| A17C66 | 0160-4571 | 8 | | CAPACITOR-FXD .1UF +80-20% 50VDC CER | 04222 | SA105E104ZAA |
| A17C67 | 0160-6509 | 6 | | C-F .1UF --% 100V CERMLr | 28480 | RPE122-977Z5U104Z100V |
| A17C68 | 0160-6509 | 6 | | C-F .1UF --% 100V CERMLr | 28480 | RPE122-977Z5U104Z100V |
| A17C69 | 0160-4571 | 8 | | CAPACITOR-FXD .1UF +80-20% 50VDC CER | 04222 | SA105E104ZAA |
| A17C70 | 0121-0036 | 0 | 1 | CAPACITOR-V TRMR-CER 5.5-18PF 350V | 52763 | 304324 5.5/18PF NPO |
| A17C71 | 0121-0105 | 4 | 1 | CAPACITOR-V TRMR-CER 9-35PF 200V PC-MTG | 52763 | 304324 9/35PF N650 |
| A17C72 | 0160-4571 | 8 | | CAPACITOR-FXD .1UF +80-20% 50VDC CER | 04222 | SA105E104ZAA |
| A17C73 | 0160-2940 | 1 | 1 | CAPACITOR-FXD 470PF +-5% 300VDC MICA | 00853 | |
| A17C74 | 0160-4532 | 1 | 1 | CAPACITOR-FXD 1000PF +-20% 50VDC CER | 04222 | SA105C102MAA |
| A17CR1 | 1901-0376 | 6 | 8 | DIODE-GEN PRP 35V 50MA DO-35 | 9N171 | |
| A17CR2 | 1901-0376 | 6 | | DIODE-GEN PRP 35V 50MA DO-35 | 9N171 | |
| A17CR3 | 1901-0376 | 6 | | DIODE-GEN PRP 35V 50MA DO-35 | 9N171 | |
| A17CR4 | 1901-0376 | 6 | | DIODE-GEN PRP 35V 50MA DO-35 | 9N171 | |
| A17CR5 | 1901-1255 | 2 | 4 | DIO 35V 50MA D0-35 **GP | 09996 | |
| A17CR6 | 1901-1255 | 2 | | DIO 35V 50MA D0-35 **GP | 09996 | |
| A17CR7 | 1901-1255 | 2 | | DIO 35V 50MA D0-35 **GP | 09996 | |
| A17CR8 | 1901-1255 | 2 | | DIO 35V 50MA D0-35 **GP | 09996 | |
| A17CR9 | 1901-0376 | 6 | | DIODE-GEN PRP 35V 50MA DO-35 | 9N171 | |
| A17CR10 | 1901-0376 | 6 | | DIODE-GEN PRP 35V 50MA DO-35 | 9N171 | |
| A17CR11 | 1901-0376 | 6 | | DIODE-GEN PRP 35V 50MA DO-35 | 9N171 | |
| A17CR12 | 1901-0376 | 6 | | DIODE-GEN PRP 35V 50MA DO-35 | 9N171 | |
| A17CR13 | 1902-3149 | 9 | 1 | DIODE-ZNR 9.09V 5% DO-35 PD=.4W | 04713 | |

See introduction to this section for ordering information
* Indicates one of several possible values installed

# Table 9-3. Replaceable Parts

| Reference Designation | HP Part Number | C D | Qty. | Description | Mfr. Code | Mfr. Part Number |
|---|---|---|---|---|---|---|
| A17CR14 | 1901-0518 | 8 | 2 | DIODE-SCHOTTKY SM SIG | 28480 | 1901-0518 |
| A17CR15 | 1901-0518 | 8 | | DIODE-SCHOTTKY SM SIG | 28480 | 1901-0518 |
| A17J1 | 1250-1810 | 4 | 1 | CONNECTOR-RF SMB M PC 50-OHM | 98291 | 51-353-0049 |
| A17J2 | 1251-4822 | 6 | 4 | CONN-POST TYPE .100-PIN-SPCG 3-CONT | 27264 | 22-03-2031 |
| A17J3 | 1251-4822 | 6 | | CONN-POST TYPE .100-PIN-SPCG 3-CONT | 27264 | 22-03-2031 |
| A17J4 | 1251-4822 | 6 | | CONN-POST TYPE .100-PIN-SPCG 3-CONT | 27264 | 22-03-2031 |
| A17J5 | 1251-4822 | 6 | | CONN-POST TYPE .100-PIN-SPCG 3-CONT | 27264 | 22-03-2031 |
| A17L1 | 9140-0210 | 1 | 2 | INDUCTOR RF-CH-MLD 100UH 5% .166DX.385LG99800 | 99800 | 1537-76 |
| A17L2 | 9140-0210 | 1 | | INDUCTOR RF-CH-MLD 100UH 5% .166DX.385LG99800 | 99800 | 1537-76 |
| A17L3 | 9100-1618 | 1 | 1 | INDUCTOR RF-CH-MLD 5.6UH 10% | 99800 | 1537-30 |
| A17L4 | 9140-0289 | 4 | 2 | COIL-VAR 23UH-27UH Q=200 PC-MTG | 91637 | IPE-1331-15 |
| A17L5 | 9140-0289 | 4 | | COIL-VAR 23UH-27UH Q=200 PC-MTG | 91637 | IPE-1331-15 |
| A17L6 | 9140-0446 | 5 | 1 | INDUCTOR 2MH 10% Q=350 | 91637 | IPE-1431-13 |
| A17L7 | 9140-0447 | 6 | 1 | INDUCTOR 2MH 10% Q=250 | 91637 | IPE-1231-16 |
| A17L8 | 9100-0543 | 9 | 1 | COIL-VAR 900UH-1.1MH Q=112 PC-MTG | 55940 | Q2-1000 |
| A17Q1 | 1854-0215 | 1 | 2 | TRANSISTOR NPN SI PD=350MW FT=300MHZ | 04713 | |
| A17Q2 | 1853-0640 | 4 | 1 | XTR SML1PNP** | 27014 | 6692 |
| A17Q3 | 1854-0351 | 6 | 1 | TRANSISTOR NPN SI TO-18 PD=360MW | 04713 | |
| A17Q4 | 1854-0071 | 7 | 4 | TRANSISTOR NPN SI PD=300MW FT=200MHZ | 13606 | |
| A17Q5 | 1854-0071 | 7 | | TRANSISTOR NPN SI PD=300MW FT=200MHZ | 13606 | |
| A17Q6 | 1854-0071 | 7 | | TRANSISTOR NPN SI PD=300MW FT=200MHZ | 13606 | |
| A17Q7 | 1853-0010 | 2 | 1 | TRANSISTOR PNP SI TO-18 PD=360MW | 04713 | |
| A17Q8 | 1854-0092 | 2 | 1 | TRANSISTOR NPN SI PD=200MW FT=600MHZ | 04713 | |
| A17Q9 | 1854-0215 | 1 | | TRANSISTOR NPN SI PD=350MW FT=300MHZ | 04713 | |
| A17Q10 | 1054-0071 | 7 | | TRANSISTOR NPN SI PD=300MW FT=200MHZ | 13606 | |
| A17R1 | 0683-3925 | 2 | 1 | RESISTOR 3.9K 5% .25W CF TC=0-400 | 77902 | R-25J |
| A17R2 | 0683-2205 | 9 | 1 | RESISTOR 22 5% .25W CF TC=0-400 | 77902 | R-25J |
| A17R3 | 0683-1525 | 4 | 3 | RESISTOR 1.5K 5% .25W CF TC=0-400 | 77902 | R-25J |
| A17R4 | 0683-2215 | 1 | 1 | RESISTOR 220 5% .25W CF TC=0-400 | 77902 | R-25J |
| A17R5 | 0683-1015 | 7 | 21 | RESISTOR 100 5% .25W CF TC=0-400 | 77902 | R-25J |
| A17R6 | 0683-1015 | 7 | | RESISTOR 100 5% .25W CF TC=0-400 | 77902 | R-25J |
| A17R7 | 0683-2035 | 3 | 3 | RESISTOR 20K 5% .25W CF TC=0-400 | 77902 | R-25J |
| A17R8 | 0683-2035 | 3 | | RESISTOR 20K 5% .25W CF TC=0-400 | 77902 | R-25J |
| A17R9 | 0698-3518 | 0 | 2 | RESISTOR 7.32K 1% .125W F TC=0+-100 | 19701 | SFR25H |
| A17R10 | 0757-0279 | 0 | 1 | RESISTOR 3.16K 1% .125W F TC=0+-100 | 19701 | SFR25H |
| A17R11 | 0757-0416 | 7 | 2 | RESISTOR 511 1% .125W F TC=0+-100 | 19701 | SFR25H |
| A17R12 | 2100-2497 | 9 | 2 | RESISTOR-TRMR 2K 10% C TOP-ADJ 1-TRN | 73138 | 82PR2K |
| A17R13 | 0757-0283 | 6 | 4 | RESISTOR 2K 1% .125W F TC=0+-100 | 19701 | SFR25H |
| A17R14 | 0683-1015 | 7 | | RESISTOR 100 5% .25W CF TC=0-400 | 77902 | R-25J |
| A17R15 | 0683-3325 | 6 | 2 | RESISTOR 3.3K 5% .25W CF TC=0-400 | 77902 | R-25J |
| A17R16 | 0683-1015 | 7 | | RESISTOR 100 5% .25W CF TC=0-400 | 77902 | R-25J |
| A17R17 | 0698-3518 | 0 | | RESISTOR 7.32K 1% .125W F TC=0+-100 | 19701 | SFR25H |
| A17R18 | 0698-3496 | 3 | 1 | RESISTOR 3.57K 1% .125W F TC=0+-100 | 19701 | SFR25H |
| A17R19 | 0757-0416 | 7 | | RESISTOR 511 1% .125W F TC=0+-100 | 19701 | SFR25H |
| A17R20 | 2100-2497 | 9 | | RESISTOR-TRMR 2K 10% C TOP-ADJ 1-TRN | 73138 | 82PR2K |
| A17R21 | 0757-0283 | 6 | | RESISTOR 2K 1% .125W F TC=0+-100 | 19701 | SFR25H |
| A17R22 | 0683-1015 | 7 | | RESISTOR 100 5% .25W CF TC=0-400 | 77902 | R-25J |
| A17R23 | 0683-3325 | 6 | | RESISTOR 3.3K 5% .25W CF TC=0-400 | 77902 | R-25J |
| A17R24 | 0683-2035 | 3 | | RESISTOR 20K 5% .25W CF TC=0-400 | 77902 | R-25J |
| A17R25 | 0698-4473 | 8 | 2 | RESISTOR 8.06K 1% .125W F TC=0+-100 | 91637 | CMF-55-1, T-1 |
| A17R26 | 2100-3274 | 2 | 1 | RESISTOR-TRMR 10K 10% C SIDE-ADJ 1-TRN | 32997 | 3386X-Y46-103 |
| A17R27 | 0757-0200 | 7 | 3 | RESISTOR 5.62K 1% .125W F TC=0+-100 | 19701 | SFR25H |
| A17R28 | 2100-3207 | 1 | 2 | RESISTOR-TRMR 5K 10% C SIDE-ADJ 1-TRN | 32997 | 3386X-Y46-502 |
| A17R29 | 0757-0283 | 6 | | RESISTOR 2K 1% .125W F TC=0+-100 | 19701 | SFR25H |
| A17R30 | 2100-3273 | 1 | 3 | RESISTOR-TRMR 2K 10% C SIDE-ADJ 1-TRN | 32997 | 3386X-Y46-202 |
| A17R31 | 0757-0428 | 1 | 1 | RESISTOR 1.62K 1% .125W F TC=0+-100 | 19701 | SFR25H |
| A17R32 | 2100-3273 | 1 | | RESISTOR-TRMR 2K 10% C SIDE-ADJ 1-TRN | 32997 | 3386X-Y46-202 |
| A17R33 | 0698-4196 | 2 | 1 | RESISTOR 1.07K 1% .125W F TC=0+-100 | 19701 | SFR25H |
| A17R34 | 2100-3273 | 1 | | RESISTOR-TRMR 2K 10% C SIDE-ADJ 1-TRN | 32997 | 3386X-Y46-202 |
| A17R35 | 0683-1015 | 7 | | RESISTOR 100 5% .25W CF TC=0-400 | 77902 | R-25J |
| A17R36 | 0683-1015 | 7 | | RESISTOR 100 5% .25W CF TC=0-400 | 77902 | R-25J |
| A17R37 | 0683-1015 | 7 | | RESISTOR 100 5% .25W CF TC=0-400 | 77902 | R-25J |
| A17R38 | 0683-1015 | 7 | | RESISTOR 100 5% .25W CF TC=0-400 | 77902 | R-25J |
| A17R39 | 0683-1525 | 4 | | RESISTOR 1.5K 5% .25W CF TC=0-400 | 77902 | R-25J |
| A17R40 | 0683-3315 | 4 | 1 | RESISTOR 330 5% .25W CF TC=0-400 | 77902 | R-25J |

See introduction to this section for ordering information
* Indicates one of several possible values installed

# Table 9-3. Replaceable Parts

| Reference Designation | HP Part Number | C D | Qty. | Description | Mfr. Code | Mfr. Part Number |
|---|---|---|---|---|---|---|
| A17R41 | 0683-1015 | 7 | | RESISTOR 100 5% .25W CF TC=0-400 | 77902 | R-25J |
| A17R42 | 0683-3025 | 3 | 3 | RESISTOR 3K 5% .25W CF TC=0-400 | 77902 | R-25J |
| A17R43 | 0683-1235 | 3 | 2 | RESISTOR 12K 5% .25W CF TC=0-400 | 77902 | R-25J |
| A17R44 | 0698-4482 | 9 | 1 | RESISTOR 17.4K 1% .125W F TC=0+-100 | 91637 | CMF-55-1, T-1 |
| A17R45 | 0698-4473 | 8 | | RESISTOR 8.06K 1% .125W F TC=0+-100 | 91637 | CMF-55-1, T-1 |
| A17R46 | 0698-4428 | 3 | 1 | RESISTOR 1.69K 1% .125W F TC=0+-100 | 91637 | CMF-55-1, T-1 |
| A17R47 | 0698-3178 | 8 | 1 | RESISTOR 487 1% .125W F TC=0+-100 | 19701 | SFR25H |
| A17R48 | 0757-0401 | 0 | 1 | RESISTOR 100 1% .125W F TC=0+-100 | 19701 | SFR25H |
| A17R49 | 0683-2025 | 1 | 9 | RESISTOR 2K 5% .25W CF TC=0-400 | 77902 | R-25J |
| A17R50 | 0683-2025 | 1 | | RESISTOR 2K 5% .25W CF TC=0-400 | 77902 | R-25J |
| A17R51 | 0683-2025 | 1 | | RESISTOR 2K 5% .25W CF TC=0-400 | 77902 | R-25J |
| A17R52 | 0683-8215 | 3 | 1 | RESISTOR 820 5% .25W CF TC=0-400 | 77902 | R-25J |
| A17R53 | 0683-1045 | 3 | 5 | RESISTOR 100K 5% .25W CF TC=0-400 | 77902 | R-25J |
| A17R54 | 0683-1045 | 3 | | RESISTOR 100K 5% .25W CF TC=0-400 | 77902 | R-25J |
| A17R55 | 0683-1045 | 3 | | RESISTOR 100K 5% .25W CF TC=0-400 | 77902 | R-25J |
| A17R56 | 0683-1045 | 3 | | RESISTOR 100K 5% .25W CF TC=0-400 | 77902 | R-25J |
| A17R57 | 0683-1225 | 1 | 1 | RESISTOR 1.2K 5% .25W CF TC=0-400 | 77902 | R-25J |
| A17R58 | 0683-1015 | 7 | | RESISTOR 100 5% .25W CF TC=0-400 | 77902 | R-25J |
| A17R59 | 0683-3025 | 3 | | RESISTOR 3K 5% .25W CF TC=0-400 | 77902 | R-25J |
| A17R60 | 0683-1235 | 3 | | RESISTOR 12K 5% .25W CF TC=0-400 | 77902 | R-25J |
| A17R61 | 0698-4506 | 8 | 1 | RESISTOR 73.2K 1% .125W F TC=0+-100 | 91637 | CMF-55-1, T-1 |
| A17R62 | 0698-4492 | 1 | 1 | RESISTOR 32.4K 1% .125W F TC=0+-100 | 91637 | CMF-55-1, T-1 |
| A17R63 | 0698-4471 | 6 | 2 | RESISTOR 7.15K 1% .125W F TC=0+-100 | 91637 | CMF-55-1, T-1 |
| A17R64 | 0698-4431 | 8 | 1 | RESISTOR 2.05K 1% .125W F TC=0+-100 | 91637 | CMF-55-1, T-1 |
| A17R65 | 0698-4453 | 4 | 1 | RESISTOR 402 1% .125W F TC=0+-100 | 91637 | CMF-55-1, T-1 |
| A17R66 | 0683-2025 | 1 | | RESISTOR 2K 5% .25W CF TC=0-400 | 77902 | R-25J |
| A17R67 | 0683-2025 | 1 | | RESISTOR 2K 5% .25W CF TC=0-400 | 77902 | R-25J |
| A17R68 | 0683-2025 | 1 | | RESISTOR 2K 5% .25W CF TC=0-400 | 77902 | R-25J |
| A17R69 | 0683-2025 | 1 | | RESISTOR 2K 5% .25W CF TC=0-400 | 77902 | R-25J |
| A17R70 | 0683-2025 | 1 | | RESISTOR 2K 5% .25W CF TC=0-400 | 77902 | R-25J |
| A17R71 | 0683-7525 | 6 | 1 | RESISTOR 7.5K 5% .25W CF TC=0-400 | 77902 | R-25J |
| A17R72 | 0683-4705 | 8 | 5 | RESISTOR 47 5% .25W CF TC=0-400 | 77902 | R-25J |
| A17R73 | 0683-1015 | 7 | | RESISTOR 100 5% .25W CF TC=0-400 | 77902 | R-25J |
| A17R74 | 0683-1015 | 7 | | RESISTOR 100 5% .25W CF TC=0-400 | 77902 | R-25J |
| A17R75 | 0683-1015 | 7 | | RESISTOR 100 5% .25W CF TC=0-400 | 77902 | R-25J |
| A17R76 | 0698-4491 | 0 | 1 | RESISTOR 30.9K 1% .125W F TC=0+-100 | 91637 | CMF-55-1, T-1 |
| A17R77 | 0757-0200 | 7 | | RESISTOR 5.62K 1% .125W F TC=0+-100 | 19701 | SFR25H |
| A17R78 | 0757-0200 | 7 | | RESISTOR 5.62K 1% .125W F TC=0+-100 | 19701 | SFR25H |
| A17R79 | 0698-3382 | 6 | 1 | RESISTOR 5.49K 1% .125W F TC=0+-100 | 19701 | SFR25H |
| A17R80 | 0683-1045 | 3 | | RESISTOR 100K 5% .25W CF TC=0-400 | 77902 | R-25J |
| A17R81 | 0683-1015 | 7 | | RESISTOR 100 5% .25W CF TC=0-400 | 77902 | R-25J |
| A17R82 | 0683-1825 | 7 | 1 | RESISTOR 1.8K 5% .25W CF TC=0-400 | 77902 | R-25J |
| A17R83 | 0683-1015 | 7 | | RESISTOR 100 5% .25W CF TC=0-400 | 77902 | R-25J |
| A17R84 | 0683-2025 | 1 | | RESISTOR 2K 5% .25W CF TC=0-400 | 77902 | R-25J |
| A17R85 | 0683-1035 | 1 | 1 | RESISTOR 10K 5% .25W CF TC=0-400 | 77902 | R-25J |
| A17R86 | 0683-1025 | 9 | 9 | RESISTOR 1K 5% .25W CF TC=0-400 | 77902 | R-25J |
| A17R87 | 0683-1025 | 9 | | RESISTOR 1K 5% .25W CF TC=0-400 | 77902 | R-25J |
| A17R88 | 0683-1025 | 9 | | RESISTOR 1K 5% .25W CF TC=0-400 | 77902 | R-25J |
| A17R89 | 0683-1025 | 9 | | RESISTOR 1K 5% .25W CF TC=0-400 | 77902 | R-25J |
| A17R90 | 0683-1025 | 9 | | RESISTOR 1K 5% .25W CF TC=0-400 | 77902 | R-25J |
| A17R91 | 0683-1025 | 9 | | RESISTOR 1K 5% .25W CF TC=0-400 | 77902 | R-25J |
| A17R92 | 0683-1025 | 9 | | RESISTOR 1K 5% .25W CF TC=0-400 | 77902 | R-25J |
| A17R93 | 0683-1025 | 9 | | RESISTOR 1K 5% .25W CF TC=0-400 | 77902 | R-25J |
| A17R94 | 0683-6815 | 5 | 1 | RESISTOR 680 5% .25W CF TC=0-400 | 77902 | R-25J |
| A17R95 | 0683-4705 | 8 | | RESISTOR 47 5% .25W CF TC=0-400 | 77902 | R-25J |
| A17R96* | 0698-4381 | 7 | 0 | RESISTOR 48.7 1% .125W F TC=0+-100 | 91637 | CMF-55-1, T-1 |
| A17R96* | 0698-4387 | 3 | 0 | RESISTOR 60.4 1% .125W F TC=0+-100 | 91637 | CMF-55-1, T-1 |
| A17R96* | 0698-4393 | 1 | 0 | RESISTOR 73.2 1% .125W F TC=0+-100 | 91637 | CMF-55-1, T-1 |
| A17R96* | 0757-0386 | 0 | 0 | RESISTOR 24.3 1% .125W F TC=0+-100 | 19701 | SFR25H |
| A17R96* | 0757-0390 | 6 | 0 | RESISTOR 36.5 1% .125W F TC=0+-100 | 19701 | SFR25H |
| A17R97* | 0698-4381 | 7 | | RESISTOR 48.7 1% .125W F TC=0+-100 | 91637 | CMF-55-1, T-1 |
| A17R97* | 0698-4387 | 3 | | RESISTOR 60.4 1% .125W F TC=0+-100 | 91637 | CMF-55-1, T-1 |
| A17R97* | 0698-4393 | 1 | | RESISTOR 73.2 1% .125W F TC=0+-100 | 91637 | CMF-55-1, T-1 |
| A17R97* | 0757-0386 | 0 | | RESISTOR 24.3 1% .125W F TC=0+-100 | 19701 | SFR25H |
| A17R97* | 0757-0390 | 6 | | RESISTOR 36.5 1% .125W F TC=0+-100 | 19701 | SFR25H |

See introduction to this section for ordering information
* Indicates one of several possible values installed

# Table 9-3. Replaceable Parts

| Reference Designation | HP Part Number | C D | Qty. | Description | Mfr. Code | Mfr. Part Number |
|---|---|---|---|---|---|---|
| A17R98 | 0698-4467 | 0 | 1 | RESISTOR 1.05K 1% .125W F TC=0+-100 | 91637 | CMF-55-1, T-1 |
| A17R99 | 0698-4471 | 6 | | RESISTOR 7.15K 1% .125W F TC=0+-100 | 91637 | CMF-55-1, T-1 |
| A17R100 | 0683-4705 | 8 | | RESISTOR 47 5% .25W CF TC=0-400 | 77902 | R-25J |
| A17R101 | 0757-0283 | 6 | | RESISTOR 2K 1% .125W F TC=0+-100 | 19701 | SFR25H |
| A17R102 | 0683-5125 | 8 | 1 | RESISTOR 5.1K 5% .25W CF TC=0-400 | 77902 | R-25J |
| A17R103 | 0683-3025 | 3 | | RESISTOR 3K 5% .25W CF TC=0-400 | 77902 | R-25J |
| A17R104 | 0683-1525 | 4 | | RESISTOR 1.5K 5% .25W CF TC=0-400 | 77902 | R-25J |
| A17R105 | 2100-3207 | 1 | | RESISTOR-TRMR 5K 10% C SIDE-ADJ 1-TRN | 32997 | 3386X-Y46-502 |
| A17R106 | 0757-0439 | 4 | 1 | RESISTOR 6.81K 1% .125W F TC=0+-100 | 19701 | SFR25H |
| A17R107 | 0683-4705 | 8 | | RESISTOR 47 5% .25W CF TC=0-400 | 77902 | R-25J |
| A17R108 | 0683-1015 | 7 | | RESISTOR 100 5% .25W CF TC=0-400 | 77902 | R-25J |
| A17R109 | 0683-4705 | 8 | | RESISTOR 47 5% .25W CF TC=0-400 | 77902 | R-25J |
| A17R110 | 0683-1015 | 7 | | RESISTOR 100 5% .25W CF TC=0-400 | 77902 | R-25J |
| A17R111 | 0683-1015 | 7 | | RESISTOR 100 5% .25W CF TC=0-400 | 77902 | R-25J |
| A17R112 | 0683-1015 | 7 | | RESISTOR 100 5% .25W CF TC=0-400 | 77902 | R-25J |
| A17R113 | 0683-1025 | 9 | | RESISTOR 1K 5% .25W CF TC=0-400 | 77902 | R-25J |
| A17R114 | 0757-0446 | 3 | 1 | RESISTOR 15K 1% .125W F TC=0+-100 | 19701 | SFR25H |
| A17R115 | 0683-1015 | 7 | | RESISTOR 100 5% .25W CF TC=0-400 | 77902 | R-25J |
| A17RT1 | 0837-0086 | 7 | 2 | THERMISTOR DISC 200-OHM TC=-4.4%/C-DEG | 15801 | KB22J24 |
| A17RT2 | 0837-0086 | 7 | | THERMISTOR DISC 200-OHM TC=-4.4%/C-DEG | 15801 | KB22J24 |
| A17RT3 | 0837-0085 | 6 | 1 | THERMISTOR ROD 680-OHM TC=+.7%/C-DEG | 15454 | DG125-681-K |
| A17RT4 | 0837-0119 | 7 | 1 | THERMISTOR TUB WITH AXL LEADS 5K-OHM | 50157 | 3K502K |
| A17T1 | 9100-3262 | 5 | 2 | TRANSFORMER TRANSFORMER; TOROIDAL PULSE | 91637 | ITU-1229-3 |
| A17T2 | 9100-3262 | 5 | | TRANSFORMER TRANSFORMER; TOROIDAL PULSE | 91637 | ITU-1229-3 |
| A17TP1 | 1251-0600 | 0 | 7 | CONNECTOR-SGL CONT PIN 1.14-MM-BSC-SZ SQ27264 | 27264 | 16-06-0034 |
| A17TP2 | 1251-0600 | 0 | | CONNECTOR-SGL CONT PIN 1.14-MM-BSC-SZ SQ27264 | 27264 | 16-06-0034 |
| A17TP3 | 1251-0600 | 0 | | CONNECTOR-SGL CONT PIN 1.14-MM-BSC-SZ SQ27264 | 27264 | 16-06-0034 |
| A17TP4 | 1251-0600 | 0 | | CONNECTOR-SGL CONT PIN 1.14-MM-BSC-SZ SQ27264 | 27264 | 16-06-0034 |
| A17TP5 | 1251-0600 | 0 | | CONNECTOR-SGL CONT PIN 1.14-MM-BSC-SZ SQ27264 | 27264 | 16-06-0034 |
| A17TP6 | 1251-0600 | 0 | | CONNECTOR-SGL CONT PIN 1.14-MM-BSC-SZ SQ27264 | 27264 | 16-06-0034 |
| A17TP7 | 0360-0124 | 3 | 1 | CONNECTOR-SGL CONT PIN .04-IN-BSC-SZ RND97300 | 97300 | |
| A17TP8 | 1251-0600 | 0 | | CONNECTOR-SGL CONT PIN 1.14-MM-BSC-SZ SQ27264 | 27264 | 16-06-0034 |
| A17U1 | 1820-1196 | 8 | 2 | IC FF TTL LS D-TYPE POS-EDGE-TRIG COM | 01295 | |
| A17U2 | 1826-1019 | 6 | 5 | ANALOG SWITCH 4 SPST 16 -CERDIP | 17856 | |
| A17U3 | 1826-1019 | 6 | | ANALOG SWITCH 4 SPST 16 -CERDIP | 17856 | |
| A17U4 | 1826-1019 | 6 | | ANALOG SWITCH 4 SPST 16 -CERDIP | 17856 | |
| A17U5 | 1826-1019 | 6 | | ANALOG SWITCH 4 SPST 16 -CERDIP | 17856 | |
| A17U6 | 1826-1019 | 6 | | ANALOG SWITCH 4 SPST 16 -CERDIP | 17856 | |
| A17U7 | 1820-1216 | 3 | 1 | IC DCDR TTL LS 3-TO-8-LINE 3-INP | 01295 | |
| A17U8 | 1820-1195 | 7 | 1 | IC FF TTL LS D-TYPE POS-EDGE-TRIG COM | 01295 | |
| A17U9 | 1820-1196 | 8 | | IC FF TTL LS D-TYPE POS-EDGE-TRIG COM | 01295 | |
| A17W2 | 1258-0141 | 8 | 4 | CON-JUMPER REM .025P | 22526 | 65474-004 |
| A17W3 | 1258-0141 | 8 | | CON-JUMPER REM .025P | 22526 | 65474-004 |
| A17W4 | 1258-0141 | 8 | | CON-JUMPER REM .025P | 22526 | 65474-004 |
| A17W5 | 1258-0141 | 8 | | CON-JUMPER REM .025P | 22526 | 65474-004 |
| | 4330-0496 | 3 | 4 | INSULATOR-BEAD GLASS | 53101 | KG12 |
| | 1480-0116 | 8 | 2 | PIN-GRV .062-IN-DIA .25-IN-LG STL | 73957 | GP24-063 X 250-14 |
| | 6960-0080 | 8 | 1 | PLUG-HOLE FL-HD FOR .185-D-HOLE TFE | 98291 | 119-0052-00-0-009 |
| | 0403-0211 | 1 | 1 | MOLD XTR-PC BD BRN .062TKBD | 28480 | |
| | 0403-0217 | 7 | 1 | MOLD XTR-PC BD VIO .062TKBD | 28480 | |
| | 7121-4611 | 2 | 1 | LABEL-INFORMATION .15-IN-WD .6-IN-LG | 28480 | L01003 |
| **A18** | **03585-66518** | **1** | **1** | **IF GAIN PC BOARD ASSEMBLY** | **28480** | **03585-66518** |
| A18C1 | 0180-1974 | 1 | 2 | CAPACITOR-FXD 10UF+-10% 35VDC TA | 13606 | 150D106X9035R2-DYS |
| A18C2 | 0180-1974 | 1 | | CAPACITOR-FXD 10UF+-10% 35VDC TA | 13606 | 150D106X9035R2-DYS |
| A18C3 | 0180-0229 | 7 | 1 | CAPACITOR-FXD 33UF+-10% 10VDC TA | 13606 | 150D336X9010B2-DYS |
| A18C4 | 0160-4557 | 0 | 10 | CAPACITOR-FXD .1UF +-20% 50VDC CER | 04222 | SA305C104MAA |
| A18C5 | 0160-4571 | 8 | 58 | CAPACITOR-FXD .1UF +80-20% 50VDC CER | 04222 | SA105E104ZAA |
| A18C6 | 0160-4571 | 8 | | CAPACITOR-FXD .1UF +80-20% 50VDC CER | 04222 | SA105E104ZAA |
| A18C7 | 0160-4571 | 8 | | CAPACITOR-FXD .1UF +80-20% 50VDC CER | 04222 | SA105E104ZAA |
| A18C8 | 0140-0184 | 9 | 1 | CAPACITOR-FXD 8200PF +-1% 100VDC MICA | 00853 | |
| A18C9 | 0160-4571 | 8 | | CAPACITOR-FXD .1UF +80-20% 50VDC CER | 04222 | SA105E104ZAA |
| A18C10 | 0160-4571 | 8 | | CAPACITOR-FXD .1UF +80-20% 50VDC CER | 04222 | SA105E104ZAA |

See introduction to this section for ordering information
* Indicates one of several possible values installed

# Table 9-3. Replaceable Parts

| Reference Designation | HP Part Number | C D | Qty. | Description | Mfr. Code | Mfr. Part Number |
|---|---|---|---|---|---|---|
| A18C11 | 0160-4571 | 8 | | CAPACITOR-FXD .1UF +80-20% 50VDC CER | 04222 | SA105E104ZAA |
| A18C12 | 0160-4571 | 8 | | CAPACITOR-FXD .1UF +80-20% 50VDC CER | 04222 | SA105E104ZAA |
| A18C13 | 0160-4571 | 8 | | CAPACITOR-FXD .1UF +80-20% 50VDC CER | 04222 | SA105E104ZAA |
| A18C14 | 0160-4571 | 8 | | CAPACITOR-FXD .1UF +80-20% 50VDC CER | 04222 | SA105E104ZAA |
| A18C15 | 0160-4557 | 0 | | CAPACITOR-FXD .1UF +-20% 50VDC CER | 04222 | SA305C104MAA |
| A18C16 | 0160-4571 | 8 | | CAPACITOR-FXD .1UF +80-20% 50VDC CER | 04222 | SA105E104ZAA |
| A18C17 | 0160-4571 | 8 | | CAPACITOR-FXD .1UF +80-20% 50VDC CER | 04222 | SA105E104ZAA |
| A18C18 | 0160-4571 | 8 | | CAPACITOR-FXD .1UF +80-20% 50VDC CER | 04222 | SA105E104ZAA |
| A18C19 | 0160-4571 | 8 | | CAPACITOR-FXD .1UF +80-20% 50VDC CER | 04222 | SA105E104ZAA |
| A18C20 | 0160-4571 | 8 | | CAPACITOR-FXD .1UF +80-20% 50VDC CER | 04222 | SA105E104ZAA |
| A18C21 | 0160-0182 | 9 | 1 | CAPACITOR-FXD 47PF +-5% 300VDC MICA | 09023 | |
| A18C22 | 0121-0180 | 5 | 1 | CAPACITOR-V TRMR-CER 15-60PF 200V PC-MTG52763 | 52763 | 304324 15/60PF N1500 |
| A18C23* | 0160-2202 | 8 | 0 | CAPACITOR-FXD 75PF +-5% 300VDC MICA | 00853 | |
| A18C23* | 0160-2204 | 0 | 0 | CAPACITOR-FXD 100PF +-5% 300VDC MICA | 00853 | D153F101J |
| A18C23* | 0160-2205 | 1 | 0 | CAPACITOR-FXD 120PF +-5% 300VDC MICA | 00853 | |
| A18C24 | 0121-0059 | 7 | 1 | CAPACITOR-V TRMR-CER 2-8PF 350V PC-MTG | 52763 | 304324 2/8PF NPO |
| A18C25 | 0160-4571 | 8 | | CAPACITOR-FXD .1UF +80-20% 50VDC CER | 04222 | SA105E104ZAA |
| A18C26 | 0160-4571 | 8 | | CAPACITOR-FXD .1UF +80-20% 50VDC CER | 04222 | SA105E104ZAA |
| A18C27 | 0160-4557 | 0 | | CAPACITOR-FXD .1UF +-20% 50VDC CER | 04222 | SA305C104MAA |
| A18C28 | 0160-4557 | 0 | | CAPACITOR-FXD .1UF +-20% 50VDC CER | 04222 | SA305C104MAA |
| A18C29 | 0160-0127 | 2 | 1 | CAPACITOR-FXD 1UF +-20% 25VDC CER | 04222 | SR835E105MAA |
| A18C30 | 0160-4557 | 0 | | CAPACITOR-FXD .1UF +-20% 50VDC CER | 04222 | SA305C104MAA |
| A18C31 | 0160-4571 | 8 | | CAPACITOR-FXD .1UF +80-20% 50VDC CER | 04222 | SA105E104ZAA |
| A18C32 | 0160-4571 | 8 | | CAPACITOR-FXD .1UF +80-20% 50VDC CER | 04222 | SA105E104ZAA |
| A18C33 | 0160-4557 | 0 | | CAPACITOR-FXD .1UF +-20% 50VDC CER | 04222 | SA305C104MAA |
| A18C34 | 0160-4557 | 0 | | CAPACITOR-FXD .1UF +-20% 50VDC CER | 04222 | SA305C104MAA |
| A18C36 | 0160-4571 | 8 | | CAPACITOR-FXD .1UF +80-20% 50VDC CER | 04222 | SA105E104ZAA |
| A18C37 | 0160-4571 | 8 | | CAPACITOR-FXD .1UF +80-20% 50VDC CER | 04222 | SA105E104ZAA |
| A18C38 | 0160-4571 | 8 | | CAPACITOR-FXD .1UF +80-20% 50VDC CER | 04222 | SA105E104ZAA |
| A18C39 | 0160-4557 | 0 | | CAPACITOR-FXD .1UF +-20% 50VDC CER | 04222 | SA305C104MAA |
| A18C41 | 0160-4571 | 8 | | CAPACITOR-FXD .1UF +80-20% 50VDC CER | 04222 | SA105E104ZAA |
| A18C42 | 0160-4571 | 8 | | CAPACITOR-FXD .1UF +80-20% 50VDC CER | 04222 | SA105E104ZAA |
| A18C43 | 0160-4557 | 0 | | CAPACITOR-FXD .1UF +-20% 50VDC CER | 04222 | SA305C104MAA |
| A18C44 | 0140-0198 | 5 | 1 | CAPACITOR-FXD 200PF +-5% 300VDC MICA | 09023 | CD15FD201J03 |
| A18C46 | 0160-4571 | 8 | | CAPACITOR-FXD .1UF +80-20% 50VDC CER | 04222 | SA105E104ZAA |
| A18C47 | 0160-4571 | 8 | | CAPACITOR-FXD .1UF +80-20% 50VDC CER | 04222 | SA105E104ZAA |
| A18C48 | 0160-4571 | 8 | | CAPACITOR-FXD .1UF +80-20% 50VDC CER | 04222 | SA105E104ZAA |
| A18C49 | 0160-4571 | 8 | | CAPACITOR-FXD .1UF +80-20% 50VDC CER | 04222 | SA105E104ZAA |
| A18C50 | 0160-4571 | 8 | | CAPACITOR-FXD .1UF +80-20% 50VDC CER | 04222 | SA105E104ZAA |
| A18C51 | 0160-4571 | 8 | | CAPACITOR-FXD .1UF +80-20% 50VDC CER | 04222 | SA105E104ZAA |
| A18C52 | 0160-4571 | 8 | | CAPACITOR-FXD .1UF +80-20% 50VDC CER | 04222 | SA105E104ZAA |
| A18C53 | 0160-4557 | 0 | | CAPACITOR-FXD .1UF +-20% 50VDC CER | 04222 | SA305C104MAA |
| A18C54 | 0160-4571 | 8 | | CAPACITOR-FXD .1UF +80-20% 50VDC CER | 04222 | SA105E104ZAA |
| A18C55 | 0160-5302 | 5 | 1 | CAPACITOR-FXD 6.8PF +-10% 200VDC CER | 04222 | SA102A6R8DAA |
| A18C56 | 0160-4571 | 8 | | CAPACITOR-FXD .1UF +80-20% 50VDC CER | 04222 | SA105E104ZAA |
| A18C57 | 0160-4571 | 8 | | CAPACITOR-FXD .1UF +80-20% 50VDC CER | 04222 | SA105E104ZAA |
| A18C58 | 0160-4571 | 8 | | CAPACITOR-FXD .1UF +80-20% 50VDC CER | 04222 | SA105E104ZAA |
| A18C59 | 0160-4571 | 8 | | CAPACITOR-FXD .1UF +80-20% 50VDC CER | 04222 | SA105E104ZAA |
| A18C60 | 0160-4571 | 8 | | CAPACITOR-FXD .1UF +80-20% 50VDC CER | 04222 | SA105E104ZAA |
| A18C61 | 0160-4571 | 8 | | CAPACITOR-FXD .1UF +80-20% 50VDC CER | 04222 | SA105E104ZAA |
| A18C62 | 0160-4571 | 8 | | CAPACITOR-FXD .1UF +80-20% 50VDC CER | 04222 | SA105E104ZAA |
| A18C63 | 0160-4571 | 8 | | CAPACITOR-FXD .1UF +80-20% 50VDC CER | 04222 | SA105E104ZAA |
| A18C64 | 0160-4571 | 8 | | CAPACITOR-FXD .1UF +80-20% 50VDC CER | 04222 | SA105E104ZAA |
| A18C65 | 0160-4571 | 8 | | CAPACITOR-FXD .1UF +80-20% 50VDC CER | 04222 | SA105E104ZAA |
| A18C66 | 0160-4571 | 8 | | CAPACITOR-FXD .1UF +80-20% 50VDC CER | 04222 | SA105E104ZAA |
| A18C67 | 0160-4571 | 8 | | CAPACITOR-FXD .1UF +80-20% 50VDC CER | 04222 | SA105E104ZAA |
| A18C68 | 0160-4571 | 8 | | CAPACITOR-FXD .1UF +80-20% 50VDC CER | 04222 | SA105E104ZAA |
| A18C69 | 0160-4571 | 8 | | CAPACITOR-FXD .1UF +80-20% 50VDC CER | 04222 | SA105E104ZAA |
| A18C70 | 0160-4571 | 8 | | CAPACITOR-FXD .1UF +80-20% 50VDC CER | 04222 | SA105E104ZAA |
| A18C71 | 0160-4571 | 8 | | CAPACITOR-FXD .1UF +80-20% 50VDC CER | 04222 | SA105E104ZAA |
| A18C72 | 0160-4571 | 8 | | CAPACITOR-FXD .1UF +80-20% 50VDC CER | 04222 | SA105E104ZAA |
| A18C73 | 0160-4571 | 8 | | CAPACITOR-FXD .1UF +80-20% 50VDC CER | 04222 | SA105E104ZAA |
| A18C74 | 0160-4571 | 8 | | CAPACITOR-FXD .1UF +80-20% 50VDC CER | 04222 | SA105E104ZAA |
| A18C75 | 0160-4571 | 8 | | CAPACITOR-FXD .1UF +80-20% 50VDC CER | 04222 | SA105E104ZAA |
| A18C76 | 0160-4571 | 8 | | CAPACITOR-FXD .1UF +80-20% 50VDC CER | 04222 | SA105E104ZAA |

See introduction to this section for ordering information
* Indicates one of several possible values installed

# Table 9-3. Replaceable Parts

| Reference Designation | HP Part Number | C D | Qty. | Description | Mfr. Code | Mfr. Part Number |
|---|---|---|---|---|---|---|
| A18C77 | 0160-4571 | 8 | | CAPACITOR-FXD .1UF +80-20% 50VDC CER | 04222 | SA105E104ZAA |
| A18C78 | 0160-4571 | 8 | | CAPACITOR-FXD .1UF +80-20% 50VDC CER | 04222 | SA105E104ZAA |
| A18C79 | 0160-4571 | 8 | | CAPACITOR-FXD .1UF +80-20% 50VDC CER | 04222 | SA105E104ZAA |
| A18C80 | 0160-4571 | 8 | | CAPACITOR-FXD .1UF +80-20% 50VDC CER | 04222 | SA105E104ZAA |
| A18C81 | 0160-4571 | 8 | | CAPACITOR-FXD .1UF +80-20% 50VDC CER | 04222 | SA105E104ZAA |
| A18C82 | 0160-6509 | 6 | 1 | C-F .1UF --% 100V CERMLr | 28480 | RPE122-977Z5U104Z100V |
| A18C83 | 0121-0105 | 4 | 1 | CAPACITOR-V TRMR-CER 9-35PF 200V PC-MTG | 52763 | 304324 9/35PF N650 |
| A18C84 | 0160-4571 | 8 | | CAPACITOR-FXD .1UF +80-20% 50VDC CER | 04222 | SA105E104ZAA |
| A18CR1 | 1901-0376 | 6 | 7 | DIODE-GEN PRP 35V 50MA DO-35 | 9N171 | |
| A18CR2 | 1901-0376 | 6 | | DIODE-GEN PRP 35V 50MA DO-35 | 9N171 | |
| A18CR3 | 1901-0376 | 6 | | DIODE-GEN PRP 35V 50MA DO-35 | 9N171 | |
| A18CR4 | 1901-0376 | 6 | | DIODE-GEN PRP 35V 50MA DO-35 | 9N171 | |
| A18CR5 | 1901-0376 | 6 | | DIODE-GEN PRP 35V 50MA DO-35 | 9N171 | |
| A18CR6 | 1901-0376 | 6 | | DIODE-GEN PRP 35V 50MA DO-35 | 9N171 | |
| A18CR7 | 1901-0376 | 6 | | DIODE-GEN PRP 35V 50MA DO-35 | 9N171 | |
| A18CR8 | 1902-3149 | 9 | 1 | DIODE-ZNR 9.09V 5% DO-35 PD=.4W | 04713 | |
| A18CR9 | 1901-0518 | 8 | 2 | DIODE-SCHOTTKY SM SIG | 28480 | 1901-0518 |
| A18CR10 | 1901-0518 | 8 | | DIODE-SCHOTTKY SM SIG | 28480 | 1901-0518 |
| A18CR11 | 1901-0050 | 3 | 4 | DIODE-SWITCHING 80V 200MA 2NS DO-35 | 9N171 | |
| A18CR12 | 1901-0050 | 3 | | DIODE-SWITCHING 80V 200MA 2NS DO-35 | 9N171 | |
| A18CR13 | 1901-0050 | 3 | | DIODE-SWITCHING 80V 200MA 2NS DO-35 | 9N171 | |
| A18CR14 | 1901-0050 | 3 | | DIODE-SWITCHING 80V 200MA 2NS DO-35 | 9N171 | |
| A18J1 | 1251-4822 | 6 | 2 | CONN-POST TYPE .100-PIN-SPCG 3-CONT | 27264 | 22-03-2031 |
| A18J2 | 1251-4822 | 6 | | CONN-POST TYPE .100-PIN-SPCG 3-CONT | 27264 | 22-03-2031 |
| A18L1 | 9140-0748 | 0 | 3 | INDUCTOR 250UH 25% .25DX.5LG Q=3 | 24226 | CA-253-5 |
| A18L2 | 9140-0748 | 0 | | INDUCTOR 250UH 25% .25DX.5LG Q=3 | 24226 | CA-253-5 |
| A18L3 | 9140-0748 | 0 | | INDUCTOR 250UH 25% .25DX.5LG Q=3 | 24226 | CA-253-5 |
| A18L4 | 9140-0447 | 6 | 1 | INDUCTOR 2MH 10% Q=250 | 91637 | IPE-1231-16 |
| A18L5 | 9140-0289 | 4 | 1 | COIL-VAR 23UH-27UH Q=200 PC-MTG | 91637 | IPE-1331-15 |
| A18L6 | 9100-0543 | 9 | 1 | COIL-VAR 900UH-1.1MH Q=112 PC-MTG | 55940 | Q2-1000 |
| A18Q1 | 1854-0071 | 7 | 5 | TRANSISTOR NPN SI PD=300MW FT=200MHZ | 13606 | |
| A18Q2 | 1853-0010 | 2 | 1 | TRANSISTOR PNP SI TO-18 PD=360MW | 04713 | |
| A18Q3 | 1854-0071 | 7 | | TRANSISTOR NPN SI PD=300MW FT=200MHZ | 13606 | |
| A18Q4 | 1854-0071 | 7 | | TRANSISTOR NPN SI PD=300MW FT=200MHZ | 13606 | |
| A18Q5 | 1854-0071 | 7 | | TRANSISTOR NPN SI PD=300MW FT=200MHZ | 13606 | |
| A18Q6 | 1854-0071 | 7 | | TRANSISTOR NPN SI PD=300MW FT=200MHZ | 13606 | |
| A18R1 | 0699-0164 | 8 | 1 | RESISTOR 738.5 .1% .125W F TC=0+-25 | 19701 | 5033R |
| A18R2 | 0699-0163 | 7 | 1 | RESISTOR 466 .1% .125W F TC=0+-25 | 19701 | 5033R |
| A18R3 | 0698-8499 | 6 | 1 | RESISTOR 294 .1% .125W F TC=0+-25 | 19701 | 5033R |
| A18R4 | 0699-0162 | 6 | 1 | RESISTOR 502.7 .1% .125W F TC=0+-25 | 19701 | 5033R |
| A18R5 | 0757-0421 | 4 | 1 | RESISTOR 825 1% .125W F TC=0+-100 | 19701 | SFR25H |
| A18R7 | 0757-0426 | 9 | 1 | RESISTOR 1.3K 1% .125W F TC=0+-100 | 19701 | SFR25H |
| A18R8 | 0683-1015 | 7 | 34 | RESISTOR 100 5% .25W CF TC=0-400 | 77902 | R-25J |
| A18R9 | 0683-1015 | 7 | | RESISTOR 100 5% .25W CF TC=0-400 | 77902 | R-25J |
| A18R10 | 0683-2035 | 3 | 8 | RESISTOR 20K 5% .25W CF TC=0-400 | 77902 | R-25J |
| A18R11 | 0683-2035 | 3 | | RESISTOR 20K 5% .25W CF TC=0-400 | 77902 | R-25J |
| A18R12 | 0698-3518 | 0 | 1 | RESISTOR 7.32K 1% .125W F TC=0+-100 | 19701 | SFR25H |
| A18R13 | 0757-0279 | 0 | 1 | RESISTOR 3.16K 1% .125W F TC=0+-100 | 19701 | SFR25H |
| A18R14 | 0757-0416 | 7 | 1 | RESISTOR 511 1% .125W F TC=0+-100 | 19701 | SFR25H |
| A18R15 | 2100-2497 | 9 | 1 | RESISTOR-TRMR 2K 10% C TOP-ADJ 1-TRN | 73138 | 82PR2K |
| A18R16 | 0757-0283 | 6 | 1 | RESISTOR 2K 1% .125W F TC=0+-100 | 19701 | SFR25H |
| A18R17 | 0683-3325 | 6 | 1 | RESISTOR 3.3K 5% .25W CF TC=0-400 | 77902 | R-25J |
| A18R18 | 0683-1015 | 7 | | RESISTOR 100 5% .25W CF TC=0-400 | 77902 | R-25J |
| A18R19 | 0683-1015 | 7 | | RESISTOR 100 5% .25W CF TC=0-400 | 77902 | R-25J |
| A18R20 | 0698-4393 | 1 | 1 | RESISTOR 73.2 1% .125W F TC=0+-100 | 91637 | CMF-55-1, T-1 |
| A18R21 | 0698-3439 | 4 | 1 | RESISTOR 178 1% .125W F TC=0+-100 | 19701 | SFR25H |
| A18R24 | 0757-0442 | 9 | 1 | RESISTOR 10K 1% .125W F TC=0+-100 | 19701 | SFR25H |
| A18R25 | 0757-0281 | 4 | 1 | RESISTOR 2.74K 1% .125W F TC=0+-100 | 19701 | SFR25H |
| A18R26 | 0698-3150 | 6 | 1 | RESISTOR 2.37K 1% .125W F TC=0+-100 | 19701 | SFR25H |
| A18R27 | 0757-0428 | 1 | 1 | RESISTOR 1.62K 1% .125W F TC=0+-100 | 19701 | SFR25H |
| A18R28 | 0683-1335 | 4 | 1 | RESISTOR 13K 5% .25W CF TC=0-400 | 77902 | R-25J |
| A18R29 | 0683-4325 | 8 | 2 | RESISTOR 4.3K 5% .25W CF TC=0-400 | 77902 | R-25J |
| A18R30 | 0683-2425 | 5 | 2 | RESISTOR 2.4K 5% .25W CF TC=0-400 | 77902 | R-25J |
| A18R31 | 0683-2425 | 5 | | RESISTOR 2.4K 5% .25W CF TC=0-400 | 77902 | R-25J |
| A18R32 | 0683-2035 | 3 | | RESISTOR 20K 5% .25W CF TC=0-400 | 77902 | R-25J |

See introduction to this section for ordering information
* Indicates one of several possible values installed

# Table 9-3. Replaceable Parts

| Reference Designation | HP Part Number | C D | Qty. | Description | Mfr. Code | Mfr. Part Number |
|---|---|---|---|---|---|---|
| A18R33 | 0683-4325 | 8 | | RESISTOR 4.3K 5% .25W CF TC=0-400 | 77902 | R-25J |
| A18R34 | 0683-1225 | 1 | 1 | RESISTOR 1.2K 5% .25W CF TC=0-400 | 77902 | R-25J |
| A18R35 | 0683-3025 | 3 | 1 | RESISTOR 3K 5% .25W CF TC=0-400 | 77902 | R-25J |
| A18R36 | 0683-1015 | 7 | | RESISTOR 100 5% .25W CF TC=0-400 | 77902 | R-25J |
| A18R37 | 0683-1235 | 3 | 1 | RESISTOR 12K 5% .25W CF TC=0-400 | 77902 | R-25J |
| A18R38 | 0698-4506 | 8 | 1 | RESISTOR 73.2K 1% .125W F TC=0+-100 | 91637 | CMF-55-1, T-1 |
| A18R39 | 0698-4492 | 1 | 1 | RESISTOR 32.4K 1% .125W F TC=0+-100 | 91637 | CMF-55-1, T-1 |
| A18R40 | 0698-4471 | 6 | 1 | RESISTOR 7.15K 1% .125W F TC=0+-100 | 91637 | CMF-55-1, T-1 |
| A18R41 | 0698-4431 | 8 | 1 | RESISTOR 2.05K 1% .125W F TC=0+-100 | 91637 | CMF-55-1, T-1 |
| A18R42 | 0698-4453 | 4 | 1 | RESISTOR 402 1% .125W F TC=0+-100 | 91637 | CMF-55-1, T-1 |
| A18R43 | 0683-2025 | 1 | 3 | RESISTOR 2K 5% .25W CF TC=0-400 | 77902 | R-25J |
| A18R44 | 0683-2025 | 1 | | RESISTOR 2K 5% .25W CF TC=0-400 | 77902 | R-25J |
| A18R45 | 0683-3625 | 9 | 1 | RESISTOR 3.6K 5% .25W CF TC=0-400 | 77902 | R-25J |
| A18R46 | 0683-6225 | 1 | 1 | RESISTOR 6.2K 5% .25W CF TC=0-400 | 77902 | R-25J |
| A18R47 | 0683-1045 | 3 | 6 | RESISTOR 100K 5% .25W CF TC=0-400 | 77902 | R-25J |
| A18R48 | 0683-1045 | 3 | | RESISTOR 100K 5% .25W CF TC=0-400 | 77902 | R-25J |
| A18R49 | 0683-1045 | 3 | | RESISTOR 100K 5% .25W CF TC=0-400 | 77902 | R-25J |
| A18R50 | 0683-1045 | 3 | | RESISTOR 100K 5% .25W CF TC=0-400 | 77902 | R-25J |
| A18R51 | 0683-1015 | 7 | | RESISTOR 100 5% .25W CF TC=0-400 | 77902 | R-25J |
| A18R52* | 0698-4381 | 7 | 0 | RESISTOR 48.7 1% .125W F TC=0+-100 | 91637 | CMF-55-1, T-1 |
| A18R52* | 0698-4387 | 3 | 0 | RESISTOR 60.4 1% .125W F TC=0+-100 | 91637 | CMF-55-1, T-1 |
| A18R52* | 0698-4393 | 1 | | RESISTOR 73.2 1% .125W F TC=0+-100 | 91637 | CMF-55-1, T-1 |
| A18R52* | 0757-0386 | 0 | 0 | RESISTOR 24.3 1% .125W F TC=0+-100 | 19701 | SFR25H |
| A18R52* | 0757-0390 | 6 | 0 | RESISTOR 36.5 1% .125W F TC=0+-100 | 19701 | SFR25H |
| A18R53 | 0683-2035 | 3 | | RESISTOR 20K 5% .25W CF TC=0-400 | 77902 | R-25J |
| A18R54 | 0683-4705 | 8 | 1 | RESISTOR 47 5% .25W CF TC=0-400 | 77902 | R-25J |
| A18R55 | 0683-1035 | 1 | 2 | RESISTOR 10K 5% .25W CF TC=0-400 | 77902 | R-25J |
| A18R56 | 0683-1015 | 7 | | RESISTOR 100 5% .25W CF TC=0-400 | 77902 | R-25J |
| A18R57 | 0683-1015 | 7 | | RESISTOR 100 5% .25W CF TC=0-400 | 77902 | R-25J |
| A18R58 | 0683-1015 | 7 | | RESISTOR 100 5% .25W CF TC=0-400 | 77902 | R-25J |
| A18R59 | 0698-3492 | 9 | 1 | RESISTOR 2.67K 1% .125W F TC=0+-100 | 19701 | SFR25H |
| A18R60 | 0683-1045 | 3 | | RESISTOR 100K 5% .25W CF TC=0-400 | 77902 | R-25J |
| A18R61 | 0683-5125 | 8 | 2 | RESISTOR 5.1K 5% .25W CF TC=0-400 | 77902 | R-25J |
| A18R62 | 0683-1015 | 7 | | RESISTOR 100 5% .25W CF TC=0-400 | 77902 | R-25J |
| A18R63 | 0683-1015 | 7 | | RESISTOR 100 5% .25W CF TC=0-400 | 77902 | R-25J |
| A18R64 | 0698-4446 | 5 | 3 | RESISTOR 267 1% .125W F TC=0+-100 | 91637 | CMF-55-1, T-1 |
| A18R65 | 2100-3349 | 2 | 3 | RESISTOR-TRMR 100 10% C SIDE-ADJ 1-TRN | 32997 | 3386X-Y46-101 |
| A18R66 | 0698-4427 | 2 | 3 | RESISTOR 1.65K 1% .125W F TC=0+-100 | 91637 | CMF-55-1, T-1 |
| A18R67 | 0683-2035 | 3 | | RESISTOR 20K 5% .25W CF TC=0-400 | 77902 | R-25J |
| A18R68 | 0683-1015 | 7 | | RESISTOR 100 5% .25W CF TC=0-400 | 77902 | R-25J |
| A18R69 | 0683-1015 | 7 | | RESISTOR 100 5% .25W CF TC=0-400 | 77902 | R-25J |
| A18R70 | 0698-4446 | 5 | | RESISTOR 267 1% .125W F TC=0+-100 | 91637 | CMF-55-1, T-1 |
| A18R71 | 2100-3349 | 2 | | RESISTOR-TRMR 100 10% C SIDE-ADJ 1-TRN | 32997 | 3386X-Y46-101 |
| A18R72 | 0698-4427 | 2 | | RESISTOR 1.65K 1% .125W F TC=0+-100 | 91637 | CMF-55-1, T-1 |
| A18R73 | 0683-2035 | 3 | | RESISTOR 20K 5% .25W CF TC=0-400 | 77902 | R-25J |
| A18R74 | 0683-1015 | 7 | | RESISTOR 100 5% .25W CF TC=0-400 | 77902 | R-25J |
| A18R75 | 0683-1015 | 7 | | RESISTOR 100 5% .25W CF TC=0-400 | 77902 | R-25J |
| A18R76 | 0698-4446 | 5 | | RESISTOR 267 1% .125W F TC=0+-100 | 91637 | CMF-55-1, T-1 |
| A18R77 | 2100-3349 | 2 | | RESISTOR-TRMR 100 10% C SIDE-ADJ 1-TRN | 32997 | 3386X-Y46-101 |
| A18R78 | 0698-4427 | 2 | | RESISTOR 1.65K 1% .125W F TC=0+-100 | 91637 | CMF-55-1, T-1 |
| A18R79 | 0683-2035 | 3 | | RESISTOR 20K 5% .25W CF TC=0-400 | 77902 | R-25J |
| A18R80 | 0683-1015 | 7 | | RESISTOR 100 5% .25W CF TC=0-400 | 77902 | R-25J |
| A18R81 | 0683-1015 | 7 | | RESISTOR 100 5% .25W CF TC=0-400 | 77902 | R-25J |
| A18R82 | 0683-2035 | 3 | | RESISTOR 20K 5% .25W CF TC=0-400 | 77902 | R-25J |
| A18R83 | 0683-2025 | 1 | | RESISTOR 2K 5% .25W CF TC=0-400 | 77902 | R-25J |
| A18R84 | 0683-1025 | 9 | 17 | RESISTOR 1K 5% .25W CF TC=0-400 | 77902 | R-25J |
| A18R85 | 0698-4484 | 1 | 1 | RESISTOR 19.1K 1% .125W F TC=0+-100 | 91637 | CMF-55-1, T-1 |
| A18R86 | 0683-1025 | 9 | | RESISTOR 1K 5% .25W CF TC=0-400 | 77902 | R-25J |
| A18R87 | 0683-1025 | 9 | | RESISTOR 1K 5% .25W CF TC=0-400 | 77902 | R-25J |
| A18R88 | 0683-1025 | 9 | | RESISTOR 1K 5% .25W CF TC=0-400 | 77902 | R-25J |
| A18R89 | 0683-1025 | 9 | | RESISTOR 1K 5% .25W CF TC=0-400 | 77902 | R-25J |
| A18R90 | 0683-1025 | 9 | | RESISTOR 1K 5% .25W CF TC=0-400 | 77902 | R-25J |
| A18R91 | 0683-1025 | 9 | | RESISTOR 1K 5% .25W CF TC=0-400 | 77902 | R-25J |
| A18R92 | 0683-1025 | 9 | | RESISTOR 1K 5% .25W CF TC=0-400 | 77902 | R-25J |
| A18R93 | 0683-1025 | 9 | | RESISTOR 1K 5% .25W CF TC=0-400 | 77902 | R-25J |

See introduction to this section for ordering information
* Indicates one of several possible values installed

# Table 9-3. Replaceable Parts

| Reference Designation | HP Part Number | C D | Qty. | Description | Mfr. Code | Mfr. Part Number |
|---|---|---|---|---|---|---|
| A18R94 | 0683-1025 | 9 | | RESISTOR 1K 5% .25W CF TC=0-400 | 77902 | R-25J |
| A18R95 | 0683-1025 | 9 | | RESISTOR 1K 5% .25W CF TC=0-400 | 77902 | R-25J |
| A18R96 | 0683-1015 | 7 | | RESISTOR 100 5% .25W CF TC=0-400 | 77902 | R-25J |
| A18R97 | 0683-1015 | 7 | | RESISTOR 100 5% .25W CF TC=0-400 | 77902 | R-25J |
| A18R98 | 0683-1045 | 3 | | RESISTOR 100K 5% .25W CF TC=0-400 | 77902 | R-25J |
| A18R99 | 0683-5125 | 8 | | RESISTOR 5.1K 5% .25W CF TC=0-400 | 77902 | R-25J |
| A18R100 | 0683-1015 | 7 | | RESISTOR 100 5% .25W CF TC=0-400 | 77902 | R-25J |
| A18R101 | 0683-1025 | 9 | | RESISTOR 1K 5% .25W CF TC=0-400 | 77902 | R-25J |
| A18R102 | 0683-1025 | 9 | | RESISTOR 1K 5% .25W CF TC=0-400 | 77902 | R-25J |
| A18R103 | 0683-1025 | 9 | | RESISTOR 1K 5% .25W CF TC=0-400 | 77902 | R-25J |
| A18R104 | 0683-1025 | 9 | | RESISTOR 1K 5% .25W CF TC=0-400 | 77902 | R-25J |
| A18R105 | 0683-1025 | 9 | | RESISTOR 1K 5% .25W CF TC=0-400 | 77902 | R-25J |
| A18R106 | 0683-1025 | 9 | | RESISTOR 1K 5% .25W CF TC=0-400 | 77902 | R-25J |
| A18R107 | 0757-0415 | 6 | 1 | RESISTOR 475 1% .125W F TC=0+-100 | 19701 | SFR25H |
| A18R108 | 0683-1035 | 1 | | RESISTOR 10K 5% .25W CF TC=0-400 | 77902 | R-25J |
| A18R109 | 0683-1015 | 7 | | RESISTOR 100 5% .25W CF TC=0-400 | 77902 | R-25J |
| A18R110 | 0683-1015 | 7 | | RESISTOR 100 5% .25W CF TC=0-400 | 77902 | R-25J |
| A18R111 | 0683-1015 | 7 | | RESISTOR 100 5% .25W CF TC=0-400 | 77902 | R-25J |
| A18R112 | 0683-1015 | 7 | | RESISTOR 100 5% .25W CF TC=0-400 | 77902 | R-25J |
| A18R113 | 0683-1015 | 7 | | RESISTOR 100 5% .25W CF TC=0-400 | 77902 | R-25J |
| A18R114 | 0683-1015 | 7 | | RESISTOR 100 5% .25W CF TC=0-400 | 77902 | R-25J |
| A18R115 | 0683-1015 | 7 | | RESISTOR 100 5% .25W CF TC=0-400 | 77902 | R-25J |
| A18R116 | 0683-1015 | 7 | | RESISTOR 100 5% .25W CF TC=0-400 | 77902 | R-25J |
| A18R117 | 0683-1015 | 7 | | RESISTOR 100 5% .25W CF TC=0-400 | 77902 | R-25J |
| A18R118 | 0683-1015 | 7 | | RESISTOR 100 5% .25W CF TC=0-400 | 77902 | R-25J |
| A18R119 | 0683-1015 | 7 | | RESISTOR 100 5% .25W CF TC=0-400 | 77902 | R-25J |
| A18R120 | 0683-1015 | 7 | | RESISTOR 100 5% .25W CF TC=0-400 | 77902 | R-25J |
| A18R121 | 0683-1015 | 7 | | RESISTOR 100 5% .25W CF TC=0-400 | 77902 | R-25J |
| A18R122 | 0683-1015 | 7 | | RESISTOR 100 5% .25W CF TC=0-400 | 77902 | R-25J |
| A18RT1 | 0837-0086 | 7 | 3 | THERMISTOR DISC 200-OHM TC=-4.4%/C-DEG | 15801 | KB22J24 |
| A18RT2 | 0837-0086 | 7 | | THERMISTOR DISC 200-OHM TC=-4.4%/C-DEG | 15801 | KB22J24 |
| A18RT3 | 0837-0086 | 7 | | THERMISTOR DISC 200-OHM TC=-4.4%/C-DEG | 15801 | KB22J24 |
| A18T1 | 9100-3262 | 5 | 1 | TRANSFORMER TRANSFORMER; TOROIDAL PULSE | 91637 | ITU-1229-3 |
| A18TP1 | 1251-0600 | 0 | 11 | CONNECTOR-SGL CONT PIN 1.14-MM-BSC-SZ SQ27264 | 27264 | 16-06-0034 |
| A18TP2 | 1251-0600 | 0 | | CONNECTOR-SGL CONT PIN 1.14-MM-BSC-SZ SQ27264 | 27264 | 16-06-0034 |
| A18TP3 | 1251-0600 | 0 | | CONNECTOR-SGL CONT PIN 1.14-MM-BSC-SZ SQ27264 | 27264 | 16-06-0034 |
| A18TP4 | 1251-0600 | 0 | | CONNECTOR-SGL CONT PIN 1.14-MM-BSC-SZ SQ27264 | 27264 | 16-06-0034 |
| A18TP5 | 1251-0600 | 0 | | CONNECTOR-SGL CONT PIN 1.14-MM-BSC-SZ SQ27264 | 27264 | 16-06-0034 |
| A18TP6 | 1251-0600 | 0 | | CONNECTOR-SGL CONT PIN 1.14-MM-BSC-SZ SQ27264 | 27264 | 16-06-0034 |
| A18TP7 | 1251-0600 | 0 | | CONNECTOR-SGL CONT PIN 1.14-MM-BSC-SZ SQ27264 | 27264 | 16-06-0034 |
| A18TP8 | 1251-0600 | 0 | | CONNECTOR-SGL CONT PIN 1.14-MM-BSC-SZ SQ27264 | 27264 | 16-06-0034 |
| A18TP9 | 1251-0600 | 0 | | CONNECTOR-SGL CONT PIN 1.14-MM-BSC-SZ SQ27264 | 27264 | 16-06-0034 |
| A18TP10 | 1251-0600 | 0 | | CONNECTOR-SGL CONT PIN 1.14-MM-BSC-SZ SQ27264 | 27264 | 16-06-0034 |
| A18TP11 | 1251-0600 | 0 | | CONNECTOR-SGL CONT PIN 1.14-MM-BSC-SZ SQ27264 | 27264 | 16-06-0034 |
| A18U1 | 1826-0846 | 5 | 6 | ANALOG SWITCH 4 SPST 16 -CBRZ/SDR | 27014 | |
| A18U2 | 1826-0089 | 8 | 1 | IC OP AMP WB TO-99 PKG | 34371 | |
| A18U3 | 1826-0846 | 5 | | ANALOG SWITCH 4 SPST 16 -CBRZ/SDR | 27014 | |
| A18U4 | 1826-0846 | 5 | | ANALOG SWITCH 4 SPST 16 -CBRZ/SDR | 27014 | |
| A18U5 | 1826-0846 | 5 | | ANALOG SWITCH 4 SPST 16 -CBRZ/SDR | 27014 | |
| A18U6 | 1826-0606 | 5 | 1 | ANALOG SWITCH 4 SPST 16 -CERDIP | 17856 | |
| A18U7 | 1826-0109 | 3 | 3 | IC OP AMP WB TO-99 PKG | 34371 | |
| A18U8 | 1826-0109 | 3 | | IC OP AMP WB TO-99 PKG | 34371 | |
| A18U9 | 1826-0109 | 3 | | IC OP AMP WB TO-99 PKG | 34371 | |
| A18U10 | 1826-0846 | 5 | | ANALOG SWITCH 4 SPST 16 -CBRZ/SDR | 27014 | |
| A18U11 | 1826-0846 | 5 | | ANALOG SWITCH 4 SPST 16 -CBRZ/SDR | 27014 | |
| A18U12 | 1820-1196 | 8 | 4 | IC FF TTL LS D-TYPE POS-EDGE-TRIG COM | 01295 | |
| A18U13 | 1820-1196 | 8 | | IC FF TTL LS D-TYPE POS-EDGE-TRIG COM | 01295 | |
| A18U14 | 1820-1196 | 8 | | IC FF TTL LS D-TYPE POS-EDGE-TRIG COM | 01295 | |
| A18U15 | 1820-1196 | 8 | | IC FF TTL LS D-TYPE POS-EDGE-TRIG COM | 01295 | |
| A18U16 | 1820-1195 | 7 | 1 | IC FF TTL LS D-TYPE POS-EDGE-TRIG COM | 01295 | |
| A18U17 | 1820-1216 | 3 | 1 | IC DCDR TTL LS 3-TO-8-LINE 3-INP | 01295 | |
| A18X1 | 1258-0141 | 8 | 2 | CON-JUMPER REM .025P | 22526 | 65474-004 |
| A18X2 | 1258-0141 | 8 | | CON-JUMPER REM .025P | 22526 | 65474-004 |
| | 1480-0116 | 8 | 2 | PIN-GRV .062-IN-DIA .25-IN-LG STL | 73957 | GP24-063 X 250-14 |
| | 1400-0249 | 0 | 2 | CABLE TIE .062-.625-DIA .091-WD NYL | 56501 | TY-23M-8 |

See introduction to this section for ordering information
* Indicates one of several possible values installed

# Table 9-3. Replaceable Parts

| Reference Designation | HP Part Number | C D | Qty. | Description | Mfr. Code | Mfr. Part Number |
|---|---|---|---|---|---|---|
| | 6960-0080 | 8 | 1 | PLUG-HOLE FL-HD FOR .185-D-HOLE TFE | 98291 | 119-0052-00-0-009 |
| | 0403-0211 | 1 | 1 | MOLD XTR-PC BD BRN .062TKBD | 28480 | |
| | 0403-0218 | 8 | 1 | MOLD XTR-PC BD GRA .062TKBD | 28480 | |
| | 7121-4611 | 2 | 1 | LABEL-INFORMATION .15-IN-WD .6-IN-LG | 28480 | L01003 |
| | 1205-0011 | 0 | 4 | HEAT SINK TO-5/TO-39-CS | 98978 | TXBF-032-025B |
| | 1205-0011 | 0 | | HEAT SINK TO-5/TO-39-CS | 98978 | TXBF-032-025B |
| | 1205-0011 | 0 | | HEAT SINK TO-5/TO-39-CS | 98978 | TXBF-032-025B |
| | 1205-0011 | 0 | | HEAT SINK TO-5/TO-39-CS | 98978 | TXBF-032-025B |
| **A19** | **03585-66519** | **2** | **1** | **IF FILTER NO. 2 PC BD ASSEMBLY** | **28480** | **03585-66519** |
| A19C1 | 0180-1974 | 1 | 2 | CAPACITOR-FXD 10UF+-10% 35VDC TA | 13606 | 150D106X9035R2-DYS |
| A19C2 | 0180-1974 | 1 | | CAPACITOR-FXD 10UF+-10% 35VDC TA | 13606 | 150D106X9035R2-DYS |
| A19C3 | 0180-0229 | 7 | 1 | CAPACITOR-FXD 33UF+-10% 10VDC TA | 13606 | 150D336X9010B2-DYS |
| A19C4 | 0160-4571 | 8 | 44 | CAPACITOR-FXD .1UF +80-20% 50VDC CER | 04222 | SA105E104ZAA |
| A19C5 | 0160-4557 | 0 | 7 | CAPACITOR-FXD .1UF +-20% 50VDC CER | 04222 | SA305C104MAA |
| A19C6 | 0160-4557 | 0 | | CAPACITOR-FXD .1UF +-20% 50VDC CER | 04222 | SA305C104MAA |
| A19C8 | 0160-4571 | 8 | | CAPACITOR-FXD .1UF +80-20% 50VDC CER | 04222 | SA105E104ZAA |
| A19C9 | 0160-4571 | 8 | | CAPACITOR-FXD .1UF +80-20% 50VDC CER | 04222 | SA105E104ZAA |
| A19C10 | 0160-4557 | 0 | | CAPACITOR-FXD .1UF +-20% 50VDC CER | 04222 | SA305C104MAA |
| A19C11 | 0140-0184 | 9 | 2 | CAPACITOR-FXD 8200PF +-1% 100VDC MICA | 00853 | |
| A19C12 | 0160-4571 | 8 | | CAPACITOR-FXD .1UF +80-20% 50VDC CER | 04222 | SA105E104ZAA |
| A19C13 | 0160-4571 | 8 | | CAPACITOR-FXD .1UF +80-20% 50VDC CER | 04222 | SA105E104ZAA |
| A19C14 | 0160-4557 | 0 | | CAPACITOR-FXD .1UF +-20% 50VDC CER | 04222 | SA305C104MAA |
| A19C15 | 0140-0184 | 9 | | CAPACITOR-FXD 8200PF +-1% 100VDC MICA | 00853 | |
| A19C16 | 0160-4571 | 8 | | CAPACITOR-FXD .1UF +80-20% 50VDC CER | 04222 | SA105E104ZAA |
| A19C17 | 0160-4557 | 0 | | CAPACITOR-FXD .1UF +-20% 50VDC CER | 04222 | SA305C104MAA |
| A19C18 | 0160-4571 | 8 | | CAPACITOR-FXD .1UF +80-20% 50VDC CER | 04222 | SA105E104ZAA |
| A19C19 | 0160-4571 | 8 | | CAPACITOR-FXD .1UF +80-20% 50VDC CER | 04222 | SA105E104ZAA |
| A19C20 | 0160-4571 | 8 | | CAPACITOR-FXD .1UF +80-20% 50VDC CER | 04222 | SA105E104ZAA |
| A19C21 | 0160-4557 | 0 | | CAPACITOR-FXD .1UF +-20% 50VDC CER | 04222 | SA305C104MAA |
| A19C22 | 0160-4571 | 8 | | CAPACITOR-FXD .1UF +80-20% 50VDC CER | 04222 | SA105E104ZAA |
| A19C23 | 0160-4571 | 8 | | CAPACITOR-FXD .1UF +80-20% 50VDC CER | 04222 | SA105E104ZAA |
| A19C24 | 0160-4571 | 8 | | CAPACITOR-FXD .1UF +80-20% 50VDC CER | 04222 | SA105E104ZAA |
| A19C25 | 0160-4571 | 8 | | CAPACITOR-FXD .1UF +80-20% 50VDC CER | 04222 | SA105E104ZAA |
| A19C26 | 0160-4571 | 8 | | CAPACITOR-FXD .1UF +80-20% 50VDC CER | 04222 | SA105E104ZAA |
| A19C27 | 0160-0182 | 9 | 2 | CAPACITOR-FXD 47PF +-5% 300VDC MICA | 09023 | |
| A19C28 | 0121-0180 | 5 | 2 | CAPACITOR-V TRMR-CER 15-60PF 200V PC-MTG52763 | 52763 | 304324 15/60PF N1500 |
| A19C29* | 0160-2202 | 8 | 0 | CAPACITOR-FXD 75PF +-5% 300VDC MICA | 00853 | |
| A19C29* | 0160-2204 | 0 | 0 | CAPACITOR-FXD 100PF +-5% 300VDC MICA | 00853 | D153F101J |
| A19C29* | 0160-2205 | 1 | 0 | CAPACITOR-FXD 120PF +-5% 300VDC MICA | 00853 | |
| A19C30 | 0121-0059 | 7 | 2 | CAPACITOR-V TRMR-CER 2-8PF 350V PC-MTG | 52763 | 304324 2/8PF NPO |
| A19C31 | 0160-4571 | 8 | | CAPACITOR-FXD .1UF +80-20% 50VDC CER | 04222 | SA105E104ZAA |
| A19C32 | 0160-4571 | 8 | | CAPACITOR-FXD .1UF +80-20% 50VDC CER | 04222 | SA105E104ZAA |
| A19C33 | 0160-4571 | 8 | | CAPACITOR-FXD .1UF +80-20% 50VDC CER | 04222 | SA105E104ZAA |
| A19C34 | 0160-4571 | 8 | | CAPACITOR-FXD .1UF +80-20% 50VDC CER | 04222 | SA105E104ZAA |
| A19C35 | 0160-4571 | 8 | | CAPACITOR-FXD .1UF +80-20% 50VDC CER | 04222 | SA105E104ZAA |
| A19C36 | 0160-4571 | 8 | | CAPACITOR-FXD .1UF +80-20% 50VDC CER | 04222 | SA105E104ZAA |
| A19C37 | 0160-4571 | 8 | | CAPACITOR-FXD .1UF +80-20% 50VDC CER | 04222 | SA105E104ZAA |
| A19C39 | 0121-0180 | 5 | | CAPACITOR-V TRMR-CER 15-60PF 200V PC-MTG52763 | 52763 | 304324 15/60PF N1500 |
| A19C40* | 0160-2202 | 8 | | CAPACITOR-FXD 75PF +-5% 300VDC MICA | 00853 | |
| A19C40* | 0160-2204 | 0 | | CAPACITOR-FXD 100PF +-5% 300VDC MICA | 00853 | D153F101J |
| A19C40* | 0160-2205 | 1 | | CAPACITOR-FXD 120PF +-5% 300VDC MICA | 00853 | |
| A19C41 | 0121-0059 | 7 | | CAPACITOR-V TRMR-CER 2-8PF 350V PC-MTG | 52763 | 304324 2/8PF NPO |
| A19C43 | 0160-4571 | 8 | | CAPACITOR-FXD .1UF +80-20% 50VDC CER | 04222 | SA105E104ZAA |
| A19C44 | 0160-4557 | 0 | | CAPACITOR-FXD .1UF +-20% 50VDC CER | 04222 | SA305C104MAA |
| A19C45 | 0160-4571 | 8 | | CAPACITOR-FXD .1UF +80-20% 50VDC CER | 04222 | SA105E104ZAA |
| A19C46 | 0160-4571 | 8 | | CAPACITOR-FXD .1UF +80-20% 50VDC CER | 04222 | SA105E104ZAA |
| A19C47 | 0160-4571 | 8 | | CAPACITOR-FXD .1UF +80-20% 50VDC CER | 04222 | SA105E104ZAA |
| A19C48 | 0160-4571 | 8 | | CAPACITOR-FXD .1UF +80-20% 50VDC CER | 04222 | SA105E104ZAA |
| A19C49 | 0160-4571 | 8 | | CAPACITOR-FXD .1UF +80-20% 50VDC CER | 04222 | SA105E104ZAA |
| A19C50 | 0160-4571 | 8 | | CAPACITOR-FXD .1UF +80-20% 50VDC CER | 04222 | SA105E104ZAA |
| A19C51 | 0160-4571 | 8 | | CAPACITOR-FXD .1UF +80-20% 50VDC CER | 04222 | SA105E104ZAA |
| A19C52 | 0160-4571 | 8 | | CAPACITOR-FXD .1UF +80-20% 50VDC CER | 04222 | SA105E104ZAA |
| A19C53 | 0160-4571 | 8 | | CAPACITOR-FXD .1UF +80-20% 50VDC CER | 04222 | SA105E104ZAA |
| A19C54 | 0160-4571 | 8 | | CAPACITOR-FXD .1UF +80-20% 50VDC CER | 04222 | SA105E104ZAA |

See introduction to this section for ordering information
* Indicates one of several possible values installed

# Table 9-3. Replaceable Parts

| Reference Designation | HP Part Number | C D | Qty. | Description | Mfr. Code | Mfr. Part Number |
|---|---|---|---|---|---|---|
| A19C55 | 0160-4571 | 8 | | CAPACITOR-FXD .1UF +80-20% 50VDC CER | 04222 | SA105E104ZAA |
| A19C56 | 0160-4571 | 8 | | CAPACITOR-FXD .1UF +80-20% 50VDC CER | 04222 | SA105E104ZAA |
| A19C57 | 0160-4571 | 8 | | CAPACITOR-FXD .1UF +80-20% 50VDC CER | 04222 | SA105E104ZAA |
| A19C58 | 0160-4571 | 8 | | CAPACITOR-FXD .1UF +80-20% 50VDC CER | 04222 | SA105E104ZAA |
| A19C59 | 0160-4571 | 8 | | CAPACITOR-FXD .1UF +80-20% 50VDC CER | 04222 | SA105E104ZAA |
| A19C60 | 0160-4571 | 8 | | CAPACITOR-FXD .1UF +80-20% 50VDC CER | 04222 | SA105E104ZAA |
| A19C61 | 0160-4571 | 8 | | CAPACITOR-FXD .1UF +80-20% 50VDC CER | 04222 | SA105E104ZAA |
| A19C62 | 0160-4571 | 8 | | CAPACITOR-FXD .1UF +80-20% 50VDC CER | 04222 | SA105E104ZAA |
| A19C63 | 0160-4571 | 8 | | CAPACITOR-FXD .1UF +80-20% 50VDC CER | 04222 | SA105E104ZAA |
| A19C64 | 0160-4571 | 8 | | CAPACITOR-FXD .1UF +80-20% 50VDC CER | 04222 | SA105E104ZAA |
| A19C65 | 0160-4571 | 8 | | CAPACITOR-FXD .1UF +80-20% 50VDC CER | 04222 | SA105E104ZAA |
| A19C66 | 0121-0105 | 4 | 2 | CAPACITOR-V TRMR-CER 9-35PF 200V PC-MTG | 52763 | 304324 9/35PF N650 |
| A19C67 | 0121-0105 | 4 | | CAPACITOR-V TRMR-CER 9-35PF 200V PC-MTG | 52763 | 304324 9/35PF N650 |
| A19C98 | 0160-0182 | 9 | | CAPACITOR-FXD 47PF +-5% 300VDC MICA | 09023 | |
| A19C99 | 0160-4571 | 8 | | CAPACITOR-FXD .1UF +80-20% 50VDC CER | 04222 | SA105E104ZAA |
| A19CR1 | 1901-0376 | 6 | 14 | DIODE-GEN PRP 35V 50MA DO-35 | 9N171 | |
| A19CR2 | 1901-0376 | 6 | | DIODE-GEN PRP 35V 50MA DO-35 | 9N171 | |
| A19CR3 | 1901-0376 | 6 | | DIODE-GEN PRP 35V 50MA DO-35 | 9N171 | |
| A19CR4 | 1901-0376 | 6 | | DIODE-GEN PRP 35V 50MA DO-35 | 9N171 | |
| A19CR5 | 1901-0376 | 6 | | DIODE-GEN PRP 35V 50MA DO-35 | 9N171 | |
| A19CR6 | 1901-0376 | 6 | | DIODE-GEN PRP 35V 50MA DO-35 | 9N171 | |
| A19CR7 | 1901-0376 | 6 | | DIODE-GEN PRP 35V 50MA DO-35 | 9N171 | |
| A19CR8 | 1901-0376 | 6 | | DIODE-GEN PRP 35V 50MA DO-35 | 9N171 | |
| A19CR9 | 1901-0376 | 6 | | DIODE-GEN PRP 35V 50MA DO-35 | 9N171 | |
| A19CR10 | 1901-0376 | 6 | | DIODE-GEN PRP 35V 50MA DO-35 | 9N171 | |
| A19CR11 | 1902-3149 | 9 | 1 | DIODE-ZNR 9.09V 5% DO-35 PD=.4W | 04713 | |
| A19CR12 | 1901-0376 | 6 | | DIODE-GEN PRP 35V 50MA DO-35 | 9N171 | |
| A19CR13 | 1901-0376 | 6 | | DIODE-GEN PRP 35V 50MA DO-35 | 9N171 | |
| A19CR14 | 1901-0376 | 6 | | DIODE-GEN PRP 35V 50MA DO-35 | 9N171 | |
| A19CR15 | 1901-0376 | 6 | | DIODE-GEN PRP 35V 50MA DO-35 | 9N171 | |
| A19CR16 | 1901-0518 | 8 | 2 | DIODE-SCHOTTKY SM SIG | 28480 | 1901-0518 |
| A19CR17 | 1901-0518 | 8 | | DIODE-SCHOTTKY SM SIG | 28480 | 1901-0518 |
| A19J1 | 1251-4822 | 6 | 4 | CONN-POST TYPE .100-PIN-SPCG 3-CONT | 27264 | 22-03-2031 |
| A19J1A | 1258-0141 | 8 | 4 | CON-JUMPER REM .025P | 22526 | 65474-004 |
| A19J2 | 1251-4822 | 6 | | CONN-POST TYPE .100-PIN-SPCG 3-CONT | 27264 | 22-03-2031 |
| A19J2A | 1258-0141 | 8 | | CON-JUMPER REM .025P | 22526 | 65474-004 |
| A19J3 | 1251-4822 | 6 | | CONN-POST TYPE .100-PIN-SPCG 3-CONT | 27264 | 22-03-2031 |
| A19J3A | 1258-0141 | 8 | | CON-JUMPER REM .025P | 22526 | 65474-004 |
| A19J4 | 1251-4822 | 6 | | CONN-POST TYPE .100-PIN-SPCG 3-CONT | 27264 | 22-03-2031 |
| A19J4A | 1258-0141 | 8 | | CON-JUMPER REM .025P | 22526 | 65474-004 |
| A19L1 | 9140-0748 | 0 | 3 | INDUCTOR 250UH 25% .25DX.5LG Q=3 | 24226 | CA-253-5 |
| A19L2 | 9140-0748 | 0 | | INDUCTOR 250UH 25% .25DX.5LG Q=3 | 24226 | CA-253-5 |
| A19L3 | 9140-0748 | 0 | | INDUCTOR 250UH 25% .25DX.5LG Q=3 | 24226 | CA-253-5 |
| A19L4 | 9140-0289 | 4 | 2 | COIL-VAR 23UH-27UH Q=200 PC-MTG | 91637 | IPE-1331-15 |
| A19L5 | 9140-0289 | 4 | | COIL-VAR 23UH-27UH Q=200 PC-MTG | 91637 | IPE-1331-15 |
| A19L6 | 9140-0447 | 6 | 2 | INDUCTOR 2MH 10% Q=250 | 91637 | IPE-1231-16 |
| A19L7 | 9140-0447 | 6 | | INDUCTOR 2MH 10% Q=250 | 91637 | IPE-1231-16 |
| A19Q1 | 1854-0071 | 7 | 8 | TRANSISTOR NPN SI PD=300MW FT=200MHZ | 13606 | |
| A19Q2 | 1854-0071 | 7 | | TRANSISTOR NPN SI PD=300MW FT=200MHZ | 13606 | |
| A19Q3 | 1854-0071 | 7 | | TRANSISTOR NPN SI PD=300MW FT=200MHZ | 13606 | |
| A19Q4 | 1854-0071 | 7 | | TRANSISTOR NPN SI PD=300MW FT=200MHZ | 13606 | |
| A19Q5 | 1853-0010 | 2 | 1 | TRANSISTOR PNP SI TO-18 PD=360MW | 04713 | |
| A19Q6 | 1854-0071 | 7 | | TRANSISTOR NPN SI PD=300MW FT=200MHZ | 13606 | |
| A19Q7 | 1854-0071 | 7 | | TRANSISTOR NPN SI PD=300MW FT=200MHZ | 13606 | |
| A19Q8 | 1854-0071 | 7 | | TRANSISTOR NPN SI PD=300MW FT=200MHZ | 13606 | |
| A19Q9 | 1854-0071 | 7 | | TRANSISTOR NPN SI PD=300MW FT=200MHZ | 13606 | |
| A19Q10 | 1855-0081 | 1 | 1 | TRANSISTOR J-FET N-CHAN D-MODE SI | 04713 | SPF819 |
| A19R1 | 0683-1025 | 9 | 11 | RESISTOR 1K 5% .25W CF TC=0-400 | 77902 | R-25J |
| A19R2 | 0683-1025 | 9 | | RESISTOR 1K 5% .25W CF TC=0-400 | 77902 | R-25J |
| A19R3 | 0683-1025 | 9 | | RESISTOR 1K 5% .25W CF TC=0-400 | 77902 | R-25J |
| A19R4 | 0683-1025 | 9 | | RESISTOR 1K 5% .25W CF TC=0-400 | 77902 | R-25J |
| A19R5 | 0683-5625 | 3 | 1 | RESISTOR 5.6K 5% .25W CF TC=0-400 | 77902 | R-25J |
| A19R6 | 0699-0164 | 8 | 1 | RESISTOR 738.5 .1% .125W F TC=0+-25 | 19701 | 5033R |
| A19R7 | 0699-0163 | 7 | 1 | RESISTOR 466 .1% .125W F TC=0+-25 | 19701 | 5033R |
| A19R8 | 0698-8499 | 6 | 1 | RESISTOR 294 .1% .125W F TC=0+-25 | 19701 | 5033R |

See introduction to this section for ordering information
* Indicates one of several possible values installed

# Table 9-3. Replaceable Parts

| Reference Designation | HP Part Number | C D | Qty. | Description | Mfr. Code | Mfr. Part Number |
|---|---|---|---|---|---|---|
| A19R9 | 0699-0162 | 6 | 1 | RESISTOR 502.7 .1% .125W F TC=0+-25 | 19701 | 5033R |
| A19R10 | 0683-1025 | 9 | | RESISTOR 1K 5% .25W CF TC=0-400 | 77902 | R-25J |
| A19R11 | 0683-4705 | 8 | 3 | RESISTOR 47 5% .25W CF TC=0-400 | 77902 | R-25J |
| A19R12 | 0683-1015 | 7 | 18 | RESISTOR 100 5% .25W CF TC=0-400 | 77902 | R-25J |
| A19R13 | 0757-0439 | 4 | 1 | RESISTOR 6.81K 1% .125W F TC=0+-100 | 19701 | SFR25H |
| A19R14 | 0683-1015 | 7 | | RESISTOR 100 5% .25W CF TC=0-400 | 77902 | R-25J |
| A19R15 | 0683-2035 | 3 | 4 | RESISTOR 20K 5% .25W CF TC=0-400 | 77902 | R-25J |
| A19R16 | 0683-2035 | 3 | | RESISTOR 20K 5% .25W CF TC=0-400 | 77902 | R-25J |
| A19R17 | 0698-3518 | 0 | 2 | RESISTOR 7.32K 1% .125W F TC=0+-100 | 19701 | SFR25H |
| A19R18 | 0757-0279 | 0 | 1 | RESISTOR 3.16K 1% .125W F TC=0+-100 | 19701 | SFR25H |
| A19R19 | 0757-0416 | 7 | 2 | RESISTOR 511 1% .125W F TC=0+-100 | 19701 | SFR25H |
| A19R20 | 2100-2497 | 9 | 2 | RESISTOR-TRMR 2K 10% C TOP-ADJ 1-TRN | 73138 | 82PR2K |
| A19R21 | 0757-0283 | 6 | 2 | RESISTOR 2K 1% .125W F TC=0+-100 | 19701 | SFR25H |
| A19R22 | 0683-3325 | 6 | 2 | RESISTOR 3.3K 5% .25W CF TC=0-400 | 77902 | R-25J |
| A19R23 | 0683-1015 | 7 | | RESISTOR 100 5% .25W CF TC=0-400 | 77902 | R-25J |
| A19R24 | 0683-1015 | 7 | | RESISTOR 100 5% .25W CF TC=0-400 | 77902 | R-25J |
| A19R25 | 0698-3518 | 0 | | RESISTOR 7.32K 1% .125W F TC=0+-100 | 19701 | SFR25H |
| A19R26 | 0698-3496 | 3 | 1 | RESISTOR 3.57K 1% .125W F TC=0+-100 | 19701 | SFR25H |
| A19R27 | 0757-0416 | 7 | | RESISTOR 511 1% .125W F TC=0+-100 | 19701 | SFR25H |
| A19R28 | 2100-2497 | 9 | | RESISTOR-TRMR 2K 10% C TOP-ADJ 1-TRN | 73138 | 82PR2K |
| A19R29 | 0757-0283 | 6 | | RESISTOR 2K 1% .125W F TC=0+-100 | 19701 | SFR25H |
| A19R30 | 0683-3325 | 6 | | RESISTOR 3.3K 5% .25W CF TC=0-400 | 77902 | R-25J |
| A19R31 | 0683-1015 | 7 | | RESISTOR 100 5% .25W CF TC=0-400 | 77902 | R-25J |
| A19R32 | 0698-3558 | 8 | 1 | RESISTOR 4.02K 1% .125W F TC=0+-100 | 19701 | SFR25H |
| A19R33 | 0698-3540 | 8 | 1 | RESISTOR 15.4K 1% .125W F TC=0+-100 | 19701 | SFR25H |
| A19R34 | 0698-4436 | 3 | 1 | RESISTOR 2.8K 1% .125W F TC=0+-100 | 91637 | CMF-55-1, T-1 |
| A19R35 | 0683-3935 | 4 | 1 | RESISTOR 39K 5% .25W CF TC=0-400 | 77902 | R-25J |
| A19R36 | 0683-1345 | 6 | 1 | RESISTOR 130K 5% .25W CF TC=0-800 | 77902 | R-25J |
| A19R37 | 0683-2235 | 5 | 1 | RESISTOR 22K 5% .25W CF TC=0-400 | 77902 | R-25J |
| A19R38 | 0683-2035 | 3 | | RESISTOR 20K 5% .25W CF TC=0-400 | 77902 | R-25J |
| A19R39 | 0683-7525 | 6 | 1 | RESISTOR 7.5K 5% .25W CF TC=0-400 | 77902 | R-25J |
| A19R40 | 0683-2035 | 3 | | RESISTOR 20K 5% .25W CF TC=0-400 | 77902 | R-25J |
| A19R41 | 0683-3025 | 3 | 2 | RESISTOR 3K 5% .25W CF TC=0-400 | 77902 | R-25J |
| A19R42 | 0683-1015 | 7 | | RESISTOR 100 5% .25W CF TC=0-400 | 77902 | R-25J |
| A19R43 | 0683-1235 | 3 | 1 | RESISTOR 12K 5% .25W CF TC=0-400 | 77902 | R-25J |
| A19R44 | 0698-4506 | 8 | 2 | RESISTOR 73.2K 1% .125W F TC=0+-100 | 91637 | CMF-55-1, T-1 |
| A19R45 | 0698-4492 | 1 | 2 | RESISTOR 32.4K 1% .125W F TC=0+-100 | 91637 | CMF-55-1, T-1 |
| A19R46 | 0698-4471 | 6 | 2 | RESISTOR 7.15K 1% .125W F TC=0+-100 | 91637 | CMF-55-1, T-1 |
| A19R47 | 0698-4431 | 8 | 2 | RESISTOR 2.05K 1% .125W F TC=0+-100 | 91637 | CMF-55-1, T-1 |
| A19R48 | 0698-4453 | 4 | 2 | RESISTOR 402 1% .125W F TC=0+-100 | 91637 | CMF-55-1, T-1 |
| A19R49 | 0683-2025 | 1 | 9 | RESISTOR 2K 5% .25W CF TC=0-400 | 77902 | R-25J |
| A19R50 | 0683-2025 | 1 | | RESISTOR 2K 5% .25W CF TC=0-400 | 77902 | R-25J |
| A19R51 | 0683-2025 | 1 | | RESISTOR 2K 5% .25W CF TC=0-400 | 77902 | R-25J |
| A19R52 | 0683-2025 | 1 | | RESISTOR 2K 5% .25W CF TC=0-400 | 77902 | R-25J |
| A19R53 | 0683-2425 | 5 | 1 | RESISTOR 2.4K 5% .25W CF TC=0-400 | 77902 | R-25J |
| A19R54 | 0683-5125 | 8 | 1 | RESISTOR 5.1K 5% .25W CF TC=0-400 | 77902 | R-25J |
| A19R55 | 0683-1015 | 7 | | RESISTOR 100 5% .25W CF TC=0-400 | 77902 | R-25J |
| A19R56 | 0683-1035 | 1 | 2 | RESISTOR 10K 5% .25W CF TC=0-400 | 77902 | R-25J |
| A19R57 | 0698-4506 | 8 | | RESISTOR 73.2K 1% .125W F TC=0+-100 | 91637 | CMF-55-1, T-1 |
| A19R58 | 0698-4492 | 1 | | RESISTOR 32.4K 1% .125W F TC=0+-100 | 91637 | CMF-55-1, T-1 |
| A19R59 | 0698-4471 | 6 | | RESISTOR 7.15K 1% .125W F TC=0+-100 | 91637 | CMF-55-1, T-1 |
| A19R60 | 0698-4431 | 8 | | RESISTOR 2.05K 1% .125W F TC=0+-100 | 91637 | CMF-55-1, T-1 |
| A19R61 | 0698-4453 | 4 | | RESISTOR 402 1% .125W F TC=0+-100 | 91637 | CMF-55-1, T-1 |
| A19R62 | 0683-2025 | 1 | | RESISTOR 2K 5% .25W CF TC=0-400 | 77902 | R-25J |
| A19R63 | 0683-2025 | 1 | | RESISTOR 2K 5% .25W CF TC=0-400 | 77902 | R-25J |
| A19R64 | 0683-2025 | 1 | | RESISTOR 2K 5% .25W CF TC=0-400 | 77902 | R-25J |
| A19R65 | 0683-2025 | 1 | | RESISTOR 2K 5% .25W CF TC=0-400 | 77902 | R-25J |
| A19R66 | 0683-1045 | 3 | 4 | RESISTOR 100K 5% .25W CF TC=0-400 | 77902 | R-25J |
| A19R67 | 0683-1045 | 3 | | RESISTOR 100K 5% .25W CF TC=0-400 | 77902 | R-25J |
| A19R68 | 0683-1045 | 3 | | RESISTOR 100K 5% .25W CF TC=0-400 | 77902 | R-25J |
| A19R69 | 0683-1045 | 3 | | RESISTOR 100K 5% .25W CF TC=0-400 | 77902 | R-25J |
| A19R70 | 0683-1015 | 7 | | RESISTOR 100 5% .25W CF TC=0-400 | 77902 | R-25J |
| A19R71 | 0698-4443 | 2 | 1 | RESISTOR 4.53K 1% .125W F TC=0+-100 | 91637 | CMF-55-1, T-1 |
| A19R72 | 0683-1015 | 7 | | RESISTOR 100 5% .25W CF TC=0-400 | 77902 | R-25J |
| A19R73 | 0683-1015 | 7 | | RESISTOR 100 5% .25W CF TC=0-400 | 77902 | R-25J |

See introduction to this section for ordering information
* Indicates one of several possible values installed

# Table 9-3. Replaceable Parts

| Reference Designation | HP Part Number | C D | Qty. | Description | Mfr. Code | Mfr. Part Number |
|---|---|---|---|---|---|---|
| A19R74 | 0683-1025 | 9 | | RESISTOR 1K 5% .25W CF TC=0-400 | 77902 | R-25J |
| A19R75 | 0683-4745 | 6 | 1 | RESISTOR 470K 5% .25W CF TC=0-800 | 77902 | R-25J |
| A19R76 | 0683-3025 | 3 | | RESISTOR 3K 5% .25W CF TC=0-400 | 77902 | R-25J |
| A19R77 | 0683-4715 | 0 | 1 | RESISTOR 470 5% .25W CF TC=0-400 | 77902 | R-25J |
| A19R78 | 0757-0280 | 3 | 1 | RESISTOR 1K 1% .125W F TC=0+-100 | 19701 | SFR25H |
| A19R79 | 0683-6825 | 7 | 1 | RESISTOR 6.8K 5% .25W CF TC=0-400 | 77902 | R-25J |
| A19R80 | 0683-1015 | 7 | | RESISTOR 100 5% .25W CF TC=0-400 | 77902 | R-25J |
| A19R81 | 0683-1015 | 7 | | RESISTOR 100 5% .25W CF TC=0-400 | 77902 | R-25J |
| A19R82 | 0683-2025 | 1 | | RESISTOR 2K 5% .25W CF TC=0-400 | 77902 | R-25J |
| A19R84* | 0698-4381 | 7 | 0 | RESISTOR 48.7 1% .125W F TC=0+-100 | 91637 | CMF-55-1, T-1 |
| A19R84* | 0698-4387 | 3 | 0 | RESISTOR 60.4 1% .125W F TC=0+-100 | 91637 | CMF-55-1, T-1 |
| A19R84* | 0698-4393 | 1 | 0 | RESISTOR 73.2 1% .125W F TC=0+-100 | 91637 | CMF-55-1, T-1 |
| A19R84* | 0757-0386 | 0 | 0 | RESISTOR 24.3 1% .125W F TC=0+-100 | 19701 | SFR25H |
| A19R84* | 0757-0390 | 6 | 0 | RESISTOR 36.5 1% .125W F TC=0+-100 | 19701 | SFR25H |
| A19R84* | 0698-4397 | 5 | 1 | RESISTOR 84.5 1% .125W F TC=0+-100 | 91637 | CMF-55-1, T-1 |
| A19R84* | 0757-999P | 5 | 1 | R-F PAD VALUE "PAD" | 28480 | 0757-999P |
| A19R85 | 0698-3510 | 2 | 2 | RESISTOR 453 1% .125W F TC=0+-100 | 19701 | SFR25H |
| A19R86* | 0698-4381 | 7 | | RESISTOR 48.7 1% .125W F TC=0+-100 | 91637 | CMF-55-1, T-1 |
| A19R86* | 0698-4393 | 1 | | RESISTOR 73.2 1% .125W F TC=0+-100 | 91637 | CMF-55-1, T-1 |
| A19R86* | 0757-0386 | 0 | | RESISTOR 24.3 1% .125W F TC=0+-100 | 19701 | SFR25H |
| A19R86* | 0757-0390 | 6 | | RESISTOR 36.5 1% .125W F TC=0+-100 | 19701 | SFR25H |
| A19R86* | 0698-4402 | 3 | 1 | RESISTOR 97.6 1% .125W F TC=0+-100 | 91637 | CMF-55-1, T-1 |
| A19R86* | 0757-0402 | 1 | 1 | RESISTOR 110 1% .125W F TC=0+-100 | 19701 | SFR25H |
| A19R86* | 0757-0403 | 2 | 1 | RESISTOR 121 1% .125W F TC=0+-100 | 19701 | SFR25H |
| A19R87 | 0698-3510 | 2 | | RESISTOR 453 1% .125W F TC=0+-100 | 19701 | SFR25H |
| A19R88 | 0683-1025 | 9 | | RESISTOR 1K 5% .25W CF TC=0-400 | 77902 | R-25J |
| A19R89 | 0683-1025 | 9 | | RESISTOR 1K 5% .25W CF TC=0-400 | 77902 | R-25J |
| A19R90 | 0683-1025 | 9 | | RESISTOR 1K 5% .25W CF TC=0-400 | 77902 | R-25J |
| A19R91 | 0683-1025 | 9 | | RESISTOR 1K 5% .25W CF TC=0-400 | 77902 | R-25J |
| A19R92 | 0683-1025 | 9 | | RESISTOR 1K 5% .25W CF TC=0-400 | 77902 | R-25J |
| A19R93 | 0683-4705 | 8 | | RESISTOR 47 5% .25W CF TC=0-400 | 77902 | R-25J |
| A19R94 | 0683-4705 | 8 | | RESISTOR 47 5% .25W CF TC=0-400 | 77902 | R-25J |
| A19R95 | 0683-1015 | 7 | | RESISTOR 100 5% .25W CF TC=0-400 | 77902 | R-25J |
| A19R96 | 0757-0436 | 1 | 1 | RESISTOR 4.32K 1% .125W F TC=0+-100 | 19701 | SFR25H |
| A19R97 | 0698-4464 | 7 | 1 | RESISTOR 887 1% .125W F TC=0+-100 | 91637 | CMF-55-1, T-1 |
| A19R98 | 0683-1035 | 1 | | RESISTOR 10K 5% .25W CF TC=0-400 | 77902 | R-25J |
| A19R99 | 0683-1015 | 7 | | RESISTOR 100 5% .25W CF TC=0-400 | 77902 | R-25J |
| A19R100 | 0683-1015 | 7 | | RESISTOR 100 5% .25W CF TC=0-400 | 77902 | R-25J |
| A19R101 | 0683-1015 | 7 | | RESISTOR 100 5% .25W CF TC=0-400 | 77902 | R-25J |
| A19R102 | 0683-1015 | 7 | | RESISTOR 100 5% .25W CF TC=0-400 | 77902 | R-25J |
| A19R103 | 0683-1015 | 7 | | RESISTOR 100 5% .25W CF TC=0-400 | 77902 | R-25J |
| A19R143 | 0683-1835 | 9 | 1 | RESISTOR 18K 5% .25W CF TC=0-400 | 77902 | R-25J |
| A19RT1 | 0839-0026 | 9 | 1 | THERMISTOR DISC 10K-OHM TC=-4.4%/C-DEG | 05098P01 | 41D4/H |
| A19RT2 | 0837-0050 | 5 | 1 | THERMISTOR DISC 1K-OHM TC=-4.4%/C-DEG | 15801 | KA31J1 |
| A19RT3 | 0837-0086 | 7 | 2 | THERMISTOR DISC 200-OHM TC=-4.4%/C-DEG | 15801 | KB22J24 |
| A19RT4 | 0837-0086 | 7 | | THERMISTOR DISC 200-OHM TC=-4.4%/C-DEG | 15801 | KB22J24 |
| A19T1 | 9100-3262 | 5 | 2 | TRANSFORMER TRANSFORMER; TOROIDAL PULSE | 91637 | ITU-1229-3 |
| A19T2 | 9100-3262 | 5 | | TRANSFORMER TRANSFORMER; TOROIDAL PULSE | 91637 | ITU-1229-3 |
| A19TP1 | 1251-0600 | 0 | 9 | CONNECTOR-SGL CONT PIN 1.14-MM-BSC-SZ SQ27264 | 27264 | 16-06-0034 |
| A19TP2 | 1251-0600 | 0 | | CONNECTOR-SGL CONT PIN 1.14-MM-BSC-SZ SQ27264 | 27264 | 16-06-0034 |
| A19TP3 | 1251-0600 | 0 | | CONNECTOR-SGL CONT PIN 1.14-MM-BSC-SZ SQ27264 | 27264 | 16-06-0034 |
| A19TP4 | 1251-0600 | 0 | | CONNECTOR-SGL CONT PIN 1.14-MM-BSC-SZ SQ27264 | 27264 | 16-06-0034 |
| A19TP5 | 1251-0600 | 0 | | CONNECTOR-SGL CONT PIN 1.14-MM-BSC-SZ SQ27264 | 27264 | 16-06-0034 |
| A19TP6 | 1251-0600 | 0 | | CONNECTOR-SGL CONT PIN 1.14-MM-BSC-SZ SQ27264 | 27264 | 16-06-0034 |
| A19TP7 | 1251-0600 | 0 | | CONNECTOR-SGL CONT PIN 1.14-MM-BSC-SZ SQ27264 | 27264 | 16-06-0034 |
| A19TP8 | 1251-0600 | 0 | | CONNECTOR-SGL CONT PIN 1.14-MM-BSC-SZ SQ27264 | 27264 | 16-06-0034 |
| A19TP9 | 1251-0600 | 0 | | CONNECTOR-SGL CONT PIN 1.14-MM-BSC-SZ SQ27264 | 27264 | 16-06-0034 |
| A19U1 | 1820-1196 | 8 | 3 | IC FF TTL LS D-TYPE POS-EDGE-TRIG COM | 01295 | |
| A19U2 | 1820-1196 | 8 | | IC FF TTL LS D-TYPE POS-EDGE-TRIG COM | 01295 | |
| A19U3 | 1820-1196 | 8 | | IC FF TTL LS D-TYPE POS-EDGE-TRIG COM | 01295 | |
| A19U4 | 1820-1216 | 3 | 1 | IC DCDR TTL LS 3-TO-8-LINE 3-INP | 01295 | |
| A19U5 | 1820-1195 | 7 | 1 | IC FF TTL LS D-TYPE POS-EDGE-TRIG COM | 01295 | |
| A19U6 | 1826-0846 | 5 | 4 | ANALOG SWITCH 4 SPST 16 -CBRZ/SDR | 27014 | |
| A19U7 | 1826-0846 | 5 | | ANALOG SWITCH 4 SPST 16 -CBRZ/SDR | 27014 | |
| A19U8 | 1826-0846 | 5 | | ANALOG SWITCH 4 SPST 16 -CBRZ/SDR | 27014 | |

See introduction to this section for ordering information
* Indicates one of several possible values installed

# Table 9-3. Replaceable Parts

| Reference Designation | HP Part Number | C D | Qty. | Description | Mfr. Code | Mfr. Part Number |
|---|---|---|---|---|---|---|
| A19U9 | 1826-0846 | 5 | | ANALOG SWITCH 4 SPST 16 -CBRZ/SDR | 27014 | |
| A19U10 | 1826-1018 | 5 | 1 | ANALOG SWITCH 4 SPST 16 -DIP-P | 17856 | |
| | 4330-0496 | 3 | 4 | INSULATOR-BEAD GLASS | 53101 | KG12 |
| | 1480-0116 | 8 | 2 | PIN-GRV .062-IN-DIA .25-IN-LG STL | 73957 | GP24-063 X 250-14 |
| | 1400-0249 | 0 | 2 | CABLE TIE .062-.625-DIA .091-WD NYL | 56501 | TY-23M-8 |
| | 6960-0080 | 8 | 1 | PLUG-HOLE FL-HD FOR .185-D-HOLE TFE | 98291 | 119-0052-00-0-009 |
| | 0403-0211 | 1 | 1 | MOLD XTR-PC BD BRN .062TKBD | 28480 | |
| | 0403-0219 | 9 | 1 | MOLD XTR-PC BD WHT .062TKBD | 28480 | |
| | 7121-4611 | 2 | 1 | LABEL-INFORMATION .15-IN-WD .6-IN-LG | 28480 | L01003 |
| **A21** | **03585-66521** | **6** | **1** | **90/10 MHZ/REF PC BD ASSEMBLY** | **28480** | **03585-66521** |
| A21C1 | 0180-1746 | 5 | 4 | CAPACITOR-FXD 15UF+-10% 20VDC TA | 13606 | 150D156X9020B2-DYS |
| A21C2 | 0160-3847 | 9 | 25 | CAPACITOR-FXD .01UF +100-0% 50VDC CER | 04222 | SA105C103KAA |
| A21C3 | 0160-3847 | 9 | | CAPACITOR-FXD .01UF +100-0% 50VDC CER | 04222 | SA105C103KAA |
| A21C4 | 0160-2200 | 6 | 2 | CAPACITOR-FXD 43PF +-5% 300VDC MICA | 00853 | |
| A21C5 | 0160-2200 | 6 | | CAPACITOR-FXD 43PF +-5% 300VDC MICA | 00853 | |
| A21C6 | 0160-3847 | 9 | | CAPACITOR-FXD .01UF +100-0% 50VDC CER | 04222 | SA105C103KAA |
| A21C7 | 0160-3847 | 9 | | CAPACITOR-FXD .01UF +100-0% 50VDC CER | 04222 | SA105C103KAA |
| A21C8 | 0160-3847 | 9 | | CAPACITOR-FXD .01UF +100-0% 50VDC CER | 04222 | SA105C103KAA |
| A21C9 | 0160-3847 | 9 | | CAPACITOR-FXD .01UF +100-0% 50VDC CER | 04222 | SA105C103KAA |
| A21C10 | 0160-3847 | 9 | | CAPACITOR-FXD .01UF +100-0% 50VDC CER | 04222 | SA105C103KAA |
| A21C11 | 0160-3847 | 9 | | CAPACITOR-FXD .01UF +100-0% 50VDC CER | 04222 | SA105C103KAA |
| A21C12 | 0160-6524 | 5 | 2 | C-F 6.8PF --% 200V CERMLr | 28480 | RPE121-978C0G6R8D200V |
| A21C13 | 0160-3847 | 9 | | CAPACITOR-FXD .01UF +100-0% 50VDC CER | 04222 | SA105C103KAA |
| A21C14 | 0160-6524 | 5 | | C-F 6.8PF --% 200V CERMLr | 28480 | RPE121-978C0G6R8D200V |
| A21C15 | 0160-3847 | 9 | | CAPACITOR-FXD .01UF +100-0% 50VDC CER | 04222 | SA105C103KAA |
| A21C16 | 0140-0190 | 7 | 1 | CAPACITOR-FXD 39PF +-5% 300VDC MICA | 09023 | |
| A21C17 | 0160-2202 | 8 | 1 | CAPACITOR-FXD 75PF +-5% 300VDC MICA | 00853 | |
| A21C18 | 0160-6507 | 4 | 2 | C-F 1000PF 20% 100V CERMLr | 28480 | RPE121-978X7R102M100V |
| A21C19 | 0160-6507 | 4 | | C-F 1000PF 20% 100V CERMLr | 28480 | RPE121-978X7R102M100V |
| A21C20 | 0160-6510 | 9 | 5 | C-F .1UF 20% 50V CERMLr | 28480 | RPE121-978X7R104M50V |
| A21C21 | 0160-6510 | 9 | | C-F .1UF 20% 50V CERMLr | 28480 | RPE121-978X7R104M50V |
| A21C22 | 0160-3847 | 9 | | CAPACITOR-FXD .01UF +100-0% 50VDC CER | 04222 | SA105C103KAA |
| A21C23 | 0140-0207 | 7 | 1 | CAPACITOR-FXD 330PF +-5% 500VDC MICA | 09023 | |
| A21C24 | 0160-2206 | 2 | 1 | CAPACITOR-FXD 160PF +-5% 300VDC MICA | 00853 | |
| A21C25 | 0160-3847 | 9 | | CAPACITOR-FXD .01UF +100-0% 50VDC CER | 04222 | SA105C103KAA |
| A21C26 | 0160-3847 | 9 | | CAPACITOR-FXD .01UF +100-0% 50VDC CER | 04222 | SA105C103KAA |
| A21C27 | 0160-3847 | 9 | | CAPACITOR-FXD .01UF +100-0% 50VDC CER | 04222 | SA105C103KAA |
| A21C28 | 0160-3847 | 9 | | CAPACITOR-FXD .01UF +100-0% 50VDC CER | 04222 | SA105C103KAA |
| A21C29 | 0160-3847 | 9 | | CAPACITOR-FXD .01UF +100-0% 50VDC CER | 04222 | SA105C103KAA |
| A21C30 | 0160-3847 | 9 | | CAPACITOR-FXD .01UF +100-0% 50VDC CER | 04222 | SA105C103KAA |
| A21C31 | 0160-3847 | 9 | | CAPACITOR-FXD .01UF +100-0% 50VDC CER | 04222 | SA105C103KAA |
| A21C32 | 0160-3847 | 9 | | CAPACITOR-FXD .01UF +100-0% 50VDC CER | 04222 | SA105C103KAA |
| A21C33 | 0160-2201 | 7 | 2 | CAPACITOR-FXD 51PF +-5% 300VDC MICA | 00853 | |
| A21C34 | 0160-3847 | 9 | | CAPACITOR-FXD .01UF +100-0% 50VDC CER | 04222 | SA105C103KAA |
| A21C35 | 0160-2201 | 7 | | CAPACITOR-FXD 51PF +-5% 300VDC MICA | 00853 | |
| A21C36 | 0180-1746 | 5 | | CAPACITOR-FXD 15UF+-10% 20VDC TA | 13606 | 150D156X9020B2-DYS |
| A21C37 | 0160-6510 | 9 | | C-F .1UF 20% 50V CERMLr | 28480 | RPE121-978X7R104M50V |
| A21C38 | 0160-6510 | 9 | | C-F .1UF 20% 50V CERMLr | 28480 | RPE121-978X7R104M50V |
| A21C41 | 0180-1746 | 5 | | CAPACITOR-FXD 15UF+-10% 20VDC TA | 13606 | 150D156X9020B2-DYS |
| A21C42 | 0160-2306 | 3 | 1 | CAPACITOR-FXD 27PF +-5% 300VDC MICA | 00853 | |
| A21C43 | 0160-3847 | 9 | | CAPACITOR-FXD .01UF +100-0% 50VDC CER | 04222 | SA105C103KAA |
| A21C50 | 0160-3847 | 9 | | CAPACITOR-FXD .01UF +100-0% 50VDC CER | 04222 | SA105C103KAA |
| A21C51 | 0140-0199 | 6 | 1 | CAPACITOR-FXD 240PF +-5% 300VDC MICA | 09023 | |
| A21C52 | 0160-3847 | 9 | | CAPACITOR-FXD .01UF +100-0% 50VDC CER | 04222 | SA105C103KAA |
| A21C53 | 0160-3847 | 9 | | CAPACITOR-FXD .01UF +100-0% 50VDC CER | 04222 | SA105C103KAA |
| A21C54 | 0160-3847 | 9 | | CAPACITOR-FXD .01UF +100-0% 50VDC CER | 04222 | SA105C103KAA |
| A21C55 | 0140-0191 | 8 | 1 | CAPACITOR-FXD 56PF +-5% 300VDC MICA | 09023 | CD15ED560J03C |
| A21C56 | 0160-6508 | 5 | 2 | C-F 22PF 5% 200V CERMLr | 28480 | RPE121-978C0G220J200V |
| A21C57 | 0160-6508 | 5 | | C-F 22PF 5% 200V CERMLr | 28480 | RPE121-978C0G220J200V |
| A21C58 | 0140-0196 | 3 | 1 | CAPACITOR-FXD 150PF +-5% 300VDC MICA | 09023 | |
| A21C60 | 0160-0174 | 9 | 2 | CAPACITOR-FXD .47UF +80-20% 50VDC CER | 04222 | SR835E474ZAA |
| A21C61 | 0160-0170 | 5 | 1 | CAPACITOR-FXD .22UF +80-20% 50VDC CER | 13606 | 2C37Z5U224Z050A |
| A21C62 | 0180-1746 | 5 | | CAPACITOR-FXD 15UF+-10% 20VDC TA | 13606 | 150D156X9020B2-DYS |
| A21C63 | 0160-0174 | 9 | | CAPACITOR-FXD .47UF +80-20% 50VDC CER | 04222 | SR835E474ZAA |
| A21C64 | 0180-0116 | 1 | 1 | CAPACITOR-FXD 6.8UF+-10% 35VDC TA | 13606 | 150D685X9035B2-DYS |

See introduction to this section for ordering information
* Indicates one of several possible values installed

# Table 9-3. Replaceable Parts

| Reference Designation | HP Part Number | C D | Qty. | Description | Mfr. Code | Mfr. Part Number |
|---|---|---|---|---|---|---|
| A21C65 | 0160-6510 | 9 | | C-F .1UF 20% 50V CERMLr | 28480 | RPE121-978X7R104M50V |
| A21CR1 | 1901-0535 | 9 | 1 | DIODE-SCHOTTKY SM SIG | 28480 | 1901-0535 |
| A21CR2 | 0122-0085 | 1 | 1 | DIODE-VVC 2.2PF 7% C3/C25-MIN=4.5 | S0545 | |
| A21CR5 | 1901-0040 | 1 | 8 | DIODE-SWITCHING 30V 50MA 2NS DO-35 | 9N171 | |
| A21CR6 | 1901-0040 | 1 | | DIODE-SWITCHING 30V 50MA 2NS DO-35 | 9N171 | |
| A21CR7 | 1901-0040 | 1 | | DIODE-SWITCHING 30V 50MA 2NS DO-35 | 9N171 | |
| A21CR8 | 1901-0040 | 1 | | DIODE-SWITCHING 30V 50MA 2NS DO-35 | 9N171 | |
| A21CR9 | 1901-0040 | 1 | | DIODE-SWITCHING 30V 50MA 2NS DO-35 | 9N171 | |
| A21CR10 | 1901-0040 | 1 | | DIODE-SWITCHING 30V 50MA 2NS DO-35 | 9N171 | |
| A21CR11 | 1901-0040 | 1 | | DIODE-SWITCHING 30V 50MA 2NS DO-35 | 9N171 | |
| A21CR12 | 1901-0040 | 1 | | DIODE-SWITCHING 30V 50MA 2NS DO-35 | 9N171 | |
| A21H1 | 03585-04107 | 4 | 1 | SHTF CVR-21 AL | 28480 | 03585-04107 |
| A21H1 | 0570-1030 | 7 | 2 | STD-PRS 6-32 .31LG STLZ | 46384 | FH-632-5-ZI |
| A21H2 | 0370-2583 | 3 | 2 | MOLD KNOB-THRD F 6-32 | 04533P01 | 3001-SD |
| A21H3 | 0370-2583 | 3 | | MOLD KNOB-THRD F 6-32 | 04533P01 | 3001-SD |
| A21H31 | 2190-0124 | 4 | 9 | WASHER-LK INTL T NO. 10 .195-IN-ID | 98291 | 3002-26 |
| A21H32 | 2190-0124 | 4 | | WASHER-LK INTL T NO. 10 .195-IN-ID | 98291 | 3002-26 |
| A21H33 | 2190-0124 | 4 | | WASHER-LK INTL T NO. 10 .195-IN-ID | 98291 | 3002-26 |
| A21H34 | 2190-0124 | 4 | | WASHER-LK INTL T NO. 10 .195-IN-ID | 98291 | 3002-26 |
| A21H35 | 2190-0124 | 4 | | WASHER-LK INTL T NO. 10 .195-IN-ID | 98291 | 3002-26 |
| A21H36 | 2190-0124 | 4 | | WASHER-LK INTL T NO. 10 .195-IN-ID | 98291 | 3002-26 |
| A21H37 | 2190-0124 | 4 | | WASHER-LK INTL T NO. 10 .195-IN-ID | 98291 | 3002-26 |
| A21H38 | 2190-0124 | 4 | | WASHER-LK INTL T NO. 10 .195-IN-ID | 98291 | 3002-26 |
| A21H39 | 2190-0124 | 4 | | WASHER-LK INTL T NO. 10 .195-IN-ID | 98291 | 3002-26 |
| A21H40 | 2200-0103 | 2 | 9 | SCREW-MACH 4-40 .25-IN-LG PAN-HD-POZI | 83486 | |
| A21H41 | 2200-0103 | 2 | | SCREW-MACH 4-40 .25-IN-LG PAN-HD-POZI | 83486 | |
| A21H42 | 2200-0103 | 2 | | SCREW-MACH 4-40 .25-IN-LG PAN-HD-POZI | 83486 | |
| A21H43 | 2200-0103 | 2 | | SCREW-MACH 4-40 .25-IN-LG PAN-HD-POZI | 83486 | |
| A21H44 | 2200-0103 | 2 | | SCREW-MACH 4-40 .25-IN-LG PAN-HD-POZI | 83486 | |
| A21H45 | 2200-0103 | 2 | | SCREW-MACH 4-40 .25-IN-LG PAN-HD-POZI | 83486 | |
| A21H46 | 2200-0103 | 2 | | SCREW-MACH 4-40 .25-IN-LG PAN-HD-POZI | 83486 | |
| A21H47 | 2200-0103 | 2 | | SCREW-MACH 4-40 .25-IN-LG PAN-HD-POZI | 83486 | |
| A21H48 | 2200-0103 | 2 | | SCREW-MACH 4-40 .25-IN-LG PAN-HD-POZI | 83486 | |
| A21H49 | 2950-0078 | 9 | 9 | NUT-HEX-DBL-CHAM 10-32-THD .067-IN-THK | 98291 | 33002-18-00-0-156 |
| A21H50 | 2950-0078 | 9 | | NUT-HEX-DBL-CHAM 10-32-THD .067-IN-THK | 98291 | 33002-18-00-0-156 |
| A21H51 | 2950-0078 | 9 | | NUT-HEX-DBL-CHAM 10-32-THD .067-IN-THK | 98291 | 33002-18-00-0-156 |
| A21H52 | 2950-0078 | 9 | | NUT-HEX-DBL-CHAM 10-32-THD .067-IN-THK | 98291 | 33002-18-00-0-156 |
| A21H53 | 2950-0078 | 9 | | NUT-HEX-DBL-CHAM 10-32-THD .067-IN-THK | 98291 | 33002-18-00-0-156 |
| A21H54 | 2950-0078 | 9 | | NUT-HEX-DBL-CHAM 10-32-THD .067-IN-THK | 98291 | 33002-18-00-0-156 |
| A21H55 | 2950-0078 | 9 | | NUT-HEX-DBL-CHAM 10-32-THD .067-IN-THK | 98291 | 33002-18-00-0-156 |
| A21H56 | 2950-0078 | 9 | | NUT-HEX-DBL-CHAM 10-32-THD .067-IN-THK | 98291 | 33002-18-00-0-156 |
| A21H57 | 2950-0078 | 9 | | NUT-HEX-DBL-CHAM 10-32-THD .067-IN-THK | 98291 | 33002-18-00-0-156 |
| A21H58 | 5001-0176 | 0 | 2 | STMP GRD STRAP | 28480 | 5001-0176 |
| A21H59 | 5001-0176 | 0 | | STMP GRD STRAP | 28480 | 5001-0176 |
| A21J1 | 1250-2142 | 7 | 9 | CON-SMB | 74970 | 131-3701-341 |
| A21J2 | 1250-2142 | 7 | | CON-SMB | 74970 | 131-3701-341 |
| A21J3 | 1250-2142 | 7 | | CON-SMB | 74970 | 131-3701-341 |
| A21J4 | 1250-2142 | 7 | | CON-SMB | 74970 | 131-3701-341 |
| A21J5 | 1250-2142 | 7 | | CON-SMB | 74970 | 131-3701-341 |
| A21J6 | 1250-2142 | 7 | | CON-SMB | 74970 | 131-3701-341 |
| A21J7 | 1250-2142 | 7 | | CON-SMB | 74970 | 131-3701-341 |
| A21J8 | 1250-2142 | 7 | | CON-SMB | 74970 | 131-3701-341 |
| A21J9 | 1250-2142 | 7 | | CON-SMB | 74970 | 131-3701-341 |
| A21J10 | 1250-1314 | 3 | 2 | CONNECTOR-RF SM-SLD FEM PC 50-OHM | 98291 | 52-054-0000-226 |
| A21J11 | 1250-1314 | 3 | | CONNECTOR-RF SM-SLD FEM PC 50-OHM | 98291 | 52-054-0000-226 |
| A21L1 | 9100-1618 | 1 | 4 | INDUCTOR RF-CH-MLD 5.6UH 10% | 99800 | 1537-30 |
| A21L2 | 9100-2255 | 4 | 3 | INDUCTOR RF-CH-MLD 470NH 10% .105DX.26LG24226 | 24226 | 10M470K |
| A21L3 | 9140-0144 | 0 | 21 | INDUCTOR RF-CH-MLD 4.7UH 10% .105DX.26LG99800 | 99800 | 1025-36 |
| A21L4 | 9100-2247 | 4 | 2 | INDUCTOR RF-CH-MLD 100NH 10% .105DX.26LG24226 | 24226 | 10M100K |
| A21L5 | 9140-0144 | 0 | | INDUCTOR RF-CH-MLD 4.7UH 10% .105DX.26LG99800 | 99800 | 1025-36 |
| A21L6 | 9140-0144 | 0 | | INDUCTOR RF-CH-MLD 4.7UH 10% .105DX.26LG99800 | 99800 | 1025-36 |
| A21L7 | 9140-0144 | 0 | | INDUCTOR RF-CH-MLD 4.7UH 10% .105DX.26LG99800 | 99800 | 1025-36 |
| A21L8 | 9140-0144 | 0 | | INDUCTOR RF-CH-MLD 4.7UH 10% .105DX.26LG99800 | 99800 | 1025-36 |
| A21L9 | 9100-2255 | 4 | | INDUCTOR RF-CH-MLD 470NH 10% .105DX.26LG24226 | 24226 | 10M470K |
| A21L10 | 9140-0144 | 0 | | INDUCTOR RF-CH-MLD 4.7UH 10% .105DX.26LG99800 | 99800 | 1025-36 |

See introduction to this section for ordering information
* Indicates one of several possible values installed

# Table 9-3. Replaceable Parts

| Reference Designation | HP Part Number | C D | Qty. | Description | Mfr. Code | Mfr. Part Number |
|---|---|---|---|---|---|---|
| A21L11 | 9100-2255 | 4 | | INDUCTOR RF-CH-MLD 470NH 10% .105DX.26LG24226 | 24226 | 10M470K |
| A21L12 | 9140-0144 | 0 | | INDUCTOR RF-CH-MLD 4.7UH 10% .105DX.26LG99800 | 99800 | 1025-36 |
| A21L13 | 9100-2247 | 4 | | INDUCTOR RF-CH-MLD 100NH 10% .105DX.26LG24226 | 24226 | 10M100K |
| A21L14 | 9140-0144 | 0 | | INDUCTOR RF-CH-MLD 4.7UH 10% .105DX.26LG99800 | 99800 | 1025-36 |
| A21L20 | 9140-0144 | 0 | | INDUCTOR RF-CH-MLD 4.7UH 10% .105DX.26LG99800 | 99800 | 1025-36 |
| A21L21 | 9140-0144 | 0 | | INDUCTOR RF-CH-MLD 4.7UH 10% .105DX.26LG99800 | 99800 | 1025-36 |
| A21L22 | 9140-0142 | 8 | 1 | INDUCTOR RF-CH-MLD 2.2UH 10% .105DX.26LG99800 | 99800 | 1025-28 |
| A21L23 | 9100-1618 | 1 | | INDUCTOR RF-CH-MLD 5.6UH 10% | 99800 | 1537-30 |
| A21L24 | 9140-0144 | 0 | | INDUCTOR RF-CH-MLD 4.7UH 10% .105DX.26LG99800 | 99800 | 1025-36 |
| A21L25 | 9140-0144 | 0 | | INDUCTOR RF-CH-MLD 4.7UH 10% .105DX.26LG99800 | 99800 | 1025-36 |
| A21L26 | 9140-0144 | 0 | | INDUCTOR RF-CH-MLD 4.7UH 10% .105DX.26LG99800 | 99800 | 1025-36 |
| A21L27 | 9140-0144 | 0 | | INDUCTOR RF-CH-MLD 4.7UH 10% .105DX.26LG99800 | 99800 | 1025-36 |
| A21L28 | 9140-0144 | 0 | | INDUCTOR RF-CH-MLD 4.7UH 10% .105DX.26LG99800 | 99800 | 1025-36 |
| A21L29 | 9140-0144 | 0 | | INDUCTOR RF-CH-MLD 4.7UH 10% .105DX.26LG99800 | 99800 | 1025-36 |
| A21L30 | 9140-0144 | 0 | | INDUCTOR RF-CH-MLD 4.7UH 10% .105DX.26LG99800 | 99800 | 1025-36 |
| A21L31 | 9140-0144 | 0 | | INDUCTOR RF-CH-MLD 4.7UH 10% .105DX.26LG99800 | 99800 | 1025-36 |
| A21L32 | 9140-0144 | 0 | | INDUCTOR RF-CH-MLD 4.7UH 10% .105DX.26LG99800 | 99800 | 1025-36 |
| A21L41 | 9100-1618 | 1 | | INDUCTOR RF-CH-MLD 5.6UH 10% | 99800 | 1537-30 |
| A21L42 | 9140-0158 | 6 | 3 | INDUCTOR RF-CH-MLD 1UH 10% .105DX.26LG | 32159 | 1A1002M +-10% |
| A21L50 | 9140-0144 | 0 | | INDUCTOR RF-CH-MLD 4.7UH 10% .105DX.26LG99800 | 99800 | 1025-36 |
| A21L51 | 9140-0158 | 6 | | INDUCTOR RF-CH-MLD 1UH 10% .105DX.26LG | 32159 | 1A1002M +-10% |
| A21L52 | 9140-0144 | 0 | | INDUCTOR RF-CH-MLD 4.7UH 10% .105DX.26LG99800 | 99800 | 1025-36 |
| A21L53 | 9140-0210 | 1 | 1 | INDUCTOR RF-CH-MLD 100UH 5% .166DX.385LG99800 | 99800 | 1537-76 |
| A21L54 | 9100-1618 | 1 | | INDUCTOR RF-CH-MLD 5.6UH 10% | 99800 | 1537-30 |
| A21L55 | 9100-2258 | 7 | 1 | INDUCTOR RF-CH-MLD 1.2UH 10% .105DX.26LG99800 | 99800 | 1025-22 |
| A21L56 | 9140-0158 | 6 | | INDUCTOR RF-CH-MLD 1UH 10% .105DX.26LG | 32159 | 1A1002M +-10% |
| A21Q1 | 1853-0354 | 7 | 1 | TRANSISTOR PNP SI TO-92 PD=350MW | 04713 | |
| A21Q2 | 1853-0405 | 9 | 3 | TRANSISTOR PNP SI PD=300MW FT=850MHZ | 04713 | |
| A21Q3 | 1853-0405 | 9 | | TRANSISTOR PNP SI PD=300MW FT=850MHZ | 04713 | |
| A21Q4 | 1853-0405 | 9 | | TRANSISTOR PNP SI PD=300MW FT=850MHZ | 04713 | |
| A21Q5 | 1853-0010 | 2 | 9 | TRANSISTOR PNP SI TO-18 PD=360MW | 04713 | |
| A21Q6 | 1853-0010 | 2 | | TRANSISTOR PNP SI TO-18 PD=360MW | 04713 | |
| A21Q7 | 1853-0010 | 2 | | TRANSISTOR PNP SI TO-18 PD=360MW | 04713 | |
| A21Q8 | 1853-0010 | 2 | | TRANSISTOR PNP SI TO-18 PD=360MW | 04713 | |
| A21Q9 | 1853-0010 | 2 | | TRANSISTOR PNP SI TO-18 PD=360MW | 04713 | |
| A21Q10 | 1853-0010 | 2 | | TRANSISTOR PNP SI TO-18 PD=360MW | 04713 | |
| A21Q11 | 1853-0010 | 2 | | TRANSISTOR PNP SI TO-18 PD=360MW | 04713 | |
| A21Q12 | 1853-0010 | 2 | | TRANSISTOR PNP SI TO-18 PD=360MW | 04713 | |
| A21Q13 | 1853-0640 | 4 | 2 | XTR SML1PNP** | 27014 | 6692 |
| A21Q14 | 1853-0640 | 4 | | XTR SML1PNP** | 27014 | 6692 |
| A21Q15 | 1853-0010 | 2 | | TRANSISTOR PNP SI TO-18 PD=360MW | 04713 | |
| A21Q16 | 1855-0628 | 2 | 1 | XTR SML1JFETP SI XXXXXXX P92 | 17856 | |
| A21Q17 | 1854-0092 | 2 | 1 | TRANSISTOR NPN SI PD=200MW FT=600MHZ | 04713 | |
| A21R1 | 0683-1025 | 9 | 34 | RESISTOR 1K 5% .25W CF TC=0-400 | 77902 | R-25J |
| A21R2 | 0683-1025 | 9 | | RESISTOR 1K 5% .25W CF TC=0-400 | 77902 | R-25J |
| A21R3 | 0683-4705 | 8 | 16 | RESISTOR 47 5% .25W CF TC=0-400 | 77902 | R-25J |
| A21R4 | 0683-4705 | 8 | | RESISTOR 47 5% .25W CF TC=0-400 | 77902 | R-25J |
| A21R5 | 0683-4705 | 8 | | RESISTOR 47 5% .25W CF TC=0-400 | 77902 | R-25J |
| A21R6 | 0683-4705 | 8 | | RESISTOR 47 5% .25W CF TC=0-400 | 77902 | R-25J |
| A21R7 | 0683-4715 | 0 | 14 | RESISTOR 470 5% .25W CF TC=0-400 | 77902 | R-25J |
| A21R8 | 0683-6815 | 5 | 11 | RESISTOR 680 5% .25W CF TC=0-400 | 77902 | R-25J |
| A21R9 | 0683-6815 | 5 | | RESISTOR 680 5% .25W CF TC=0-400 | 77902 | R-25J |
| A21R10 | 0683-6815 | 5 | | RESISTOR 680 5% .25W CF TC=0-400 | 77902 | R-25J |
| A21R11 | 0683-3315 | 4 | 4 | RESISTOR 330 5% .25W CF TC=0-400 | 77902 | R-25J |
| A21R12 | 0683-3315 | 4 | | RESISTOR 330 5% .25W CF TC=0-400 | 77902 | R-25J |
| A21R13 | 0683-1805 | 3 | 4 | RESISTOR 18 5% .25W CF TC=0-400 | 77902 | R-25J |
| A21R14 | 0683-1805 | 3 | | RESISTOR 18 5% .25W CF TC=0-400 | 77902 | R-25J |
| A21R15 | 0683-1805 | 3 | | RESISTOR 18 5% .25W CF TC=0-400 | 77902 | R-25J |
| A21R16 | 0683-6815 | 5 | | RESISTOR 680 5% .25W CF TC=0-400 | 77902 | R-25J |
| A21R17 | 0683-6815 | 5 | | RESISTOR 680 5% .25W CF TC=0-400 | 77902 | R-25J |
| A21R18 | 0683-6815 | 5 | | RESISTOR 680 5% .25W CF TC=0-400 | 77902 | R-25J |
| A21R19 | 0683-6815 | 5 | | RESISTOR 680 5% .25W CF TC=0-400 | 77902 | R-25J |
| A21R20 | 0683-4715 | 0 | | RESISTOR 470 5% .25W CF TC=0-400 | 77902 | R-25J |
| A21R21 | 0683-3905 | 8 | 4 | RESISTOR 39 5% .25W CF TC=0-400 | 77902 | R-25J |
| A21R22 | 0683-6815 | 5 | | RESISTOR 680 5% .25W CF TC=0-400 | 77902 | R-25J |

See introduction to this section for ordering information
* Indicates one of several possible values installed

# Table 9-3. Replaceable Parts

| Reference Designation | HP Part Number | C D | Qty. | Description | Mfr. Code | Mfr. Part Number |
|---|---|---|---|---|---|---|
| A21R23 | 0683-4715 | 0 | | RESISTOR 470 5% .25W CF TC=0-400 | 77902 | R-25J |
| A21R24 | 0683-3905 | 8 | | RESISTOR 39 5% .25W CF TC=0-400 | 77902 | R-25J |
| A21R25 | 0683-6815 | 5 | | RESISTOR 680 5% .25W CF TC=0-400 | 77902 | R-25J |
| A21R26 | 0683-1025 | 9 | | RESISTOR 1K 5% .25W CF TC=0-400 | 77902 | R-25J |
| A21R30 | 0683-6815 | 5 | | RESISTOR 680 5% .25W CF TC=0-400 | 77902 | R-25J |
| A21R31 | 0683-6815 | 5 | | RESISTOR 680 5% .25W CF TC=0-400 | 77902 | R-25J |
| A21R32 | 0683-4715 | 0 | | RESISTOR 470 5% .25W CF TC=0-400 | 77902 | R-25J |
| A21R33 | 0683-1025 | 9 | | RESISTOR 1K 5% .25W CF TC=0-400 | 77902 | R-25J |
| A21R34 | 0683-1025 | 9 | | RESISTOR 1K 5% .25W CF TC=0-400 | 77902 | R-25J |
| A21R35 | 0683-1025 | 9 | | RESISTOR 1K 5% .25W CF TC=0-400 | 77902 | R-25J |
| A21R36 | 0683-1025 | 9 | | RESISTOR 1K 5% .25W CF TC=0-400 | 77902 | R-25J |
| A21R38 | 0683-4715 | 0 | | RESISTOR 470 5% .25W CF TC=0-400 | 77902 | R-25J |
| A21R39 | 0683-1015 | 7 | 5 | RESISTOR 100 5% .25W CF TC=0-400 | 77902 | R-25J |
| A21R40 | 0683-4715 | 0 | | RESISTOR 470 5% .25W CF TC=0-400 | 77902 | R-25J |
| A21R41 | 0683-1025 | 9 | | RESISTOR 1K 5% .25W CF TC=0-400 | 77902 | R-25J |
| A21R42 | 0683-1025 | 9 | | RESISTOR 1K 5% .25W CF TC=0-400 | 77902 | R-25J |
| A21R43 | 0683-1025 | 9 | | RESISTOR 1K 5% .25W CF TC=0-400 | 77902 | R-25J |
| A21R44 | 0683-1025 | 9 | | RESISTOR 1K 5% .25W CF TC=0-400 | 77902 | R-25J |
| A21R45 | 0683-1025 | 9 | | RESISTOR 1K 5% .25W CF TC=0-400 | 77902 | R-25J |
| A21R46 | 0683-1025 | 9 | | RESISTOR 1K 5% .25W CF TC=0-400 | 77902 | R-25J |
| A21R47 | 0683-1025 | 9 | | RESISTOR 1K 5% .25W CF TC=0-400 | 77902 | R-25J |
| A21R48 | 0683-4705 | 8 | | RESISTOR 47 5% .25W CF TC=0-400 | 77902 | R-25J |
| A21R49 | 0683-4705 | 8 | | RESISTOR 47 5% .25W CF TC=0-400 | 77902 | R-25J |
| A21R50 | 0683-1025 | 9 | | RESISTOR 1K 5% .25W CF TC=0-400 | 77902 | R-25J |
| A21R51 | 0683-1025 | 9 | | RESISTOR 1K 5% .25W CF TC=0-400 | 77902 | R-25J |
| A21R52 | 0683-1025 | 9 | | RESISTOR 1K 5% .25W CF TC=0-400 | 77902 | R-25J |
| A21R53 | 0683-1025 | 9 | | RESISTOR 1K 5% .25W CF TC=0-400 | 77902 | R-25J |
| A21R54 | 0683-4705 | 8 | | RESISTOR 47 5% .25W CF TC=0-400 | 77902 | R-25J |
| A21R55 | 0683-4705 | 8 | | RESISTOR 47 5% .25W CF TC=0-400 | 77902 | R-25J |
| A21R56 | 0683-1025 | 9 | | RESISTOR 1K 5% .25W CF TC=0-400 | 77902 | R-25J |
| A21R57 | 0683-1025 | 9 | | RESISTOR 1K 5% .25W CF TC=0-400 | 77902 | R-25J |
| A21R58 | 0683-4715 | 0 | | RESISTOR 470 5% .25W CF TC=0-400 | 77902 | R-25J |
| A21R59 | 0683-3905 | 8 | | RESISTOR 39 5% .25W CF TC=0-400 | 77902 | R-25J |
| A21R60 | 0683-1025 | 9 | | RESISTOR 1K 5% .25W CF TC=0-400 | 77902 | R-25J |
| A21R61 | 0683-1025 | 9 | | RESISTOR 1K 5% .25W CF TC=0-400 | 77902 | R-25J |
| A21R62 | 0683-1025 | 9 | | RESISTOR 1K 5% .25W CF TC=0-400 | 77902 | R-25J |
| A21R63 | 0683-4715 | 0 | | RESISTOR 470 5% .25W CF TC=0-400 | 77902 | R-25J |
| A21R64 | 0683-3905 | 8 | | RESISTOR 39 5% .25W CF TC=0-400 | 77902 | R-25J |
| A21R65 | 0683-1805 | 3 | | RESISTOR 18 5% .25W CF TC=0-400 | 77902 | R-25J |
| A21R66 | 0683-4705 | 8 | | RESISTOR 47 5% .25W CF TC=0-400 | 77902 | R-25J |
| A21R72 | 0683-1025 | 9 | | RESISTOR 1K 5% .25W CF TC=0-400 | 77902 | R-25J |
| A21R73 | 0683-4705 | 8 | | RESISTOR 47 5% .25W CF TC=0-400 | 77902 | R-25J |
| A21R74 | 0683-1025 | 9 | | RESISTOR 1K 5% .25W CF TC=0-400 | 77902 | R-25J |
| A21R75 | 0683-4705 | 8 | | RESISTOR 47 5% .25W CF TC=0-400 | 77902 | R-25J |
| A21R76 | 0683-4715 | 0 | | RESISTOR 470 5% .25W CF TC=0-400 | 77902 | R-25J |
| A21R77 | 0683-2225 | 3 | 2 | RESISTOR 2.2K 5% .25W CF TC=0-400 | 77902 | R-25J |
| A21R78 | 0683-1015 | 7 | | RESISTOR 100 5% .25W CF TC=0-400 | 77902 | R-25J |
| A21R79 | 0683-2215 | 1 | 2 | RESISTOR 220 5% .25W CF TC=0-400 | 77902 | R-25J |
| A21R80 | 0683-2205 | 9 | 2 | RESISTOR 22 5% .25W CF TC=0-400 | 77902 | R-25J |
| A21R81 | 0683-2205 | 9 | | RESISTOR 22 5% .25W CF TC=0-400 | 77902 | R-25J |
| A21R82 | 0683-1015 | 7 | | RESISTOR 100 5% .25W CF TC=0-400 | 77902 | R-25J |
| A21R83 | 0683-4715 | 0 | | RESISTOR 470 5% .25W CF TC=0-400 | 77902 | R-25J |
| A21R84 | 0683-4705 | 8 | | RESISTOR 47 5% .25W CF TC=0-400 | 77902 | R-25J |
| A21R85 | 0683-4715 | 0 | | RESISTOR 470 5% .25W CF TC=0-400 | 77902 | R-25J |
| A21R86 | 0683-4705 | 8 | | RESISTOR 47 5% .25W CF TC=0-400 | 77902 | R-25J |
| A21R87 | 0683-3305 | 2 | 1 | RESISTOR 33 5% .25W CF TC=0-400 | 77902 | R-25J |
| A21R88 | 0683-2225 | 3 | | RESISTOR 2.2K 5% .25W CF TC=0-400 | 77902 | R-25J |
| A21R89 | 0683-4705 | 8 | | RESISTOR 47 5% .25W CF TC=0-400 | 77902 | R-25J |
| A21R100 | 0683-4705 | 8 | | RESISTOR 47 5% .25W CF TC=0-400 | 77902 | R-25J |
| A21R101 | 0683-1025 | 9 | | RESISTOR 1K 5% .25W CF TC=0-400 | 77902 | R-25J |
| A21R102 | 0683-1025 | 9 | | RESISTOR 1K 5% .25W CF TC=0-400 | 77902 | R-25J |
| A21R103 | 0683-4705 | 8 | | RESISTOR 47 5% .25W CF TC=0-400 | 77902 | R-25J |
| A21R104 | 0683-2215 | 1 | | RESISTOR 220 5% .25W CF TC=0-400 | 77902 | R-25J |
| A21R105 | 0683-1025 | 9 | | RESISTOR 1K 5% .25W CF TC=0-400 | 77902 | R-25J |
| A21R106 | 0683-1015 | 7 | | RESISTOR 100 5% .25W CF TC=0-400 | 77902 | R-25J |

See introduction to this section for ordering information
* Indicates one of several possible values installed

# Table 9-3. Replaceable Parts

| Reference Designation | HP Part Number | C D | Qty. | Description | Mfr. Code | Mfr. Part Number |
|---|---|---|---|---|---|---|
| A21R107 | 0683-1015 | 7 | | RESISTOR 100 5% .25W CF TC=0-400 | 77902 | R-25J |
| A21R108 | 0683-2715 | 6 | 3 | RESISTOR 270 5% .25W CF TC=0-400 | 77902 | R-25J |
| A21R109 | 0683-3315 | 4 | | RESISTOR 330 5% .25W CF TC=0-400 | 77902 | R-25J |
| A21R110 | 0683-1025 | 9 | | RESISTOR 1K 5% .25W CF TC=0-400 | 77902 | R-25J |
| A21R111 | 0683-2715 | 6 | | RESISTOR 270 5% .25W CF TC=0-400 | 77902 | R-25J |
| A21R112 | 0683-6825 | 7 | 1 | RESISTOR 6.8K 5% .25W CF TC=0-400 | 77902 | R-25J |
| A21R113 | 0683-2715 | 6 | | RESISTOR 270 5% .25W CF TC=0-400 | 77902 | R-25J |
| A21R114 | 0683-1025 | 9 | | RESISTOR 1K 5% .25W CF TC=0-400 | 77902 | R-25J |
| A21R115 | 0683-3315 | 4 | | RESISTOR 330 5% .25W CF TC=0-400 | 77902 | R-25J |
| A21R116 | 0683-1515 | 2 | 1 | RESISTOR 150 5% .25W CF TC=0-400 | 77902 | R-25J |
| A21R117 | 0683-4715 | 0 | | RESISTOR 470 5% .25W CF TC=0-400 | 77902 | R-25J |
| A21R118 | 0683-4715 | 0 | | RESISTOR 470 5% .25W CF TC=0-400 | 77902 | R-25J |
| A21R119 | 0683-1025 | 9 | | RESISTOR 1K 5% .25W CF TC=0-400 | 77902 | R-25J |
| A21R120 | 0683-1025 | 9 | | RESISTOR 1K 5% .25W CF TC=0-400 | 77902 | R-25J |
| A21R121 | 0683-6805 | 3 | 1 | RESISTOR 68 5% .25W CF TC=0-400 | 77902 | R-25J |
| A21R122 | 0683-2245 | 7 | 3 | RESISTOR 220K 5% .25W CF TC=0-800 | 77902 | R-25J |
| A21R123 | 0683-1045 | 3 | 1 | RESISTOR 100K 5% .25W CF TC=0-400 | 77902 | R-25J |
| A21R124 | 0698-4486 | 3 | 2 | RESISTOR 24.9K 1% .125W F TC=0+-100 | 91637 | CMF-55-1, T-1 |
| A21R125 | 2100-3274 | 2 | 1 | RESISTOR-TRMR 10K 10% C SIDE-ADJ 1-TRN | 32997 | 3386X-Y46-103 |
| A21R126 | 0698-3228 | 9 | 1 | RESISTOR 49.9K 1% .125W F TC=0+-100 | 19701 | SFR25H |
| A21R127 | 0683-1055 | 5 | 3 | RESISTOR 1M 5% .25W CF TC=0-800 | 77902 | R-25J |
| A21R128 | 0683-1055 | 5 | | RESISTOR 1M 5% .25W CF TC=0-800 | 77902 | R-25J |
| A21R129 | 0683-2735 | 0 | 1 | RESISTOR 27K 5% .25W CF TC=0-400 | 77902 | R-25J |
| A21R130 | 0683-2245 | 7 | | RESISTOR 220K 5% .25W CF TC=0-800 | 77902 | R-25J |
| A21R131 | 0683-1025 | 9 | | RESISTOR 1K 5% .25W CF TC=0-400 | 77902 | R-25J |
| A21R132 | 0683-1025 | 9 | | RESISTOR 1K 5% .25W CF TC=0-400 | 77902 | R-25J |
| A21R133 | 0683-2245 | 7 | | RESISTOR 220K 5% .25W CF TC=0-800 | 77902 | R-25J |
| A21R134 | 0683-1055 | 5 | | RESISTOR 1M 5% .25W CF TC=0-800 | 77902 | R-25J |
| A21R135 | 0698-4486 | 3 | | RESISTOR 24.9K 1% .125W F TC=0+-100 | 91637 | CMF-55-1, T-1 |
| A21R136 | 0757-0270 | 1 | 1 | RESISTOR 249K 1% .125W F TC=0+-100 | 19701 | SFR25H |
| A21R140 | 0683-4715 | 0 | | RESISTOR 470 5% .25W CF TC=0-400 | 77902 | R-25J |
| A21T1 | 9100-4039 | 6 | 1 | TRANSFORMER-POWER | 07797P01 | 9100-4039 |
| A21T2 | 08552-6044 | 1 | 2 | XFC TOROID BAL | 28480 | 08552-6044 |
| A21T3 | 08552-6044 | 1 | | XFC TOROID BAL | 28480 | 08552-6044 |
| A21TP1 | 1251-0600 | 0 | 25 | CONNECTOR-SGL CONT PIN 1.14-MM-BSC-SZ SQ27264 | 27264 | 16-06-0034 |
| A21TP2 | 1251-0600 | 0 | | CONNECTOR-SGL CONT PIN 1.14-MM-BSC-SZ SQ27264 | 27264 | 16-06-0034 |
| A21TP3 | 1251-0600 | 0 | | CONNECTOR-SGL CONT PIN 1.14-MM-BSC-SZ SQ27264 | 27264 | 16-06-0034 |
| A21TP4 | 1251-0600 | 0 | | CONNECTOR-SGL CONT PIN 1.14-MM-BSC-SZ SQ27264 | 27264 | 16-06-0034 |
| A21TP5 | 1251-0600 | 0 | | CONNECTOR-SGL CONT PIN 1.14-MM-BSC-SZ SQ27264 | 27264 | 16-06-0034 |
| A21TP6 | 1251-0600 | 0 | | CONNECTOR-SGL CONT PIN 1.14-MM-BSC-SZ SQ27264 | 27264 | 16-06-0034 |
| A21TP7 | 1251-0600 | 0 | | CONNECTOR-SGL CONT PIN 1.14-MM-BSC-SZ SQ27264 | 27264 | 16-06-0034 |
| A21TP8 | 1251-0600 | 0 | | CONNECTOR-SGL CONT PIN 1.14-MM-BSC-SZ SQ27264 | 27264 | 16-06-0034 |
| A21TP9 | 1251-0600 | 0 | | CONNECTOR-SGL CONT PIN 1.14-MM-BSC-SZ SQ27264 | 27264 | 16-06-0034 |
| A21TP10 | 1251-0600 | 0 | | CONNECTOR-SGL CONT PIN 1.14-MM-BSC-SZ SQ27264 | 27264 | 16-06-0034 |
| A21TP11 | 1251-0600 | 0 | | CONNECTOR-SGL CONT PIN 1.14-MM-BSC-SZ SQ27264 | 27264 | 16-06-0034 |
| A21TP12 | 1251-0600 | 0 | | CONNECTOR-SGL CONT PIN 1.14-MM-BSC-SZ SQ27264 | 27264 | 16-06-0034 |
| A21TP13 | 1251-0600 | 0 | | CONNECTOR-SGL CONT PIN 1.14-MM-BSC-SZ SQ27264 | 27264 | 16-06-0034 |
| A21TP14 | 1251-0600 | 0 | | CONNECTOR-SGL CONT PIN 1.14-MM-BSC-SZ SQ27264 | 27264 | 16-06-0034 |
| A21TP15 | 1251-0600 | 0 | | CONNECTOR-SGL CONT PIN 1.14-MM-BSC-SZ SQ27264 | 27264 | 16-06-0034 |
| A21TP16 | 1251-0600 | 0 | | CONNECTOR-SGL CONT PIN 1.14-MM-BSC-SZ SQ27264 | 27264 | 16-06-0034 |
| A21TP17 | 1251-0600 | 0 | | CONNECTOR-SGL CONT PIN 1.14-MM-BSC-SZ SQ27264 | 27264 | 16-06-0034 |
| A21TP18 | 1251-0600 | 0 | | CONNECTOR-SGL CONT PIN 1.14-MM-BSC-SZ SQ27264 | 27264 | 16-06-0034 |
| A21TP19 | 1251-0600 | 0 | | CONNECTOR-SGL CONT PIN 1.14-MM-BSC-SZ SQ27264 | 27264 | 16-06-0034 |
| A21TP20 | 1251-0600 | 0 | | CONNECTOR-SGL CONT PIN 1.14-MM-BSC-SZ SQ27264 | 27264 | 16-06-0034 |
| A21TP21 | 1251-0600 | 0 | | CONNECTOR-SGL CONT PIN 1.14-MM-BSC-SZ SQ27264 | 27264 | 16-06-0034 |
| A21TP22 | 1251-0600 | 0 | | CONNECTOR-SGL CONT PIN 1.14-MM-BSC-SZ SQ27264 | 27264 | 16-06-0034 |
| A21TP23 | 1251-0600 | 0 | | CONNECTOR-SGL CONT PIN 1.14-MM-BSC-SZ SQ27264 | 27264 | 16-06-0034 |
| A21TP24 | 1251-0600 | 0 | | CONNECTOR-SGL CONT PIN 1.14-MM-BSC-SZ SQ27264 | 27264 | 16-06-0034 |
| A21TP25 | 1251-0600 | 0 | | CONNECTOR-SGL CONT PIN 1.14-MM-BSC-SZ SQ27264 | 27264 | 16-06-0034 |
| A21U1 | 1820-0810 | 1 | 2 | IC RCVR ECL LINE RCVR TPL 2-INP | 04713 | |
| A21U2 | 1820-0806 | 5 | 9 | IC GATE ECL OR-NOR DUAL 4-5-INP | 04713 | |
| A21U3 | 1820-0806 | 5 | | IC GATE ECL OR-NOR DUAL 4-5-INP | 04713 | |
| A21U4 | 1820-0806 | 5 | | IC GATE ECL OR-NOR DUAL 4-5-INP | 04713 | |
| A21U5 | 1820-0806 | 5 | | IC GATE ECL OR-NOR DUAL 4-5-INP | 04713 | |
| A21U6 | 1820-0817 | 8 | 2 | IC FF ECL D-M/S DUAL | 04713 | |

See introduction to this section for ordering information
* Indicates one of several possible values installed

# Table 9-3. Replaceable Parts

| Reference Designation | HP Part Number | C D | Qty. | Description | Mfr. Code | Mfr. Part Number |
|---|---|---|---|---|---|---|
| A21U7 | 1820-0817 | 8 | | IC FF ECL D-M/S DUAL | 04713 | |
| A21U8 | 1820-0806 | 5 | | IC GATE ECL OR-NOR DUAL 4-5-INP | 04713 | |
| A21U9 | 1820-0810 | 1 | | IC RCVR ECL LINE RCVR TPL 2-INP | 04713 | |
| A21U10 | 1820-0806 | 5 | | IC GATE ECL OR-NOR DUAL 4-5-INP | 04713 | |
| A21U11 | 1820-0806 | 5 | | IC GATE ECL OR-NOR DUAL 4-5-INP | 04713 | |
| A21U12 | 1820-0806 | 5 | | IC GATE ECL OR-NOR DUAL 4-5-INP | 04713 | |
| A21U13 | 1820-0806 | 5 | | IC GATE ECL OR-NOR DUAL 4-5-INP | 04713 | |
| A21U14 | 1820-0803 | 2 | 2 | IC GATE ECL OR-NOR TPL | 04713 | |
| A21U15 | 1820-0693 | 8 | 1 | IC FF TTL S D-TYPE POS-EDGE-TRIG | 01295 | |
| A21U16 | 1820-1442 | 7 | 2 | IC CNTR TTL LS DECD ASYNCHRO | 01295 | |
| A21U17 | 1820-1442 | 7 | | IC CNTR TTL LS DECD ASYNCHRO | 01295 | |
| A21U18 | 1820-0686 | 9 | 1 | IC GATE TTL S AND TPL 3-INP | 01295 | |
| A21U23 | 1820-0803 | 2 | | IC GATE ECL OR-NOR TPL | 04713 | |
| A21U24 | 1826-0111 | 7 | 1 | IC OP AMP GP DUAL TO-99 PKG | 04713 | |
| A21U25 | 1826-0065 | 0 | 1 | IC COMPARATOR PRCN 8-DIP-P PKG | 27014 | |
| A21Y1 | 0410-1141 | 3 | 1 | CRYSTAL-QUARTZ 89.99720 MHZ | 33096 | |
| | 7121-4611 | 2 | 1 | LABEL-INFORMATION .15-IN-WD .6-IN-LG | 28480 | L01003 |
| **A22** | **03585-66522** | **7** | **1** | **1ST LO VTO PC BD ASSEMBLY** | **28480** | **03585-66522** |
| A22C1 | 0150-0050 | 9 | 20 | CAPACITOR-FXD 1000PF +80-20% 1KVDC CER | 59660 | 838-557-X5R-102Z |
| A22C2 | 0150-0050 | 9 | | CAPACITOR-FXD 1000PF +80-20% 1KVDC CER | 59660 | 838-557-X5R-102Z |
| A22C3 | 0160-5408 | 2 | 3 | CAPACITOR-FXD 75PF +-5% 100VDC CER 0+-3028480 | 28480 | RPA10COG750J100 |
| A22C4 | 0160-5408 | 2 | | CAPACITOR-FXD 75PF +-5% 100VDC CER 0+-3028480 | 28480 | RPA10COG750J100 |
| A22C5 | 0160-5408 | 2 | | CAPACITOR-FXD 75PF +-5% 100VDC CER 0+-3028480 | 28480 | RPA10COG750J100 |
| A22C7 | 0150-0050 | 9 | | CAPACITOR-FXD 1000PF +80-20% 1KVDC CER | 59660 | 838-557-X5R-102Z |
| A22C8 | 0150-0050 | 9 | | CAPACITOR-FXD 1000PF +80-20% 1KVDC CER | 59660 | 838-557-X5R-102Z |
| A22C9 | 0160-2199 | 2 | 1 | CAPACITOR-FXD 30PF +-5% 300VDC MICA | 00853 | |
| A22C10 | 0150-0050 | 9 | | CAPACITOR-FXD 1000PF +80-20% 1KVDC CER | 59660 | 838-557-X5R-102Z |
| A22C13 | 0160-2204 | 0 | 1 | CAPACITOR-FXD 100PF +-5% 300VDC MICA | 00853 | D153F101J |
| A22C14 | 0150-0050 | 9 | | CAPACITOR-FXD 1000PF +80-20% 1KVDC CER | 59660 | 838-557-X5R-102Z |
| A22C15 | 0150-0050 | 9 | | CAPACITOR-FXD 1000PF +80-20% 1KVDC CER | 59660 | 838-557-X5R-102Z |
| A22C16 | 0150-0050 | 9 | | CAPACITOR-FXD 1000PF +80-20% 1KVDC CER | 59660 | 838-557-X5R-102Z |
| A22C17 | 0150-0050 | 9 | | CAPACITOR-FXD 1000PF +80-20% 1KVDC CER | 59660 | 838-557-X5R-102Z |
| A22C18 | 0150-0050 | 9 | | CAPACITOR-FXD 1000PF +80-20% 1KVDC CER | 59660 | 838-557-X5R-102Z |
| A22C19 | 0150-0050 | 9 | | CAPACITOR-FXD 1000PF +80-20% 1KVDC CER | 59660 | 838-557-X5R-102Z |
| A22C20 | 0150-0050 | 9 | | CAPACITOR-FXD 1000PF +80-20% 1KVDC CER | 59660 | 838-557-X5R-102Z |
| A22C21 | 0150-0050 | 9 | | CAPACITOR-FXD 1000PF +80-20% 1KVDC CER | 59660 | 838-557-X5R-102Z |
| A22C22 | 0150-0050 | 9 | | CAPACITOR-FXD 1000PF +80-20% 1KVDC CER | 59660 | 838-557-X5R-102Z |
| A22C23 | 0150-0050 | 9 | | CAPACITOR-FXD 1000PF +80-20% 1KVDC CER | 59660 | 838-557-X5R-102Z |
| A22C24 | 0150-0050 | 9 | | CAPACITOR-FXD 1000PF +80-20% 1KVDC CER | 59660 | 838-557-X5R-102Z |
| A22C25 | 0150-0050 | 9 | | CAPACITOR-FXD 1000PF +80-20% 1KVDC CER | 59660 | 838-557-X5R-102Z |
| A22C26 | 0150-0050 | 9 | | CAPACITOR-FXD 1000PF +80-20% 1KVDC CER | 59660 | 838-557-X5R-102Z |
| A22C27 | 0150-0050 | 9 | | CAPACITOR-FXD 1000PF +80-20% 1KVDC CER | 59660 | 838-557-X5R-102Z |
| A22C31 | 0160-6527 | 8 | 2 | C-F .01UF --% 100V CERDCr | 28480 | DD109N90GY5U103Z100V |
| A22C32 | 0150-0050 | 9 | | CAPACITOR-FXD 1000PF +80-20% 1KVDC CER | 59660 | 838-557-X5R-102Z |
| A22C53 | 0180-1746 | 5 | 2 | CAPACITOR-FXD 15UF+-10% 20VDC TA | 13606 | 150D156X9020B2-DYS |
| A22C54 | 0160-6527 | 8 | | C-F .01UF --% 100V CERDCr | 28480 | DD109N90GY5U103Z100V |
| A22C55 | 0180-1746 | 5 | | CAPACITOR-FXD 15UF+-10% 20VDC TA | 13606 | 150D156X9020B2-DYS |
| A22C56 | 0160-2940 | 1 | 1 | CAPACITOR-FXD 470PF +-5% 300VDC MICA | 00853 | |
| A22C57 | 0160-2207 | 3 | 1 | CAPACITOR-FXD 300PF +-5% 300VDC MICA | 00853 | |
| A22C58 | 0160-2672 | 6 | 1 | CAPACITOR-FXD .047UF +-5% 80VDC POLYE | 15766 | HEW-238T |
| A22C59 | 0160-6512 | 1 | 2 | C-F 33PF 5% 200V CERMLr | 28480 | RPE121-978C0G330J200V |
| A22C60 | 0160-6512 | 1 | | C-F 33PF 5% 200V CERMLr | 28480 | RPE121-978C0G330J200V |
| A22CR1 | 0122-0333 | 2 | 2 | DIODE-VVC 29PF 10% C3/C10-MIN=2.1 | 10978P01 | |
| A22CR2 | 0122-0333 | 2 | | DIODE-VVC 29PF 10% C3/C10-MIN=2.1 | 10978P01 | |
| A22CR3 | 1901-0535 | 9 | 1 | DIODE-SCHOTTKY SM SIG | 28480 | 1901-0535 |
| A22CR4 | 1902-3054 | 5 | 1 | DIODE-ZNR 3.65V 5% DO-35 PD=.4W | 04713 | |
| A22CR5 | 1901-0040 | 1 | 1 | DIODE-SWITCHING 30V 50MA 2NS DO-35 | 9N171 | |
| A22H1 | 03585-05222 | 6 | 1 | SHTF CVR-A22 ALSK | 28480 | 03585-05222 |
| A22H4 | 0370-2583 | 3 | 1 | MOLD KNOB-THRD F 6-32 | 04533P01 | 3001-SD |
| A22H5 | 1600-0702 | 4 | 1 | STMP SHLD-OSC BRS | 01642P01 | |
| A22H6 | 2190-0124 | 4 | 3 | WASHER-LK INTL T NO. 10 .195-IN-ID | 98291 | 3002-26 |
| A22H7 | 2190-0124 | 4 | | WASHER-LK INTL T NO. 10 .195-IN-ID | 98291 | 3002-26 |
| A22H8 | 2190-0124 | 4 | | WASHER-LK INTL T NO. 10 .195-IN-ID | 98291 | 3002-26 |

See introduction to this section for ordering information
* Indicates one of several possible values installed

# Table 9-3. Replaceable Parts

| Reference Designation | HP Part Number | C D | Qty. | Description | Mfr. Code | Mfr. Part Number |
|---|---|---|---|---|---|---|
| A22H9 | 2200-0103 | 2 | 3 | SCREW-MACH 4-40 .25-IN-LG PAN-HD-POZI | 83486 | |
| A22H10 | 2200-0103 | 2 | | SCREW-MACH 4-40 .25-IN-LG PAN-HD-POZI | 83486 | |
| A22H11 | 2200-0103 | 2 | | SCREW-MACH 4-40 .25-IN-LG PAN-HD-POZI | 83486 | |
| A22H12 | 2950-0078 | 9 | 3 | NUT-HEX-DBL-CHAM 10-32-THD .067-IN-THK | 98291 | 33002-18-00-0-156 |
| A22H13 | 2950-0078 | 9 | | NUT-HEX-DBL-CHAM 10-32-THD .067-IN-THK | 98291 | 33002-18-00-0-156 |
| A22H14 | 2950-0078 | 9 | | NUT-HEX-DBL-CHAM 10-32-THD .067-IN-THK | 98291 | 33002-18-00-0-156 |
| A22J1 | 1250-2142 | 7 | 3 | CON-SMB | 74970 | 131-3701-341 |
| A22J2 | 1250-2142 | 7 | | CON-SMB | 74970 | 131-3701-341 |
| A22J3 | 1250-2142 | 7 | | CON-SMB | 74970 | 131-3701-341 |
| A22L1 | 9100-3900 | 8 | 1 | INDUCTOR-FIXED COIL ASSY; 3 TURNS | 07797P01 | 9100-3900 |
| A22L2 | 9100-2255 | 4 | 2 | INDUCTOR RF-CH-MLD 470NH 10% .105DX.26LG24226 | 24226 | 10M470K |
| A22L3 | 9100-2255 | 4 | | INDUCTOR RF-CH-MLD 470NH 10% .105DX.26LG24226 | 24226 | 10M470K |
| A22L4 | 9100-1620 | 5 | 2 | INDUCTOR RF-CH-MLD 15UH 10% .166DX.385LG99800 | 99800 | 1537-40 |
| A22L5 | 9100-1620 | 5 | | INDUCTOR RF-CH-MLD 15UH 10% .166DX.385LG99800 | 99800 | 1537-40 |
| A22L7 | 9140-0748 | 0 | 1 | INDUCTOR 250UH 25% .25DX.5LG Q=3 | 24226 | CA-253-5 |
| A22L8 | 9140-0142 | 8 | 1 | INDUCTOR RF-CH-MLD 2.2UH 10% .105DX.26LG99800 | 99800 | 1025-28 |
| A22L10 | 9140-0131 | 5 | 1 | INDUCTOR RF-CH-MLD 10MH 5% .25DX.75LG | 99800 | 2500-76 |
| A22L11 | 9140-0210 | 1 | 1 | INDUCTOR RF-CH-MLD 100UH 5% .166DX.385LG99800 | 99800 | 1537-76 |
| A22L12 | 9100-2247 | 4 | 2 | INDUCTOR RF-CH-MLD 100NH 10% .105DX.26LG24226 | 24226 | 10M100K |
| A22L13 | 9100-2247 | 4 | | INDUCTOR RF-CH-MLD 100NH 10% .105DX.26LG24226 | 24226 | 10M100K |
| A22Q1 | 1854-0345 | 8 | 5 | TRANSISTOR NPN 2N5179 SI TO-72 PD=200MW | 04713 | |
| A22Q2 | 1854-0345 | 8 | | TRANSISTOR NPN 2N5179 SI TO-72 PD=200MW | 04713 | |
| A22Q3 | 1854-0071 | 7 | 1 | TRANSISTOR NPN SI PD=300MW FT=200MHZ | 13606 | |
| A22Q5 | 1854-0345 | 8 | | TRANSISTOR NPN 2N5179 SI TO-72 PD=200MW | 04713 | |
| A22Q6 | 1854-0686 | 0 | 4 | TRANSISTOR NPN SI TO-72 PD=200MW FT=4GHZ03334P01 | 03334P01 | |
| A22Q7 | 1854-0686 | 0 | | TRANSISTOR NPN SI TO-72 PD=200MW FT=4GHZ03334P01 | 03334P01 | |
| A22Q8 | 1854-0686 | 0 | | TRANSISTOR NPN SI TO-72 PD=200MW FT=4GHZ03334P01 | 03334P01 | |
| A22Q9 | 1854-0686 | 0 | | TRANSISTOR NPN SI TO-72 PD=200MW FT=4GHZ03334P01 | 03334P01 | |
| A22Q10 | 1854-0345 | 8 | | TRANSISTOR NPN 2N5179 SI TO-72 PD=200MW | 04713 | |
| A22Q11 | 1854-0345 | 8 | | TRANSISTOR NPN 2N5179 SI TO-72 PD=200MW | 04713 | |
| A22R1 | 0757-0401 | 0 | 1 | RESISTOR 100 1% .125W F TC=0+-100 | 19701 | SFR25H |
| A22R2 | 0683-1035 | 1 | 3 | RESISTOR 10K 5% .25W CF TC=0-400 | 77902 | R-25J |
| A22R3 | 0683-2205 | 9 | 5 | RESISTOR 22 5% .25W CF TC=0-400 | 77902 | R-25J |
| A22R4 | 0683-5125 | 8 | 1 | RESISTOR 5.1K 5% .25W CF TC=0-400 | 77902 | R-25J |
| A22R5 | 0683-1235 | 3 | 2 | RESISTOR 12K 5% .25W CF TC=0-400 | 77902 | R-25J |
| A22R6 | 0683-1235 | 3 | | RESISTOR 12K 5% .25W CF TC=0-400 | 77902 | R-25J |
| A22R7 | 0683-2205 | 9 | | RESISTOR 22 5% .25W CF TC=0-400 | 77902 | R-25J |
| A22R9 | 0683-4705 | 8 | 12 | RESISTOR 47 5% .25W CF TC=0-400 | 77902 | R-25J |
| A22R17 | 0683-1035 | 1 | | RESISTOR 10K 5% .25W CF TC=0-400 | 77902 | R-25J |
| A22R18 | 0683-4705 | 8 | | RESISTOR 47 5% .25W CF TC=0-400 | 77902 | R-25J |
| A22R19 | 0683-1035 | 1 | | RESISTOR 10K 5% .25W CF TC=0-400 | 77902 | R-25J |
| A22R20 | 0683-7515 | 4 | 1 | RESISTOR 750 5% .25W CF TC=0-400 | 77902 | R-25J |
| A22R21 | 0683-3615 | 7 | 1 | RESISTOR 360 5% .25W CF TC=0-400 | 77902 | R-25J |
| A22R22 | 0683-5615 | 1 | 1 | RESISTOR 560 5% .25W CF TC=0-400 | 77902 | R-25J |
| A22R23 | 0683-4705 | 8 | | RESISTOR 47 5% .25W CF TC=0-400 | 77902 | R-25J |
| A22R24 | 0683-5625 | 3 | 2 | RESISTOR 5.6K 5% .25W CF TC=0-400 | 77902 | R-25J |
| A22R25 | 0683-5625 | 3 | | RESISTOR 5.6K 5% .25W CF TC=0-400 | 77902 | R-25J |
| A22R26 | 0683-2725 | 8 | 4 | RESISTOR 2.7K 5% .25W CF TC=0-400 | 77902 | R-25J |
| A22R27 | 0683-4705 | 8 | | RESISTOR 47 5% .25W CF TC=0-400 | 77902 | R-25J |
| A22R28 | 0683-2725 | 8 | | RESISTOR 2.7K 5% .25W CF TC=0-400 | 77902 | R-25J |
| A22R29 | 0683-4715 | 0 | 1 | RESISTOR 470 5% .25W CF TC=0-400 | 77902 | R-25J |
| A22R30 | 0683-4705 | 8 | | RESISTOR 47 5% .25W CF TC=0-400 | 77902 | R-25J |
| A22R31 | 0683-2025 | 1 | 4 | RESISTOR 2K 5% .25W CF TC=0-400 | 77902 | R-25J |
| A22R32 | 0683-4705 | 8 | | RESISTOR 47 5% .25W CF TC=0-400 | 77902 | R-25J |
| A22R33 | 0683-2725 | 8 | | RESISTOR 2.7K 5% .25W CF TC=0-400 | 77902 | R-25J |
| A22R34 | 0683-4705 | 8 | | RESISTOR 47 5% .25W CF TC=0-400 | 77902 | R-25J |
| A22R35 | 0683-3325 | 6 | 3 | RESISTOR 3.3K 5% .25W CF TC=0-400 | 77902 | R-25J |
| A22R36 | 0683-4705 | 8 | | RESISTOR 47 5% .25W CF TC=0-400 | 77902 | R-25J |
| A22R37 | 0683-2205 | 9 | | RESISTOR 22 5% .25W CF TC=0-400 | 77902 | R-25J |
| A22R38 | 0683-2205 | 9 | | RESISTOR 22 5% .25W CF TC=0-400 | 77902 | R-25J |
| A22R39 | 0683-2215 | 1 | 1 | RESISTOR 220 5% .25W CF TC=0-400 | 77902 | R-25J |
| A22R40 | 0683-4705 | 8 | | RESISTOR 47 5% .25W CF TC=0-400 | 77902 | R-25J |
| A22R41 | 0683-2025 | 1 | | RESISTOR 2K 5% .25W CF TC=0-400 | 77902 | R-25J |
| A22R42 | 0683-4705 | 8 | | RESISTOR 47 5% .25W CF TC=0-400 | 77902 | R-25J |
| A22R43 | 0683-2725 | 8 | | RESISTOR 2.7K 5% .25W CF TC=0-400 | 77902 | R-25J |

See introduction to this section for ordering information
* Indicates one of several possible values installed

# Table 9-3. Replaceable Parts

| Reference Designation | HP Part Number | C D | Qty. | Description | Mfr. Code | Mfr. Part Number |
|---|---|---|---|---|---|---|
| A22R44 | 0683-4705 | 8 | | RESISTOR 47 5% .25W CF TC=0-400 | 77902 | R-25J |
| A22R45 | 0683-3325 | 6 | | RESISTOR 3.3K 5% .25W CF TC=0-400 | 77902 | R-25J |
| A22R46 | 0683-4705 | 8 | | RESISTOR 47 5% .25W CF TC=0-400 | 77902 | R-25J |
| A22R47 | 0683-2205 | 9 | | RESISTOR 22 5% .25W CF TC=0-400 | 77902 | R-25J |
| A22R48 | 0683-6205 | 7 | 1 | RESISTOR 62 5% .25W CF TC=0-400 | 77902 | R-25J |
| A22R49 | 0683-3315 | 4 | 1 | RESISTOR 330 5% .25W CF TC=0-400 | 77902 | R-25J |
| A22R50 | 0683-2025 | 1 | | RESISTOR 2K 5% .25W CF TC=0-400 | 77902 | R-25J |
| A22R51 | 0698-4452 | 3 | 1 | RESISTOR 374 1% .125W F TC=0+-100 | 91637 | CMF-55-1, T-1 |
| A22R52 | 0757-0450 | 9 | 1 | RESISTOR 22.1K 1% .125W F TC=0+-100 | 19701 | SFR25H |
| A22R53 | 0683-6825 | 7 | 1 | RESISTOR 6.8K 5% .25W CF TC=0-400 | 77902 | R-25J |
| A22R54 | 0683-2025 | 1 | | RESISTOR 2K 5% .25W CF TC=0-400 | 77902 | R-25J |
| A22R55 | 0698-3279 | 0 | 1 | RESISTOR 4.99K 1% .125W F TC=0+-100 | 19701 | SFR25H |
| A22R56 | 0757-0442 | 9 | 1 | RESISTOR 10K 1% .125W F TC=0+-100 | 19701 | SFR25H |
| A22R57 | 0683-3325 | 6 | | RESISTOR 3.3K 5% .25W CF TC=0-400 | 77902 | R-25J |
| A22TP1 | 1251-0600 | 0 | 2 | CONNECTOR-SGL CONT PIN 1.14-MM-BSC-SZ SQ27264 | 27264 | 16-06-0034 |
| A22TP2 | 1251-0600 | 0 | | CONNECTOR-SGL CONT PIN 1.14-MM-BSC-SZ SQ27264 | 27264 | 16-06-0034 |
| | 7121-4611 | 2 | 1 | LABEL-INFORMATION .15-IN-WD .6-IN-LG | 28480 | L01003 |
| **A23** | **03585-66523** | **8** | **1** | **STEP SYNTHESIZER VTO PC BD ASSEMBLY** | **28480** | **03585-66523** |
| A23C1 | 0150-0050 | 9 | 20 | CAPACITOR-FXD 1000PF +80-20% 1KVDC CER | 59660 | 838-557-X5R-102Z |
| A23C2 | 0150-0050 | 9 | | CAPACITOR-FXD 1000PF +80-20% 1KVDC CER | 59660 | 838-557-X5R-102Z |
| A23C3 | 0160-2199 | 2 | 2 | CAPACITOR-FXD 30PF +-5% 300VDC MICA | 00853 | |
| A23C4 | 0160-5408 | 2 | 3 | CAPACITOR-FXD 75PF +-5% 100VDC CER 0+-3028480 | 28480 | RPA10COG750J100 |
| A23C5 | 0160-5408 | 2 | | CAPACITOR-FXD 75PF +-5% 100VDC CER 0+-3028480 | 28480 | RPA10COG750J100 |
| A23C6 | 0160-5408 | 2 | | CAPACITOR-FXD 75PF +-5% 100VDC CER 0+-3028480 | 28480 | RPA10COG750J100 |
| A23C9 | 0160-2204 | 0 | 1 | CAPACITOR-FXD 100PF +-5% 300VDC MICA | 00853 | D153F101J |
| A23C10 | 0150-0050 | 9 | | CAPACITOR-FXD 1000PF +80-20% 1KVDC CER | 59660 | 838-557-X5R-102Z |
| A23C11 | 0150-0050 | 9 | | CAPACITOR-FXD 1000PF +80-20% 1KVDC CER | 59660 | 838-557-X5R-102Z |
| A23C12 | 0150-0050 | 9 | | CAPACITOR-FXD 1000PF +80-20% 1KVDC CER | 59660 | 838-557-X5R-102Z |
| A23C13 | 0150-0050 | 9 | | CAPACITOR-FXD 1000PF +80-20% 1KVDC CER | 59660 | 838-557-X5R-102Z |
| A23C14 | 0150-0050 | 9 | | CAPACITOR-FXD 1000PF +80-20% 1KVDC CER | 59660 | 838-557-X5R-102Z |
| A23C15 | 0150-0050 | 9 | | CAPACITOR-FXD 1000PF +80-20% 1KVDC CER | 59660 | 838-557-X5R-102Z |
| A23C16 | 0160-2200 | 6 | 1 | CAPACITOR-FXD 43PF +-5% 300VDC MICA | 00853 | |
| A23C17 | 0160-2199 | 2 | | CAPACITOR-FXD 30PF +-5% 300VDC MICA | 00853 | |
| A23C18 | 0150-0050 | 9 | | CAPACITOR-FXD 1000PF +80-20% 1KVDC CER | 59660 | 838-557-X5R-102Z |
| A23C19 | 0150-0050 | 9 | | CAPACITOR-FXD 1000PF +80-20% 1KVDC CER | 59660 | 838-557-X5R-102Z |
| A23C20 | 0150-0050 | 9 | | CAPACITOR-FXD 1000PF +80-20% 1KVDC CER | 59660 | 838-557-X5R-102Z |
| A23C21 | 0150-0050 | 9 | | CAPACITOR-FXD 1000PF +80-20% 1KVDC CER | 59660 | 838-557-X5R-102Z |
| A23C22 | 0150-0050 | 9 | | CAPACITOR-FXD 1000PF +80-20% 1KVDC CER | 59660 | 838-557-X5R-102Z |
| A23C23 | 0150-0050 | 9 | | CAPACITOR-FXD 1000PF +80-20% 1KVDC CER | 59660 | 838-557-X5R-102Z |
| A23C24 | 0150-0050 | 9 | | CAPACITOR-FXD 1000PF +80-20% 1KVDC CER | 59660 | 838-557-X5R-102Z |
| A23C26 | 0160-6527 | 8 | 2 | C-F .01UF --% 100V CERDCr | 28480 | DD109N90GY5U103Z100V |
| A23C27 | 0150-0050 | 9 | | CAPACITOR-FXD 1000PF +80-20% 1KVDC CER | 59660 | 838-557-X5R-102Z |
| A23C28 | 0150-0050 | 9 | | CAPACITOR-FXD 1000PF +80-20% 1KVDC CER | 59660 | 838-557-X5R-102Z |
| A23C29 | 0150-0050 | 9 | | CAPACITOR-FXD 1000PF +80-20% 1KVDC CER | 59660 | 838-557-X5R-102Z |
| A23C30 | 0180-1746 | 5 | 2 | CAPACITOR-FXD 15UF+-10% 20VDC TA | 13606 | 150D156X9020B2-DYS |
| A23C31 | 0150-0050 | 9 | | CAPACITOR-FXD 1000PF +80-20% 1KVDC CER | 59660 | 838-557-X5R-102Z |
| A23C32 | 0150-0050 | 9 | | CAPACITOR-FXD 1000PF +80-20% 1KVDC CER | 59660 | 838-557-X5R-102Z |
| A23C33 | 0160-6527 | 8 | | C-F .01UF --% 100V CERDCr | 28480 | DD109N90GY5U103Z100V |
| A23C34 | 0160-2672 | 6 | 1 | CAPACITOR-FXD .047UF +-5% 80VDC POLYE | 15766 | HEW-238T |
| A23C35 | 0140-0210 | 2 | 1 | CAPACITOR-FXD 270PF +-5% 300VDC MICA | 00853 | |
| A23C36 | 0140-0196 | 3 | 1 | CAPACITOR-FXD 150PF +-5% 300VDC MICA | 09023 | |
| A23C40 | 0180-1746 | 5 | | CAPACITOR-FXD 15UF+-10% 20VDC TA | 13606 | 150D156X9020B2-DYS |
| A23CR1 | 0122-0333 | 2 | 2 | DIODE-VVC 29PF 10% C3/C10-MIN=2.1 | 10978P01 | |
| A23CR2 | 0122-0333 | 2 | | DIODE-VVC 29PF 10% C3/C10-MIN=2.1 | 10978P01 | |
| A23CR3 | 1901-0040 | 1 | 1 | DIODE-SWITCHING 30V 50MA 2NS DO-35 | 9N171 | |
| A23CR4 | 1901-0535 | 9 | 1 | DIODE-SCHOTTKY SM SIG | 28480 | 1901-0535 |
| A23CR5 | 1902-3054 | 5 | 1 | DIODE-ZNR 3.65V 5% DO-35 PD=.4W | 04713 | |
| A23H1 | 03585-05223 | 7 | 1 | SHTF CVR-A23 ALSK | 28480 | 03585-05223 |
| A23H4 | 0370-2583 | 3 | 1 | MOLD KNOB-THRD F 6-32 | 04533P01 | 3001-SD |
| A23H5 | 1600-0702 | 4 | 1 | STMP SHLD-OSC BRS | 01642P01 | |
| A23H6 | 2190-0124 | 4 | 3 | WASHER-LK INTL T NO. 10 .195-IN-ID | 98291 | 3002-26 |
| A23H7 | 2190-0124 | 4 | | WASHER-LK INTL T NO. 10 .195-IN-ID | 98291 | 3002-26 |
| A23H8 | 2190-0124 | 4 | | WASHER-LK INTL T NO. 10 .195-IN-ID | 98291 | 3002-26 |

See introduction to this section for ordering information
* Indicates one of several possible values installed

# Table 9-3. Replaceable Parts

| Reference Designation | HP Part Number | C D | Qty. | Description | Mfr. Code | Mfr. Part Number |
|---|---|---|---|---|---|---|
| A23H9 | 2200-0103 | 2 | 3 | SCREW-MACH 4-40 .25-IN-LG PAN-HD-POZI | 83486 | |
| A23H10 | 2200-0103 | 2 | | SCREW-MACH 4-40 .25-IN-LG PAN-HD-POZI | 83486 | |
| A23H11 | 2200-0103 | 2 | | SCREW-MACH 4-40 .25-IN-LG PAN-HD-POZI | 83486 | |
| A23H12 | 2950-0078 | 9 | 3 | NUT-HEX-DBL-CHAM 10-32-THD .067-IN-THK | 98291 | 33002-18-00-0-156 |
| A23H13 | 2950-0078 | 9 | | NUT-HEX-DBL-CHAM 10-32-THD .067-IN-THK | 98291 | 33002-18-00-0-156 |
| A23H14 | 2950-0078 | 9 | | NUT-HEX-DBL-CHAM 10-32-THD .067-IN-THK | 98291 | 33002-18-00-0-156 |
| A23J1 | 1250-2142 | 7 | 3 | CON-SMB | 74970 | 131-3701-341 |
| A23J2 | 1250-2142 | 7 | | CON-SMB | 74970 | 131-3701-341 |
| A23J3 | 1250-2142 | 7 | | CON-SMB | 74970 | 131-3701-341 |
| A23L1 | 9100-3900 | 8 | 1 | INDUCTOR-FIXED COIL ASSY; 3 TURNS | 07797P01 | 9100-3900 |
| A23L2 | 9100-2255 | 4 | 2 | INDUCTOR RF-CH-MLD 470NH 10% .105DX.26LG24226 | 24226 | 10M470K |
| A23L3 | 9140-0142 | 8 | 1 | INDUCTOR RF-CH-MLD 2.2UH 10% .105DX.26LG99800 | 99800 | 1025-28 |
| A23L4 | 9100-2255 | 4 | | INDUCTOR RF-CH-MLD 470NH 10% .105DX.26LG24226 | 24226 | 10M470K |
| A23L5 | 9100-2247 | 4 | 2 | INDUCTOR RF-CH-MLD 100NH 10% .105DX.26LG24226 | 24226 | 10M100K |
| A23L6 | 9100-2247 | 4 | | INDUCTOR RF-CH-MLD 100NH 10% .105DX.26LG24226 | 24226 | 10M100K |
| A23L7 | 9100-1620 | 5 | 2 | INDUCTOR RF-CH-MLD 15UH 10% .166DX.385LG99800 | 99800 | 1537-40 |
| A23L8 | 9100-1620 | 5 | | INDUCTOR RF-CH-MLD 15UH 10% .166DX.385LG99800 | 99800 | 1537-40 |
| A23L10 | 9140-0748 | 0 | 1 | INDUCTOR 250UH 25% .25DX.5LG Q=3 | 24226 | CA-253-5 |
| A23L11 | 9140-0131 | 5 | 1 | INDUCTOR RF-CH-MLD 10MH 5% .25DX.75LG | 99800 | 2500-76 |
| A23L12 | 9100-1641 | 0 | 1 | INDUCTOR RF-CH-MLD 240UH 5% .166DX.385LG99800 | 99800 | 1537-94 |
| A23Q1 | 1854-0345 | 8 | 9 | TRANSISTOR NPN 2N5179 SI TO-72 PD=200MW | 04713 | |
| A23Q2 | 1854-0345 | 8 | | TRANSISTOR NPN 2N5179 SI TO-72 PD=200MW | 04713 | |
| A23Q3 | 1854-0345 | 8 | | TRANSISTOR NPN 2N5179 SI TO-72 PD=200MW | 04713 | |
| A23Q4 | 1854-0345 | 8 | | TRANSISTOR NPN 2N5179 SI TO-72 PD=200MW | 04713 | |
| A23Q5 | 1854-0345 | 8 | | TRANSISTOR NPN 2N5179 SI TO-72 PD=200MW | 04713 | |
| A23Q6 | 1854-0345 | 8 | | TRANSISTOR NPN 2N5179 SI TO-72 PD=200MW | 04713 | |
| A23Q7 | 1854-0345 | 8 | | TRANSISTOR NPN 2N5179 SI TO-72 PD=200MW | 04713 | |
| A23Q8 | 1854-0345 | 8 | | TRANSISTOR NPN 2N5179 SI TO-72 PD=200MW | 04713 | |
| A23Q9 | 1854-0345 | 8 | | TRANSISTOR NPN 2N5179 SI TO-72 PD=200MW | 04713 | |
| A23Q10 | 1854-0071 | 7 | 1 | TRANSISTOR NPN SI PD=300MW FT=200MHZ | 13606 | |
| A23R1 | 0683-1035 | 1 | 3 | RESISTOR 10K 5% .25W CF TC=0-400 | 77902 | R-25J |
| A23R2 | 0683-2205 | 9 | 4 | RESISTOR 22 5% .25W CF TC=0-400 | 77902 | R-25J |
| A23R3 | 0683-5125 | 8 | 1 | RESISTOR 5.1K 5% .25W CF TC=0-400 | 77902 | R-25J |
| A23R4 | 0683-1235 | 3 | 2 | RESISTOR 12K 5% .25W CF TC=0-400 | 77902 | R-25J |
| A23R5 | 0683-1235 | 3 | | RESISTOR 12K 5% .25W CF TC=0-400 | 77902 | R-25J |
| A23R6 | 0683-2205 | 9 | | RESISTOR 22 5% .25W CF TC=0-400 | 77902 | R-25J |
| A23R7 | 0683-2025 | 1 | 4 | RESISTOR 2K 5% .25W CF TC=0-400 | 77902 | R-25J |
| A23R8 | 0757-0401 | 0 | 1 | RESISTOR 100 1% .125W F TC=0+-100 | 19701 | SFR25H |
| A23R9 | 0683-4705 | 8 | 14 | RESISTOR 47 5% .25W CF TC=0-400 | 77902 | R-25J |
| A23R10 | 0683-1035 | 1 | | RESISTOR 10K 5% .25W CF TC=0-400 | 77902 | R-25J |
| A23R11 | 0683-1035 | 1 | | RESISTOR 10K 5% .25W CF TC=0-400 | 77902 | R-25J |
| A23R12 | 0683-4705 | 8 | | RESISTOR 47 5% .25W CF TC=0-400 | 77902 | R-25J |
| A23R13 | 0683-7515 | 4 | 1 | RESISTOR 750 5% .25W CF TC=0-400 | 77902 | R-25J |
| A23R14 | 0683-1015 | 7 | 1 | RESISTOR 100 5% .25W CF TC=0-400 | 77902 | R-25J |
| A23R15 | 0683-5615 | 1 | 1 | RESISTOR 560 5% .25W CF TC=0-400 | 77902 | R-25J |
| A23R16 | 0683-4705 | 8 | | RESISTOR 47 5% .25W CF TC=0-400 | 77902 | R-25J |
| A23R17 | 0683-5625 | 3 | 2 | RESISTOR 5.6K 5% .25W CF TC=0-400 | 77902 | R-25J |
| A23R18 | 0683-5625 | 3 | | RESISTOR 5.6K 5% .25W CF TC=0-400 | 77902 | R-25J |
| A23R19 | 0683-3315 | 4 | 3 | RESISTOR 330 5% .25W CF TC=0-400 | 77902 | R-25J |
| A23R20 | 0683-2725 | 8 | 3 | RESISTOR 2.7K 5% .25W CF TC=0-400 | 77902 | R-25J |
| A23R21 | 0683-4705 | 8 | | RESISTOR 47 5% .25W CF TC=0-400 | 77902 | R-25J |
| A23R22 | 0683-4715 | 0 | 1 | RESISTOR 470 5% .25W CF TC=0-400 | 77902 | R-25J |
| A23R23 | 0683-4705 | 8 | | RESISTOR 47 5% .25W CF TC=0-400 | 77902 | R-25J |
| A23R24 | 0683-2025 | 1 | | RESISTOR 2K 5% .25W CF TC=0-400 | 77902 | R-25J |
| A23R25 | 0683-4705 | 8 | | RESISTOR 47 5% .25W CF TC=0-400 | 77902 | R-25J |
| A23R26 | 0683-2725 | 8 | | RESISTOR 2.7K 5% .25W CF TC=0-400 | 77902 | R-25J |
| A23R27 | 0683-4705 | 8 | | RESISTOR 47 5% .25W CF TC=0-400 | 77902 | R-25J |
| A23R28 | 0683-3325 | 6 | 3 | RESISTOR 3.3K 5% .25W CF TC=0-400 | 77902 | R-25J |
| A23R29 | 0683-4705 | 8 | | RESISTOR 47 5% .25W CF TC=0-400 | 77902 | R-25J |
| A23R30 | 0683-2205 | 9 | | RESISTOR 22 5% .25W CF TC=0-400 | 77902 | R-25J |
| A23R31 | 0683-4705 | 8 | | RESISTOR 47 5% .25W CF TC=0-400 | 77902 | R-25J |
| A23R32 | 0683-3315 | 4 | | RESISTOR 330 5% .25W CF TC=0-400 | 77902 | R-25J |
| A23R33 | 0683-4705 | 8 | | RESISTOR 47 5% .25W CF TC=0-400 | 77902 | R-25J |
| A23R34 | 0683-2025 | 1 | | RESISTOR 2K 5% .25W CF TC=0-400 | 77902 | R-25J |
| A23R35 | 0683-4705 | 8 | | RESISTOR 47 5% .25W CF TC=0-400 | 77902 | R-25J |

See introduction to this section for ordering information
* Indicates one of several possible values installed

# Table 9-3. Replaceable Parts

| Reference Designation | HP Part Number | C D | Qty. | Description | Mfr. Code | Mfr. Part Number |
|---|---|---|---|---|---|---|
| A23R36 | 0683-2725 | 8 | | RESISTOR 2.7K 5% .25W CF TC=0-400 | 77902 | R-25J |
| A23R37 | 0683-4705 | 8 | | RESISTOR 47 5% .25W CF TC=0-400 | 77902 | R-25J |
| A23R38 | 0683-3325 | 6 | | RESISTOR 3.3K 5% .25W CF TC=0-400 | 77902 | R-25J |
| A23R39 | 0683-4705 | 8 | | RESISTOR 47 5% .25W CF TC=0-400 | 77902 | R-25J |
| A23R40 | 0683-2205 | 9 | | RESISTOR 22 5% .25W CF TC=0-400 | 77902 | R-25J |
| A23R41 | 0683-4705 | 8 | | RESISTOR 47 5% .25W CF TC=0-400 | 77902 | R-25J |
| A23R42 | 0683-3315 | 4 | | RESISTOR 330 5% .25W CF TC=0-400 | 77902 | R-25J |
| A23R50 | 0757-0446 | 3 | 1 | RESISTOR 15K 1% .125W F TC=0+-100 | 19701 | SFR25H |
| A23R51 | 0698-4452 | 3 | 1 | RESISTOR 374 1% .125W F TC=0+-100 | 91637 | CMF-55-1, T-1 |
| A23R52 | 0683-2025 | 1 | | RESISTOR 2K 5% .25W CF TC=0-400 | 77902 | R-25J |
| A23R53 | 0683-3325 | 6 | | RESISTOR 3.3K 5% .25W CF TC=0-400 | 77902 | R-25J |
| A23R54 | 0698-3155 | 1 | 1 | RESISTOR 4.64K 1% .125W F TC=0+-100 | 19701 | SFR25H |
| A23R55 | 0698-4477 | 2 | 1 | RESISTOR 10.5K 1% .125W F TC=0+-100 | 91637 | CMF-55-1, T-1 |
| A23R56 | 0683-6825 | 7 | 1 | RESISTOR 6.8K 5% .25W CF TC=0-400 | 77902 | R-25J |
| A23TP1 | 1251-0600 | 0 | 2 | CONNECTOR-SGL CONT PIN 1.14-MM-BSC-SZ SQ27264 | 27264 | 16-06-0034 |
| A23TP2 | 1251-0600 | 0 | | CONNECTOR-SGL CONT PIN 1.14-MM-BSC-SZ SQ27264 | 27264 | 16-06-0034 |
| | 7121-4611 | 2 | 1 | LABEL-INFORMATION .15-IN-WD .6-IN-LG | 28480 | L01003 |
| **A24** | **03585-66524** | **9** | **1** | **1ST LO BUFFER PC BD ASSEMBLY** | **28480** | **03585-66524** |
| A24C1 | 0150-0050 | 9 | 18 | CAPACITOR-FXD 1000PF +80-20% 1KVDC CER | 59660 | 838-557-X5R-102Z |
| A24C2 | 0150-0050 | 9 | | CAPACITOR-FXD 1000PF +80-20% 1KVDC CER | 59660 | 838-557-X5R-102Z |
| A24C3 | 0150-0050 | 9 | | CAPACITOR-FXD 1000PF +80-20% 1KVDC CER | 59660 | 838-557-X5R-102Z |
| A24C4 | 0150-0050 | 9 | | CAPACITOR-FXD 1000PF +80-20% 1KVDC CER | 59660 | 838-557-X5R-102Z |
| A24C5 | 0150-0050 | 9 | | CAPACITOR-FXD 1000PF +80-20% 1KVDC CER | 59660 | 838-557-X5R-102Z |
| A24C6 | 0150-0050 | 9 | | CAPACITOR-FXD 1000PF +80-20% 1KVDC CER | 59660 | 838-557-X5R-102Z |
| A24C7 | 0150-0050 | 9 | | CAPACITOR-FXD 1000PF +80-20% 1KVDC CER | 59660 | 838-557-X5R-102Z |
| A24C8 | 0150-0050 | 9 | | CAPACITOR-FXD 1000PF +80-20% 1KVDC CER | 59660 | 838-557-X5R-102Z |
| A24C9 | 0150-0050 | 9 | | CAPACITOR-FXD 1000PF +80-20% 1KVDC CER | 59660 | 838-557-X5R-102Z |
| A24C10 | 0150-0050 | 9 | | CAPACITOR-FXD 1000PF +80-20% 1KVDC CER | 59660 | 838-557-X5R-102Z |
| A24C11 | 0150-0050 | 9 | | CAPACITOR-FXD 1000PF +80-20% 1KVDC CER | 59660 | 838-557-X5R-102Z |
| A24C12 | 0150-0050 | 9 | | CAPACITOR-FXD 1000PF +80-20% 1KVDC CER | 59660 | 838-557-X5R-102Z |
| A24C14 | 0150-0050 | 9 | | CAPACITOR-FXD 1000PF +80-20% 1KVDC CER | 59660 | 838-557-X5R-102Z |
| A24C15 | 0150-0050 | 9 | | CAPACITOR-FXD 1000PF +80-20% 1KVDC CER | 59660 | 838-557-X5R-102Z |
| A24C16 | 0150-0050 | 9 | | CAPACITOR-FXD 1000PF +80-20% 1KVDC CER | 59660 | 838-557-X5R-102Z |
| A24C17 | 0150-0050 | 9 | | CAPACITOR-FXD 1000PF +80-20% 1KVDC CER | 59660 | 838-557-X5R-102Z |
| A24C18 | 0150-0050 | 9 | | CAPACITOR-FXD 1000PF +80-20% 1KVDC CER | 59660 | 838-557-X5R-102Z |
| A24C19 | 0180-1746 | 5 | 1 | CAPACITOR-FXD 15UF+-10% 20VDC TA | 13606 | 150D156X9020B2-DYS |
| A24C20 | 0160-6509 | 6 | 1 | C-F .1UF --% 100V CERMLr | 28480 | RPE122-977Z5U104Z100V |
| A24C21 | 0160-2200 | 6 | 2 | CAPACITOR-FXD 43PF +-5% 300VDC MICA | 00853 | |
| A24C22 | 0160-2200 | 6 | | CAPACITOR-FXD 43PF +-5% 300VDC MICA | 00853 | |
| A24C23 | 0160-6511 | 0 | 5 | C-F 15PF 5% 200V CERMLr | 28480 | RPE121-978C0G150J200V |
| A24C24 | 0160-6511 | 0 | | C-F 15PF 5% 200V CERMLr | 28480 | RPE121-978C0G150J200V |
| A24C25 | 0160-4382 | 9 | 1 | CAPACITOR-FXD 3.3PF +-.25PF 200VDC CER | 28480 | RPE111-120C0G3R3C200V |
| A24C26 | 0160-6511 | 0 | | C-F 15PF 5% 200V CERMLr | 28480 | RPE121-978C0G150J200V |
| A24C27 | 0160-6508 | 5 | 1 | C-F 22PF 5% 200V CERMLr | 28480 | RPE121-978C0G220J200V |
| A24C29 | 0150-0050 | 9 | | CAPACITOR-FXD 1000PF +80-20% 1KVDC CER | 59660 | 838-557-X5R-102Z |
| A24C30 | 0160-6527 | 8 | 1 | C-F .01UF --% 100V CERDCr | 28480 | DD109N90GY5U103Z100V |
| A24C31 | 0160-6512 | 1 | 2 | C-F 33PF 5% 200V CERMLr | 28480 | RPE121-978C0G330J200V |
| A24C32 | 0160-6512 | 1 | | C-F 33PF 5% 200V CERMLr | 28480 | RPE121-978C0G330J200V |
| A24C33 | 0160-6511 | 0 | | C-F 15PF 5% 200V CERMLr | 28480 | RPE121-978C0G150J200V |
| A24C34 | 0160-6511 | 0 | | C-F 15PF 5% 200V CERMLr | 28480 | RPE121-978C0G150J200V |
| A24CR1 | 1901-0040 | 1 | 1 | DIODE-SWITCHING 30V 50MA 2NS DO-35 | 9N171 | |
| A24H1 | 03585-05224 | 8 | 1 | SHTF CVR-A24 ALSK | 28480 | 03585-05224 |
| A24H2 | 0370-2583 | 3 | 1 | MOLD KNOB-THRD F 6-32 | 04533P01 | 3001-SD |
| A24H3 | 2190-0124 | 4 | 4 | WASHER-LK INTL T NO. 10 .195-IN-ID | 98291 | 3002-26 |
| A24H4 | 2190-0124 | 4 | | WASHER-LK INTL T NO. 10 .195-IN-ID | 98291 | 3002-26 |
| A24H5 | 2190-0124 | 4 | | WASHER-LK INTL T NO. 10 .195-IN-ID | 98291 | 3002-26 |
| A24H6 | 2190-0124 | 4 | | WASHER-LK INTL T NO. 10 .195-IN-ID | 98291 | 3002-26 |
| A24H7 | 2200-0103 | 2 | 4 | SCREW-MACH 4-40 .25-IN-LG PAN-HD-POZI | 83486 | |
| A24H8 | 2200-0103 | 2 | | SCREW-MACH 4-40 .25-IN-LG PAN-HD-POZI | 83486 | |
| A24H9 | 2200-0103 | 2 | | SCREW-MACH 4-40 .25-IN-LG PAN-HD-POZI | 83486 | |
| A24H10 | 2200-0103 | 2 | | SCREW-MACH 4-40 .25-IN-LG PAN-HD-POZI | 83486 | |
| A24H11 | 2950-0078 | 9 | 4 | NUT-HEX-DBL-CHAM 10-32-THD .067-IN-THK | 98291 | 33002-18-00-0-156 |
| A24H12 | 2950-0078 | 9 | | NUT-HEX-DBL-CHAM 10-32-THD .067-IN-THK | 98291 | 33002-18-00-0-156 |

See introduction to this section for ordering information
* Indicates one of several possible values installed

# Table 9-3. Replaceable Parts

| Reference Designation | HP Part Number | C D | Qty. | Description | Mfr. Code | Mfr. Part Number |
|---|---|---|---|---|---|---|
| A24H13 | 2950-0078 | 9 | | NUT-HEX-DBL-CHAM 10-32-THD .067-IN-THK | 98291 | 33002-18-00-0-156 |
| A24H14 | 2950-0078 | 9 | | NUT-HEX-DBL-CHAM 10-32-THD .067-IN-THK | 98291 | 33002-18-00-0-156 |
| A24J1 | 1250-2142 | 7 | 4 | CON-SMB | 74970 | 131-3701-341 |
| A24J2 | 1250-2142 | 7 | | CON-SMB | 74970 | 131-3701-341 |
| A24J3 | 1250-2142 | 7 | | CON-SMB | 74970 | 131-3701-341 |
| A24J4 | 1250-2142 | 7 | | CON-SMB | 74970 | 131-3701-341 |
| A24L1 | 9100-1620 | 5 | 4 | INDUCTOR RF-CH-MLD 15UH 10% .166DX.385LG99800 | 99800 | 1537-40 |
| A24L2 | 9100-1620 | 5 | | INDUCTOR RF-CH-MLD 15UH 10% .166DX.385LG99800 | 99800 | 1537-40 |
| A24L3 | 9100-1620 | 5 | | INDUCTOR RF-CH-MLD 15UH 10% .166DX.385LG99800 | 99800 | 1537-40 |
| A24L4 | 9100-1620 | 5 | | INDUCTOR RF-CH-MLD 15UH 10% .166DX.385LG99800 | 99800 | 1537-40 |
| A24L5 | 9140-0748 | 0 | 1 | INDUCTOR 250UH 25% .25DX.5LG Q=3 | 24226 | CA-253-5 |
| A24L6 | 9100-2247 | 4 | 7 | INDUCTOR RF-CH-MLD 100NH 10% .105DX.26LG24226 | 24226 | 10M100K |
| A24L7 | 9100-2247 | 4 | | INDUCTOR RF-CH-MLD 100NH 10% .105DX.26LG24226 | 24226 | 10M100K |
| A24L8 | 9100-2247 | 4 | | INDUCTOR RF-CH-MLD 100NH 10% .105DX.26LG24226 | 24226 | 10M100K |
| A24L9 | 9100-2247 | 4 | | INDUCTOR RF-CH-MLD 100NH 10% .105DX.26LG24226 | 24226 | 10M100K |
| A24L10 | 9100-2247 | 4 | | INDUCTOR RF-CH-MLD 100NH 10% .105DX.26LG24226 | 24226 | 10M100K |
| A24L11 | 9100-2249 | 6 | 1 | INDUCTOR RF-CH-MLD 150NH 10% .105DX.26LG24226 | 24226 | 10M150K |
| A24L12 | 9140-0158 | 6 | 2 | INDUCTOR RF-CH-MLD 1UH 10% .105DX.26LG | 32159 | 1A1002M +-10% |
| A24L13 | 9140-0158 | 6 | | INDUCTOR RF-CH-MLD 1UH 10% .105DX.26LG | 32159 | 1A1002M +-10% |
| A24L14 | 9100-2247 | 4 | | INDUCTOR RF-CH-MLD 100NH 10% .105DX.26LG24226 | 24226 | 10M100K |
| A24L15 | 9100-2247 | 4 | | INDUCTOR RF-CH-MLD 100NH 10% .105DX.26LG24226 | 24226 | 10M100K |
| A24Q1 | 1853-0020 | 4 | 1 | TRANSISTOR PNP SI PD=300MW FT=150MHZ | 04713 | |
| A24Q2 | 1854-0345 | 8 | 9 | TRANSISTOR NPN 2N5179 SI TO-72 PD=200MW | 04713 | |
| A24Q3 | 1854-0345 | 8 | | TRANSISTOR NPN 2N5179 SI TO-72 PD=200MW | 04713 | |
| A24Q4 | 1854-0345 | 8 | | TRANSISTOR NPN 2N5179 SI TO-72 PD=200MW | 04713 | |
| A24Q5 | 1854-0345 | 8 | | TRANSISTOR NPN 2N5179 SI TO-72 PD=200MW | 04713 | |
| A24Q6 | 1854-0345 | 8 | | TRANSISTOR NPN 2N5179 SI TO-72 PD=200MW | 04713 | |
| A24Q7 | 1854-0345 | 8 | | TRANSISTOR NPN 2N5179 SI TO-72 PD=200MW | 04713 | |
| A24Q8 | 1854-0345 | 8 | | TRANSISTOR NPN 2N5179 SI TO-72 PD=200MW | 04713 | |
| A24Q9 | 1854-0345 | 8 | | TRANSISTOR NPN 2N5179 SI TO-72 PD=200MW | 04713 | |
| A24Q10 | 1854-0345 | 8 | | TRANSISTOR NPN 2N5179 SI TO-72 PD=200MW | 04713 | |
| A24R1 | 0683-2745 | 2 | 1 | RESISTOR 270K 5% .25W CF TC=0-800 | 77902 | R-25J |
| A24R2 | 0683-5625 | 3 | 2 | RESISTOR 5.6K 5% .25W CF TC=0-400 | 77902 | R-25J |
| A24R3 | 0683-5625 | 3 | | RESISTOR 5.6K 5% .25W CF TC=0-400 | 77902 | R-25J |
| A24R4 | 0683-4705 | 8 | 10 | RESISTOR 47 5% .25W CF TC=0-400 | 77902 | R-25J |
| A24R5 | 0683-5615 | 1 | 1 | RESISTOR 560 5% .25W CF TC=0-400 | 77902 | R-25J |
| A24R7 | 0683-2725 | 8 | 3 | RESISTOR 2.7K 5% .25W CF TC=0-400 | 77902 | R-25J |
| A24R8 | 0683-3325 | 6 | 3 | RESISTOR 3.3K 5% .25W CF TC=0-400 | 77902 | R-25J |
| A24R9 | 0683-3925 | 2 | 2 | RESISTOR 3.9K 5% .25W CF TC=0-400 | 77902 | R-25J |
| A24R10 | 0683-4705 | 8 | | RESISTOR 47 5% .25W CF TC=0-400 | 77902 | R-25J |
| A24R11 | 0683-4705 | 8 | | RESISTOR 47 5% .25W CF TC=0-400 | 77902 | R-25J |
| A24R12 | 0683-3315 | 4 | 2 | RESISTOR 330 5% .25W CF TC=0-400 | 77902 | R-25J |
| A24R13 | 0683-2205 | 9 | 5 | RESISTOR 22 5% .25W CF TC=0-400 | 77902 | R-25J |
| A24R14 | 0683-2205 | 9 | | RESISTOR 22 5% .25W CF TC=0-400 | 77902 | R-25J |
| A24R16 | 0683-2025 | 1 | 3 | RESISTOR 2K 5% .25W CF TC=0-400 | 77902 | R-25J |
| A24R17 | 0683-4705 | 8 | | RESISTOR 47 5% .25W CF TC=0-400 | 77902 | R-25J |
| A24R18 | 0683-2725 | 8 | | RESISTOR 2.7K 5% .25W CF TC=0-400 | 77902 | R-25J |
| A24R19 | 0683-4705 | 8 | | RESISTOR 47 5% .25W CF TC=0-400 | 77902 | R-25J |
| A24R20 | 0683-3325 | 6 | | RESISTOR 3.3K 5% .25W CF TC=0-400 | 77902 | R-25J |
| A24R21 | 0683-4705 | 8 | | RESISTOR 47 5% .25W CF TC=0-400 | 77902 | R-25J |
| A24R22 | 0683-3925 | 2 | | RESISTOR 3.9K 5% .25W CF TC=0-400 | 77902 | R-25J |
| A24R23 | 0683-2215 | 1 | 1 | RESISTOR 220 5% .25W CF TC=0-400 | 77902 | R-25J |
| A24R24 | 0683-1015 | 7 | 1 | RESISTOR 100 5% .25W CF TC=0-400 | 77902 | R-25J |
| A24R25 | 0683-2205 | 9 | | RESISTOR 22 5% .25W CF TC=0-400 | 77902 | R-25J |
| A24R26 | 0683-2205 | 9 | | RESISTOR 22 5% .25W CF TC=0-400 | 77902 | R-25J |
| A24R29 | 0683-2025 | 1 | | RESISTOR 2K 5% .25W CF TC=0-400 | 77902 | R-25J |
| A24R30 | 0683-4705 | 8 | | RESISTOR 47 5% .25W CF TC=0-400 | 77902 | R-25J |
| A24R31 | 0683-2725 | 8 | | RESISTOR 2.7K 5% .25W CF TC=0-400 | 77902 | R-25J |
| A24R32 | 0683-4705 | 8 | | RESISTOR 47 5% .25W CF TC=0-400 | 77902 | R-25J |
| A24R33 | 0683-3325 | 6 | | RESISTOR 3.3K 5% .25W CF TC=0-400 | 77902 | R-25J |
| A24R34 | 0683-3315 | 4 | | RESISTOR 330 5% .25W CF TC=0-400 | 77902 | R-25J |
| A24R35 | 0683-3305 | 2 | 1 | RESISTOR 33 5% .25W CF TC=0-400 | 77902 | R-25J |
| A24R36 | 0683-2205 | 9 | | RESISTOR 22 5% .25W CF TC=0-400 | 77902 | R-25J |
| A24R38 | 0683-4705 | 8 | | RESISTOR 47 5% .25W CF TC=0-400 | 77902 | R-25J |
| A24R39 | 0683-1025 | 9 | 1 | RESISTOR 1K 5% .25W CF TC=0-400 | 77902 | R-25J |

See introduction to this section for ordering information
* Indicates one of several possible values installed

# Table 9-3. Replaceable Parts

| Reference Designation | HP Part Number | C D | Qty. | Description | Mfr. Code | Mfr. Part Number |
|---|---|---|---|---|---|---|
| A24R40 | 0683-7505 | 2 | 1 | RESISTOR 75 5% .25W CF TC=0-400 | 77902 | R-25J |
| A24R41 | 0683-2025 | 1 | | RESISTOR 2K 5% .25W CF TC=0-400 | 77902 | R-25J |
| A24R42 | 0683-4705 | 8 | | RESISTOR 47 5% .25W CF TC=0-400 | 77902 | R-25J |
| | 7121-4611 | 2 | 1 | LABEL-INFORMATION .15-IN-WD .6-IN-LG | 28480 | L01003 |
| **A25** | **03585-66525** | **0** | **1** | **SUM LOOP MIXER PC BD ASSEMBLY** | **28480** | **03585-66525** |
| A25C1 | 0150-0050 | 9 | 16 | CAPACITOR-FXD 1000PF +80-20% 1KVDC CER | 59660 | 838-557-X5R-102Z |
| A25C2 | 0150-0050 | 9 | | CAPACITOR-FXD 1000PF +80-20% 1KVDC CER | 59660 | 838-557-X5R-102Z |
| A25C3 | 0150-0050 | 9 | | CAPACITOR-FXD 1000PF +80-20% 1KVDC CER | 59660 | 838-557-X5R-102Z |
| A25C4 | 0150-0050 | 9 | | CAPACITOR-FXD 1000PF +80-20% 1KVDC CER | 59660 | 838-557-X5R-102Z |
| A25C5 | 0150-0050 | 9 | | CAPACITOR-FXD 1000PF +80-20% 1KVDC CER | 59660 | 838-557-X5R-102Z |
| A25C6 | 0150-0050 | 9 | | CAPACITOR-FXD 1000PF +80-20% 1KVDC CER | 59660 | 838-557-X5R-102Z |
| A25C7 | 0150-0050 | 9 | | CAPACITOR-FXD 1000PF +80-20% 1KVDC CER | 59660 | 838-557-X5R-102Z |
| A25C8 | 0150-0050 | 9 | | CAPACITOR-FXD 1000PF +80-20% 1KVDC CER | 59660 | 838-557-X5R-102Z |
| A25C9 | 0150-0050 | 9 | | CAPACITOR-FXD 1000PF +80-20% 1KVDC CER | 59660 | 838-557-X5R-102Z |
| A25C10 | 0150-0050 | 9 | | CAPACITOR-FXD 1000PF +80-20% 1KVDC CER | 59660 | 838-557-X5R-102Z |
| A25C11 | 0150-0050 | 9 | | CAPACITOR-FXD 1000PF +80-20% 1KVDC CER | 59660 | 838-557-X5R-102Z |
| A25C12 | 0150-0050 | 9 | | CAPACITOR-FXD 1000PF +80-20% 1KVDC CER | 59660 | 838-557-X5R-102Z |
| A25C13 | 0150-0050 | 9 | | CAPACITOR-FXD 1000PF +80-20% 1KVDC CER | 59660 | 838-557-X5R-102Z |
| A25C14 | 0150-0050 | 9 | | CAPACITOR-FXD 1000PF +80-20% 1KVDC CER | 59660 | 838-557-X5R-102Z |
| A25C15 | 0160-0363 | 8 | 1 | CAPACITOR-FXD 620PF +-5% 300VDC MICA | 00853 | |
| A25C16 | 0160-0938 | 3 | 1 | CAPACITOR-FXD 1000PF +-5% 100VDC MICA | 00853 | D15C1E102J |
| A25C17 | 0160-2035 | 5 | 1 | CAPACITOR-FXD 750PF +-5% 300VDC MICA | 00853 | |
| A25C18 | 0160-6509 | 6 | 6 | C-F .1UF --% 100V CERMLr | 28480 | RPE122-977Z5U104Z100V |
| A25C19 | 0160-6509 | 6 | | C-F .1UF --% 100V CERMLr | 28480 | RPE122-977Z5U104Z100V |
| A25C20 | 0160-6509 | 6 | | C-F .1UF --% 100V CERMLr | 28480 | RPE122-977Z5U104Z100V |
| A25C21 | 0160-6509 | 6 | | C-F .1UF --% 100V CERMLr | 28480 | RPE122-977Z5U104Z100V |
| A25C23 | 0160-6509 | 6 | | C-F .1UF --% 100V CERMLr | 28480 | RPE122-977Z5U104Z100V |
| A25C24 | 0180-1746 | 5 | 4 | CAPACITOR-FXD 15UF+-10% 20VDC TA | 13606 | 150D156X9020B2-DYS |
| A25C25 | 0160-6509 | 6 | | C-F .1UF --% 100V CERMLr | 28480 | RPE122-977Z5U104Z100V |
| A25C26 | 0180-1746 | 5 | | CAPACITOR-FXD 15UF+-10% 20VDC TA | 13606 | 150D156X9020B2-DYS |
| A25C30 | 0150-0050 | 9 | | CAPACITOR-FXD 1000PF +80-20% 1KVDC CER | 59660 | 838-557-X5R-102Z |
| A25C31 | 0150-0050 | 9 | | CAPACITOR-FXD 1000PF +80-20% 1KVDC CER | 59660 | 838-557-X5R-102Z |
| A25C32 | 0180-1746 | 5 | | CAPACITOR-FXD 15UF+-10% 20VDC TA | 13606 | 150D156X9020B2-DYS |
| A25C33 | 0180-1746 | 5 | | CAPACITOR-FXD 15UF+-10% 20VDC TA | 13606 | 150D156X9020B2-DYS |
| A25H1 | 03585-05225 | 9 | 1 | SHTF CVR-A25 ALSK | 28480 | 03585-05225 |
| A25H1 | 0570-1030 | 7 | 1 | STD-PRS 6-32 .31LG STLZ | 46384 | FH-632-5-ZI |
| A25H5 | 0370-2583 | 3 | 1 | MOLD KNOB-THRD F 6-32 | 04533P01 | 3001-SD |
| A25H6 | 2190-0124 | 4 | 3 | WASHER-LK INTL T NO. 10 .195-IN-ID | 98291 | 3002-26 |
| A25H7 | 2190-0124 | 4 | | WASHER-LK INTL T NO. 10 .195-IN-ID | 98291 | 3002-26 |
| A25H8 | 2190-0124 | 4 | | WASHER-LK INTL T NO. 10 .195-IN-ID | 98291 | 3002-26 |
| A25H9 | 2200-0103 | 2 | 3 | SCREW-MACH 4-40 .25-IN-LG PAN-HD-POZI | 83486 | |
| A25H10 | 2200-0103 | 2 | | SCREW-MACH 4-40 .25-IN-LG PAN-HD-POZI | 83486 | |
| A25H11 | 2200-0103 | 2 | | SCREW-MACH 4-40 .25-IN-LG PAN-HD-POZI | 83486 | |
| A25H12 | 2950-0078 | 9 | 3 | NUT-HEX-DBL-CHAM 10-32-THD .067-IN-THK | 98291 | 33002-18-00-0-156 |
| A25H13 | 2950-0078 | 9 | | NUT-HEX-DBL-CHAM 10-32-THD .067-IN-THK | 98291 | 33002-18-00-0-156 |
| A25H14 | 2950-0078 | 9 | | NUT-HEX-DBL-CHAM 10-32-THD .067-IN-THK | 98291 | 33002-18-00-0-156 |
| A25H15 | 5001-0176 | 0 | 1 | STMP GRD STRAP | 28480 | 5001-0176 |
| A25J1 | 1250-2142 | 7 | 3 | CON-SMB | 74970 | 131-3701-341 |
| A25J2 | 1250-2142 | 7 | | CON-SMB | 74970 | 131-3701-341 |
| A25J3 | 1250-2142 | 7 | | CON-SMB | 74970 | 131-3701-341 |
| A25L1 | 9100-2255 | 4 | 2 | INDUCTOR RF-CH-MLD 470NH 10% .105DX.26LG24226 | 24226 | 10M470K |
| A25L2 | 9100-1620 | 5 | 2 | INDUCTOR RF-CH-MLD 15UH 10% .166DX.385LG99800 | 99800 | 1537-40 |
| A25L3 | 9100-1620 | 5 | | INDUCTOR RF-CH-MLD 15UH 10% .166DX.385LG99800 | 99800 | 1537-40 |
| A25L4 | 9100-2255 | 4 | | INDUCTOR RF-CH-MLD 470NH 10% .105DX.26LG24226 | 24226 | 10M470K |
| A25L5 | 9100-2260 | 1 | 2 | INDUCTOR RF-CH-MLD 1.8UH 10% .105DX.26LG24226 | 24226 | 10M181K |
| A25L6 | 9100-2260 | 1 | | INDUCTOR RF-CH-MLD 1.8UH 10% .105DX.26LG24226 | 24226 | 10M181K |
| A25L9 | 9140-0748 | 0 | 2 | INDUCTOR 250UH 25% .25DX.5LG Q=3 | 24226 | CA-253-5 |
| A25L10 | 9140-0748 | 0 | | INDUCTOR 250UH 25% .25DX.5LG Q=3 | 24226 | CA-253-5 |
| A25Q1 | 1854-0345 | 8 | 6 | TRANSISTOR NPN 2N5179 SI TO-72 PD=200MW | 04713 | |
| A25Q2 | 1854-0345 | 8 | | TRANSISTOR NPN 2N5179 SI TO-72 PD=200MW | 04713 | |
| A25Q3 | 1854-0345 | 8 | | TRANSISTOR NPN 2N5179 SI TO-72 PD=200MW | 04713 | |
| A25Q4 | 1854-0345 | 8 | | TRANSISTOR NPN 2N5179 SI TO-72 PD=200MW | 04713 | |
| A25Q5 | 1854-0345 | 8 | | TRANSISTOR NPN 2N5179 SI TO-72 PD=200MW | 04713 | |
| A25Q6 | 1854-0345 | 8 | | TRANSISTOR NPN 2N5179 SI TO-72 PD=200MW | 04713 | |
| A25Q7 | 1854-0215 | 1 | 1 | TRANSISTOR NPN SI PD=350MW FT=300MHZ | 04713 | |

See introduction to this section for ordering information
* Indicates one of several possible values installed

# Table 9-3. Replaceable Parts

| Reference Designation | HP Part Number | C D | Qty. | Description | Mfr. Code | Mfr. Part Number |
|---|---|---|---|---|---|---|
| A25Q8 | 1854-0351 | 6 | 1 | TRANSISTOR NPN SI TO-18 PD=360MW | 04713 | |
| A25R1 | 0683-4705 | 8 | 10 | RESISTOR 47 5% .25W CF TC=0-400 | 77902 | R-25J |
| A25R2 | 0683-6815 | 5 | 2 | RESISTOR 680 5% .25W CF TC=0-400 | 77902 | R-25J |
| A25R3 | 0683-1005 | 5 | 2 | RESISTOR 10 5% .25W CF TC=0-400 | 77902 | R-25J |
| A25R4 | 0683-6825 | 7 | 4 | RESISTOR 6.8K 5% .25W CF TC=0-400 | 77902 | R-25J |
| A25R5 | 0683-6825 | 7 | | RESISTOR 6.8K 5% .25W CF TC=0-400 | 77902 | R-25J |
| A25R6 | 0683-2215 | 1 | 3 | RESISTOR 220 5% .25W CF TC=0-400 | 77902 | R-25J |
| A25R7 | 0683-2025 | 1 | 4 | RESISTOR 2K 5% .25W CF TC=0-400 | 77902 | R-25J |
| A25R8 | 0683-4705 | 8 | | RESISTOR 47 5% .25W CF TC=0-400 | 77902 | R-25J |
| A25R9 | 0683-2725 | 8 | 2 | RESISTOR 2.7K 5% .25W CF TC=0-400 | 77902 | R-25J |
| A25R10 | 0683-4705 | 8 | | RESISTOR 47 5% .25W CF TC=0-400 | 77902 | R-25J |
| A25R11 | 0683-3325 | 6 | 2 | RESISTOR 3.3K 5% .25W CF TC=0-400 | 77902 | R-25J |
| A25R12 | 0683-4705 | 8 | | RESISTOR 47 5% .25W CF TC=0-400 | 77902 | R-25J |
| A25R13 | 0683-3315 | 4 | 2 | RESISTOR 330 5% .25W CF TC=0-400 | 77902 | R-25J |
| A25R14 | 0683-2205 | 9 | 3 | RESISTOR 22 5% .25W CF TC=0-400 | 77902 | R-25J |
| A25R15 | 0683-4705 | 8 | | RESISTOR 47 5% .25W CF TC=0-400 | 77902 | R-25J |
| A25R16 | 0683-4705 | 8 | | RESISTOR 47 5% .25W CF TC=0-400 | 77902 | R-25J |
| A25R17 | 0683-6815 | 5 | | RESISTOR 680 5% .25W CF TC=0-400 | 77902 | R-25J |
| A25R18 | 0683-1005 | 5 | | RESISTOR 10 5% .25W CF TC=0-400 | 77902 | R-25J |
| A25R19 | 0683-2215 | 1 | | RESISTOR 220 5% .25W CF TC=0-400 | 77902 | R-25J |
| A25R20 | 0683-2025 | 1 | | RESISTOR 2K 5% .25W CF TC=0-400 | 77902 | R-25J |
| A25R21 | 0683-4705 | 8 | | RESISTOR 47 5% .25W CF TC=0-400 | 77902 | R-25J |
| A25R22 | 0683-2725 | 8 | | RESISTOR 2.7K 5% .25W CF TC=0-400 | 77902 | R-25J |
| A25R23 | 0683-4705 | 8 | | RESISTOR 47 5% .25W CF TC=0-400 | 77902 | R-25J |
| A25R24 | 0683-3325 | 6 | | RESISTOR 3.3K 5% .25W CF TC=0-400 | 77902 | R-25J |
| A25R25 | 0683-2205 | 9 | | RESISTOR 22 5% .25W CF TC=0-400 | 77902 | R-25J |
| A25R26 | 0683-3315 | 4 | | RESISTOR 330 5% .25W CF TC=0-400 | 77902 | R-25J |
| A25R27 | 0683-2205 | 9 | | RESISTOR 22 5% .25W CF TC=0-400 | 77902 | R-25J |
| A25R28 | 0683-1015 | 7 | 2 | RESISTOR 100 5% .25W CF TC=0-400 | 77902 | R-25J |
| A25R29 | 0683-6825 | 7 | | RESISTOR 6.8K 5% .25W CF TC=0-400 | 77902 | R-25J |
| A25R30 | 0683-6825 | 7 | | RESISTOR 6.8K 5% .25W CF TC=0-400 | 77902 | R-25J |
| A25R31 | 0683-1035 | 1 | 1 | RESISTOR 10K 5% .25W CF TC=0-400 | 77902 | R-25J |
| A25R32 | 0683-4705 | 8 | | RESISTOR 47 5% .25W CF TC=0-400 | 77902 | R-25J |
| A25R33 | 0683-2215 | 1 | | RESISTOR 220 5% .25W CF TC=0-400 | 77902 | R-25J |
| A25R34 | 0683-3925 | 2 | 2 | RESISTOR 3.9K 5% .25W CF TC=0-400 | 77902 | R-25J |
| A25R35 | 0683-2025 | 1 | | RESISTOR 2K 5% .25W CF TC=0-400 | 77902 | R-25J |
| A25R36 | 0683-4705 | 8 | | RESISTOR 47 5% .25W CF TC=0-400 | 77902 | R-25J |
| A25R37 | 0683-2225 | 3 | 1 | RESISTOR 2.2K 5% .25W CF TC=0-400 | 77902 | R-25J |
| A25R38 | 0683-1015 | 7 | | RESISTOR 100 5% .25W CF TC=0-400 | 77902 | R-25J |
| A25R50 | 0683-2025 | 1 | | RESISTOR 2K 5% .25W CF TC=0-400 | 77902 | R-25J |
| A25R51 | 0683-3925 | 2 | | RESISTOR 3.9K 5% .25W CF TC=0-400 | 77902 | R-25J |
| A25TP1 | 1251-0600 | 0 | 3 | CONNECTOR-SGL CONT PIN 1.14-MM-BSC-SZ SQ27264 | 27264 | 16-06-0034 |
| A25TP2 | 1251-0600 | 0 | | CONNECTOR-SGL CONT PIN 1.14-MM-BSC-SZ SQ27264 | 27264 | 16-06-0034 |
| A25TP3 | 1251-0600 | 0 | | CONNECTOR-SGL CONT PIN 1.14-MM-BSC-SZ SQ27264 | 27264 | 16-06-0034 |
| A25U1 | 0955-0087 | 8 | 1 | MIX MWAV SRA-1-84 500MHZ 8 | 16239 | SRA-1-84 |
| | 7121-4611 | 2 | 1 | LABEL-INFORMATION .15-IN-WD .6-IN-LG | 28480 | L01003 |
| **A26** | **03585-66526** | **1** | **1** | **STEP PHASE DETECTOR PC BD ASSEMBLY** | **28480** | **03585-66526** |
| A26C1 | 0150-0050 | 9 | 13 | CAPACITOR-FXD 1000PF +80-20% 1KVDC CER | 59660 | 838-557-X5R-102Z |
| A26C2 | 0150-0050 | 9 | | CAPACITOR-FXD 1000PF +80-20% 1KVDC CER | 59660 | 838-557-X5R-102Z |
| A26C3 | 0150-0050 | 9 | | CAPACITOR-FXD 1000PF +80-20% 1KVDC CER | 59660 | 838-557-X5R-102Z |
| A26C5 | 0160-6511 | 0 | 1 | C-F 15PF 5% 200V CERMLr | 28480 | RPE121-978C0G150J200V |
| A26C6 | 0150-0050 | 9 | | CAPACITOR-FXD 1000PF +80-20% 1KVDC CER | 59660 | 838-557-X5R-102Z |
| A26C7 | 0150-0050 | 9 | | CAPACITOR-FXD 1000PF +80-20% 1KVDC CER | 59660 | 838-557-X5R-102Z |
| A26C8 | 0150-0050 | 9 | | CAPACITOR-FXD 1000PF +80-20% 1KVDC CER | 59660 | 838-557-X5R-102Z |
| A26C9 | 0150-0050 | 9 | | CAPACITOR-FXD 1000PF +80-20% 1KVDC CER | 59660 | 838-557-X5R-102Z |
| A26C10 | 0150-0050 | 9 | | CAPACITOR-FXD 1000PF +80-20% 1KVDC CER | 59660 | 838-557-X5R-102Z |
| A26C11 | 0150-0050 | 9 | | CAPACITOR-FXD 1000PF +80-20% 1KVDC CER | 59660 | 838-557-X5R-102Z |
| A26C12 | 0160-6527 | 8 | 22 | C-F .01UF --% 100V CERDCr | 28480 | DD109N90GY5U103Z100V |
| A26C13 | 0160-6527 | 8 | | C-F .01UF --% 100V CERDCr | 28480 | DD109N90GY5U103Z100V |
| A26C14 | 0160-2202 | 8 | 1 | CAPACITOR-FXD 75PF +-5% 300VDC MICA | 00853 | |
| A26C15 | 0160-2205 | 1 | 1 | CAPACITOR-FXD 120PF +-5% 300VDC MICA | 00853 | |
| A26C16 | 0160-2203 | 9 | 1 | CAPACITOR-FXD 91PF +-5% 300VDC MICA 0+7000853 | 00853 | |

See introduction to this section for ordering information
* Indicates one of several possible values installed

# Table 9-3. Replaceable Parts

| Reference Designation | HP Part Number | C D | Qty. | Description | Mfr. Code | Mfr. Part Number |
|---|---|---|---|---|---|---|
| A26C18 | 0160-6527 | 8 | | C-F .01UF --% 100V CERDCr | 28480 | DD109N90GY5U103Z100V |
| A26C20 | 0160-6527 | 8 | | C-F .01UF --% 100V CERDCr | 28480 | DD109N90GY5U103Z100V |
| A26C21 | 0160-6527 | 8 | | C-F .01UF --% 100V CERDCr | 28480 | DD109N90GY5U103Z100V |
| A26C22 | 0160-6527 | 8 | | C-F .01UF --% 100V CERDCr | 28480 | DD109N90GY5U103Z100V |
| A26C23 | 0160-6527 | 8 | | C-F .01UF --% 100V CERDCr | 28480 | DD109N90GY5U103Z100V |
| A26C24 | 0160-6527 | 8 | | C-F .01UF --% 100V CERDCr | 28480 | DD109N90GY5U103Z100V |
| A26C25 | 0160-6527 | 8 | | C-F .01UF --% 100V CERDCr | 28480 | DD109N90GY5U103Z100V |
| A26C26 | 0160-6527 | 8 | | C-F .01UF --% 100V CERDCr | 28480 | DD109N90GY5U103Z100V |
| A26C27 | 0160-6527 | 8 | | C-F .01UF --% 100V CERDCr | 28480 | DD109N90GY5U103Z100V |
| A26C29 | 0160-6527 | 8 | | C-F .01UF --% 100V CERDCr | 28480 | DD109N90GY5U103Z100V |
| A26C30 | 0160-6509 | 6 | 17 | C-F .1UF --% 100V CERMLr | 28480 | RPE122-977Z5U104Z100V |
| A26C32 | 0160-6509 | 6 | | C-F .1UF --% 100V CERMLr | 28480 | RPE122-977Z5U104Z100V |
| A26C33 | 0160-6509 | 6 | | C-F .1UF --% 100V CERMLr | 28480 | RPE122-977Z5U104Z100V |
| A26C34 | 0160-6509 | 6 | | C-F .1UF --% 100V CERMLr | 28480 | RPE122-977Z5U104Z100V |
| A26C36 | 0160-0174 | 9 | 1 | CAPACITOR-FXD .47UF +80-20% 50VDC CER | 04222 | SR835E474ZAA |
| A26C38 | 0160-6509 | 6 | | C-F .1UF --% 100V CERMLr | 28480 | RPE122-977Z5U104Z100V |
| A26C43 | 0180-1746 | 5 | 3 | CAPACITOR-FXD 15UF+-10% 20VDC TA | 13606 | 150D156X9020B2-DYS |
| A26C44 | 0160-6509 | 6 | | C-F .1UF --% 100V CERMLr | 28480 | RPE122-977Z5U104Z100V |
| A26C45 | 0180-1746 | 5 | | CAPACITOR-FXD 15UF+-10% 20VDC TA | 13606 | 150D156X9020B2-DYS |
| A26C46 | 0160-6509 | 6 | | C-F .1UF --% 100V CERMLr | 28480 | RPE122-977Z5U104Z100V |
| A26C47 | 0180-1746 | 5 | | CAPACITOR-FXD 15UF+-10% 20VDC TA | 13606 | 150D156X9020B2-DYS |
| A26C48 | 0160-6509 | 6 | | C-F .1UF --% 100V CERMLr | 28480 | RPE122-977Z5U104Z100V |
| A26C50 | 0160-6527 | 8 | | C-F .01UF --% 100V CERDCr | 28480 | DD109N90GY5U103Z100V |
| A26C51 | 0160-6527 | 8 | | C-F .01UF --% 100V CERDCr | 28480 | DD109N90GY5U103Z100V |
| A26C52 | 0160-6527 | 8 | | C-F .01UF --% 100V CERDCr | 28480 | DD109N90GY5U103Z100V |
| A26C53 | 0160-6527 | 8 | | C-F .01UF --% 100V CERDCr | 28480 | DD109N90GY5U103Z100V |
| A26C54 | 0160-6527 | 8 | | C-F .01UF --% 100V CERDCr | 28480 | DD109N90GY5U103Z100V |
| A26C55 | 0160-6527 | 8 | | C-F .01UF --% 100V CERDCr | 28480 | DD109N90GY5U103Z100V |
| A26C56 | 0160-6527 | 8 | | C-F .01UF --% 100V CERDCr | 28480 | DD109N90GY5U103Z100V |
| A26C57 | 0160-6527 | 8 | | C-F .01UF --% 100V CERDCr | 28480 | DD109N90GY5U103Z100V |
| A26C58 | 0150-0050 | 9 | | CAPACITOR-FXD 1000PF +80-20% 1KVDC CER | 59660 | 838-557-X5R-102Z |
| A26C59 | 0160-6509 | 6 | | C-F .1UF --% 100V CERMLr | 28480 | RPE122-977Z5U104Z100V |
| A26C60 | 0150-0050 | 9 | | CAPACITOR-FXD 1000PF +80-20% 1KVDC CER | 59660 | 838-557-X5R-102Z |
| A26C61 | 0160-6509 | 6 | | C-F .1UF --% 100V CERMLr | 28480 | RPE122-977Z5U104Z100V |
| A26C62 | 0150-0050 | 9 | | CAPACITOR-FXD 1000PF +80-20% 1KVDC CER | 59660 | 838-557-X5R-102Z |
| A26C63 | 0150-0050 | 9 | | CAPACITOR-FXD 1000PF +80-20% 1KVDC CER | 59660 | 838-557-X5R-102Z |
| A26C63 | 0160-0127 | 2 | 2 | CAPACITOR-FXD 1UF +-20% 25VDC CER | 04222 | SR835E105MAA |
| A26C64 | 0160-0127 | 2 | | CAPACITOR-FXD 1UF +-20% 25VDC CER | 04222 | SR835E105MAA |
| A26C100 | 0170-0060 | 3 | 1 | CAPACITOR-FXD .047UF +-10% 400VDC POLYE | 15766 | 663UW |
| A26C102 | 0160-2200 | 6 | 1 | CAPACITOR-FXD 43PF +-5% 300VDC MICA | 00853 | |
| A26C103 | 0160-6509 | 6 | | C-F .1UF --% 100V CERMLr | 28480 | RPE122-977Z5U104Z100V |
| A26C104 | 0160-6509 | 6 | | C-F .1UF --% 100V CERMLr | 28480 | RPE122-977Z5U104Z100V |
| A26C105 | 0140-0208 | 8 | 1 | CAPACITOR-FXD 680PF +-5% 300VDC MICA | 09023 | |
| A26C106 | 0160-6509 | 6 | | C-F .1UF --% 100V CERMLr | 28480 | RPE122-977Z5U104Z100V |
| A26C107 | 0160-6509 | 6 | | C-F .1UF --% 100V CERMLr | 28480 | RPE122-977Z5U104Z100V |
| A26C108 | 0160-6509 | 6 | | C-F .1UF --% 100V CERMLr | 28480 | RPE122-977Z5U104Z100V |
| A26C109 | 0160-6509 | 6 | | C-F .1UF --% 100V CERMLr | 28480 | RPE122-977Z5U104Z100V |
| A26C110 | 0140-0210 | 2 | 1 | CAPACITOR-FXD 270PF +-5% 300VDC MICA | 00853 | |
| A26C111 | 0180-0197 | 8 | 2 | CAPACITOR-FXD 2.2UF+-10% 20VDC TA | 13606 | 150D225X9020A2-DYS |
| A26C112 | 0180-0197 | 8 | | CAPACITOR-FXD 2.2UF+-10% 20VDC TA | 13606 | 150D225X9020A2-DYS |
| A26C113 | 0140-0197 | 4 | 1 | CAPACITOR-FXD 180PF +-5% 300VDC MICA | 09023 | |
| A26C114 | 0140-0196 | 3 | 1 | CAPACITOR-FXD 150PF +-5% 300VDC MICA | 09023 | |
| A26C115 | 0160-6509 | 6 | | C-F .1UF --% 100V CERMLr | 28480 | RPE122-977Z5U104Z100V |
| A26C116 | 0160-2199 | 2 | 1 | CAPACITOR-FXD 30PF +-5% 300VDC MICA | 00853 | |
| A26C120 | 0160-6527 | 8 | | C-F .01UF --% 100V CERDCr | 28480 | DD109N90GY5U103Z100V |
| A26C121 | 0160-6527 | 8 | | C-F .01UF --% 100V CERDCr | 28480 | DD109N90GY5U103Z100V |
| A26CR3 | 1901-0347 | 1 | 2 | DIODE-SCHOTTKY SM SIG | 28480 | 1901-0347 |
| A26CR4 | 1901-0347 | 1 | | DIODE-SCHOTTKY SM SIG | 28480 | 1901-0347 |
| A26CR5 | 1901-0040 | 1 | 5 | DIODE-SWITCHING 30V 50MA 2NS DO-35 | 9N171 | |
| A26CR8 | 1901-0040 | 1 | | DIODE-SWITCHING 30V 50MA 2NS DO-35 | 9N171 | |
| A26CR100 | 1901-0040 | 1 | | DIODE-SWITCHING 30V 50MA 2NS DO-35 | 9N171 | |
| A26CR101 | 1901-0040 | 1 | | DIODE-SWITCHING 30V 50MA 2NS DO-35 | 9N171 | |
| A26CR102 | 1901-0040 | 1 | | DIODE-SWITCHING 30V 50MA 2NS DO-35 | 9N171 | |
| A26H1 | 03585-05226 | 0 | 1 | SHTF CVR-A26 ALSK | 28480 | 03585-05226 |
| A26H2 | 0361-0230 | 4 | 1 | RVT-STB OVHD .123D .19LG BRSTN | 12014 | R-3682 |

See introduction to this section for ordering information
* Indicates one of several possible values installed

## Table 9-3. Replaceable Parts

| Reference Designation | HP Part Number | C D | Qty. | Description | Mfr. Code | Mfr. Part Number |
|---|---|---|---|---|---|---|
| A26H3 | 0370-2583 | 3 | 1 | MOLD KNOB-THRD F 6-32 | 04533P01 | 3001-SD |
| A26H4 | 1200-0185 | 9 | 1 | INSULATOR-XSTR NYLON | 13103 | 7717-86N RED |
| A26H20 | 1400-0971 | 5 | 1 | BRACKET-RTANG .452-LG .312-WD STL NI-PL | 03669P01 | |
| A26H21 | 2190-0124 | 4 | 4 | WASHER-LK INTL T NO. 10 .195-IN-ID | 98291 | 3002-26 |
| A26H22 | 2190-0124 | 4 | | WASHER-LK INTL T NO. 10 .195-IN-ID | 98291 | 3002-26 |
| A26H23 | 2190-0124 | 4 | | WASHER-LK INTL T NO. 10 .195-IN-ID | 98291 | 3002-26 |
| A26H24 | 2190-0124 | 4 | | WASHER-LK INTL T NO. 10 .195-IN-ID | 98291 | 3002-26 |
| A26H25 | 2200-0101 | 0 | 1 | SCREW-MACH 4-40 .188-IN-LG PAN-HD-POZI | 83486 | |
| A26H26 | 2950-0078 | 9 | 4 | NUT-HEX-DBL-CHAM 10-32-THD .067-IN-THK | 98291 | 33002-18-00-0-156 |
| A26H27 | 2950-0078 | 9 | | NUT-HEX-DBL-CHAM 10-32-THD .067-IN-THK | 98291 | 33002-18-00-0-156 |
| A26H28 | 2950-0078 | 9 | | NUT-HEX-DBL-CHAM 10-32-THD .067-IN-THK | 98291 | 33002-18-00-0-156 |
| A26H29 | 2950-0078 | 9 | | NUT-HEX-DBL-CHAM 10-32-THD .067-IN-THK | 98291 | 33002-18-00-0-156 |
| A26H30 | 5001-0176 | 0 | 1 | STMP GRD STRAP | 28480 | 5001-0176 |
| A26J1 | 1250-2142 | 7 | 4 | CON-SMB | 74970 | 131-3701-341 |
| A26J2 | 1250-2142 | 7 | | CON-SMB | 74970 | 131-3701-341 |
| A26J3 | 1250-2142 | 7 | | CON-SMB | 74970 | 131-3701-341 |
| A26J4 | 1250-2142 | 7 | | CON-SMB | 74970 | 131-3701-341 |
| A26L1 | 9140-0158 | 6 | 1 | INDUCTOR RF-CH-MLD 1UH 10% .105DX.26LG | 32159 | 1A1002M +-10% |
| A26L2 | 9100-2255 | 4 | 1 | INDUCTOR RF-CH-MLD 470NH 10% .105DX.26LG24226 | 24226 | 10M470K |
| A26L3 | 9100-1620 | 5 | 1 | INDUCTOR RF-CH-MLD 15UH 10% .166DX.385LG99800 | 99800 | 1537-40 |
| A26L4 | 9140-0262 | 3 | 2 | INDUCTOR RF-CH-MLD 200NH 5% .166DX.385LG24226 | 24226 | 15M200J |
| A26L5 | 9140-0262 | 3 | | INDUCTOR RF-CH-MLD 200NH 5% .166DX.385LG24226 | 24226 | 15M200J |
| A26L10 | 9140-0029 | 0 | 2 | INDUCTOR RF-CH-MLD 100UH 10% .25DX.313LG99484 | 99484 | 3100-12-101 |
| A26L11 | 9140-0029 | 0 | | INDUCTOR RF-CH-MLD 100UH 10% .25DX.313LG99484 | 99484 | 3100-12-101 |
| A26L12 | 9140-0748 | 0 | 1 | INDUCTOR 250UH 25% .25DX.5LG Q=3 | 24226 | CA-253-5 |
| A26L100 | 9140-0129 | 1 | 1 | INDUCTOR RF-CH-MLD 220UH 5% .166DX.385LG99800 | 99800 | 1537-92 |
| A26L101 | 9100-1640 | 9 | 1 | INDUCTOR RF-CH-MLD 160UH 5% .166DX.385LG99800 | 99800 | 1537-86 |
| A26Q1 | 1854-0345 | 8 | 4 | TRANSISTOR NPN 2N5179 SI TO-72 PD=200MW | 04713 | |
| A26Q2 | 1854-0345 | 8 | | TRANSISTOR NPN 2N5179 SI TO-72 PD=200MW | 04713 | |
| A26Q3 | 1854-0345 | 8 | | TRANSISTOR NPN 2N5179 SI TO-72 PD=200MW | 04713 | |
| A26Q4 | 1854-0019 | 3 | 2 | TRANSISTOR NPN SI TO-18 PD=360MW | 04713 | |
| A26Q5 | 1853-0405 | 9 | 5 | TRANSISTOR PNP SI PD=300MW FT=850MHZ | 04713 | |
| A26Q6 | 1853-0405 | 9 | | TRANSISTOR PNP SI PD=300MW FT=850MHZ | 04713 | |
| A26Q7 | 1853-0405 | 9 | | TRANSISTOR PNP SI PD=300MW FT=850MHZ | 04713 | |
| A26Q8 | 1853-0405 | 9 | | TRANSISTOR PNP SI PD=300MW FT=850MHZ | 04713 | |
| A26Q9 | 1854-0019 | 3 | | TRANSISTOR NPN SI TO-18 PD=360MW | 04713 | |
| A26Q10 | 1854-0071 | 7 | 2 | TRANSISTOR NPN SI PD=300MW FT=200MHZ | 13606 | |
| A26Q11 | 1853-0086 | 2 | 3 | TRANSISTOR PNP SI PD=310MW FT=40MHZ | 04713 | |
| A26Q12 | 1853-0086 | 2 | | TRANSISTOR PNP SI PD=310MW FT=40MHZ | 04713 | |
| A26Q13 | 1854-0345 | 8 | | TRANSISTOR NPN 2N5179 SI TO-72 PD=200MW | 04713 | |
| A26Q100 | 1855-0308 | 5 | 1 | TRANSISTOR-JFET DUAL N-CHAN D-MODE SI | 17856 | |
| A26Q101 | 1854-0215 | 1 | 4 | TRANSISTOR NPN SI PD=350MW FT=300MHZ | 04713 | |
| A26Q102 | 1853-0036 | 2 | 2 | TRANSISTOR PNP SI PD=310MW FT=250MHZ | 04713 | |
| A26Q103 | 1854-0215 | 1 | | TRANSISTOR NPN SI PD=350MW FT=300MHZ | 04713 | |
| A26Q104 | 1854-0215 | 1 | | TRANSISTOR NPN SI PD=350MW FT=300MHZ | 04713 | |
| A26Q105 | 1853-0036 | 2 | | TRANSISTOR PNP SI PD=310MW FT=250MHZ | 04713 | |
| A26Q106 | 1855-0410 | 0 | 1 | TRANSISTOR J-FET N-CHAN D-MODE TO-18 SI | 27014 | |
| A26Q107 | 1854-0351 | 6 | 1 | TRANSISTOR NPN SI TO-18 PD=360MW | 04713 | |
| A26Q108 | 1853-0405 | 9 | | TRANSISTOR PNP SI PD=300MW FT=850MHZ | 04713 | |
| A26Q109 | 1853-0086 | 2 | | TRANSISTOR PNP SI PD=310MW FT=40MHZ | 04713 | |
| A26Q110 | 1854-0071 | 7 | | TRANSISTOR NPN SI PD=300MW FT=200MHZ | 13606 | |
| A26Q111 | 1853-0012 | 4 | 1 | TRANSISTOR PNP 2N2904A SI TO-39 PD=600MW04713 | 04713 | |
| A26Q112 | 1854-0215 | 1 | | TRANSISTOR NPN SI PD=350MW FT=300MHZ | 04713 | |
| A26R1 | 0683-4705 | 8 | 13 | RESISTOR 47 5% .25W CF TC=0-400 | 77902 | R-25J |
| A26R2 | 0683-6815 | 5 | 3 | RESISTOR 680 5% .25W CF TC=0-400 | 77902 | R-25J |
| A26R3 | 0683-4705 | 8 | | RESISTOR 47 5% .25W CF TC=0-400 | 77902 | R-25J |
| A26R4 | 0683-6825 | 7 | 4 | RESISTOR 6.8K 5% .25W CF TC=0-400 | 77902 | R-25J |
| A26R5 | 0683-6825 | 7 | | RESISTOR 6.8K 5% .25W CF TC=0-400 | 77902 | R-25J |
| A26R6 | 0683-4715 | 0 | 15 | RESISTOR 470 5% .25W CF TC=0-400 | 77902 | R-25J |
| A26R7 | 0683-4705 | 8 | | RESISTOR 47 5% .25W CF TC=0-400 | 77902 | R-25J |
| A26R8 | 0683-6815 | 5 | | RESISTOR 680 5% .25W CF TC=0-400 | 77902 | R-25J |
| A26R9 | 0683-4705 | 8 | | RESISTOR 47 5% .25W CF TC=0-400 | 77902 | R-25J |
| A26R10 | 0683-6825 | 7 | | RESISTOR 6.8K 5% .25W CF TC=0-400 | 77902 | R-25J |
| A26R11 | 0683-6825 | 7 | | RESISTOR 6.8K 5% .25W CF TC=0-400 | 77902 | R-25J |
| A26R12 | 0683-6815 | 5 | | RESISTOR 680 5% .25W CF TC=0-400 | 77902 | R-25J |

See introduction to this section for ordering information
* Indicates one of several possible values installed

## Table 9-3. Replaceable Parts

| Reference Designation | HP Part Number | C D | Qty. | Description | Mfr. Code | Mfr. Part Number |
|---|---|---|---|---|---|---|
| A26R13 | 0683-2725 | 8 | 2 | RESISTOR 2.7K 5% .25W CF TC=0-400 | 77902 | R-25J |
| A26R14 | 0683-4705 | 8 | | RESISTOR 47 5% .25W CF TC=0-400 | 77902 | R-25J |
| A26R15 | 0683-4715 | 0 | | RESISTOR 470 5% .25W CF TC=0-400 | 77902 | R-25J |
| A26R16 | 0683-4715 | 0 | | RESISTOR 470 5% .25W CF TC=0-400 | 77902 | R-25J |
| A26R17 | 0683-2205 | 9 | 6 | RESISTOR 22 5% .25W CF TC=0-400 | 77902 | R-25J |
| A26R18 | 0683-4705 | 8 | | RESISTOR 47 5% .25W CF TC=0-400 | 77902 | R-25J |
| A26R19 | 0683-3325 | 6 | 6 | RESISTOR 3.3K 5% .25W CF TC=0-400 | 77902 | R-25J |
| A26R20 | 0683-1015 | 7 | 4 | RESISTOR 100 5% .25W CF TC=0-400 | 77902 | R-25J |
| A26R21 | 0683-4705 | 8 | | RESISTOR 47 5% .25W CF TC=0-400 | 77902 | R-25J |
| A26R22 | 0683-2205 | 9 | | RESISTOR 22 5% .25W CF TC=0-400 | 77902 | R-25J |
| A26R23 | 0757-0280 | 3 | 3 | RESISTOR 1K 1% .125W F TC=0+-100 | 19701 | SFR25H |
| A26R24 | 0698-3558 | 8 | 3 | RESISTOR 4.02K 1% .125W F TC=0+-100 | 19701 | SFR25H |
| A26R25 | 0683-3305 | 2 | 1 | RESISTOR 33 5% .25W CF TC=0-400 | 77902 | R-25J |
| A26R26 | 0757-0280 | 3 | | RESISTOR 1K 1% .125W F TC=0+-100 | 19701 | SFR25H |
| A26R27 | 0683-2205 | 9 | | RESISTOR 22 5% .25W CF TC=0-400 | 77902 | R-25J |
| A26R28 | 0698-3558 | 8 | | RESISTOR 4.02K 1% .125W F TC=0+-100 | 19701 | SFR25H |
| A26R29 | 0683-1015 | 7 | | RESISTOR 100 5% .25W CF TC=0-400 | 77902 | R-25J |
| A26R30 | 0683-2025 | 1 | 4 | RESISTOR 2K 5% .25W CF TC=0-400 | 77902 | R-25J |
| A26R31 | 0683-1025 | 9 | 20 | RESISTOR 1K 5% .25W CF TC=0-400 | 77902 | R-25J |
| A26R32 | 0683-2025 | 1 | | RESISTOR 2K 5% .25W CF TC=0-400 | 77902 | R-25J |
| A26R33 | 0683-4715 | 0 | | RESISTOR 470 5% .25W CF TC=0-400 | 77902 | R-25J |
| A26R34 | 0683-4715 | 0 | | RESISTOR 470 5% .25W CF TC=0-400 | 77902 | R-25J |
| A26R35 | 0683-1025 | 9 | | RESISTOR 1K 5% .25W CF TC=0-400 | 77902 | R-25J |
| A26R36 | 0683-4715 | 0 | | RESISTOR 470 5% .25W CF TC=0-400 | 77902 | R-25J |
| A26R37 | 0683-1025 | 9 | | RESISTOR 1K 5% .25W CF TC=0-400 | 77902 | R-25J |
| A26R38 | 0683-1025 | 9 | | RESISTOR 1K 5% .25W CF TC=0-400 | 77902 | R-25J |
| A26R39 | 0683-1025 | 9 | | RESISTOR 1K 5% .25W CF TC=0-400 | 77902 | R-25J |
| A26R40 | 0683-1025 | 9 | | RESISTOR 1K 5% .25W CF TC=0-400 | 77902 | R-25J |
| A26R42 | 0683-1025 | 9 | | RESISTOR 1K 5% .25W CF TC=0-400 | 77902 | R-25J |
| A26R43 | 0683-4715 | 0 | | RESISTOR 470 5% .25W CF TC=0-400 | 77902 | R-25J |
| A26R44 | 0683-4715 | 0 | | RESISTOR 470 5% .25W CF TC=0-400 | 77902 | R-25J |
| A26R45 | 0683-4705 | 8 | | RESISTOR 47 5% .25W CF TC=0-400 | 77902 | R-25J |
| A26R46 | 0683-4705 | 8 | | RESISTOR 47 5% .25W CF TC=0-400 | 77902 | R-25J |
| A26R47 | 0683-8215 | 3 | 2 | RESISTOR 820 5% .25W CF TC=0-400 | 77902 | R-25J |
| A26R48 | 0683-2215 | 1 | 4 | RESISTOR 220 5% .25W CF TC=0-400 | 77902 | R-25J |
| A26R49 | 0683-3025 | 3 | 2 | RESISTOR 3K 5% .25W CF TC=0-400 | 77902 | R-25J |
| A26R50 | 0683-1025 | 9 | | RESISTOR 1K 5% .25W CF TC=0-400 | 77902 | R-25J |
| A26R51 | 0683-3025 | 3 | | RESISTOR 3K 5% .25W CF TC=0-400 | 77902 | R-25J |
| A26R52 | 0757-0280 | 3 | | RESISTOR 1K 1% .125W F TC=0+-100 | 19701 | SFR25H |
| A26R53 | 0698-3558 | 8 | | RESISTOR 4.02K 1% .125W F TC=0+-100 | 19701 | SFR25H |
| A26R54 | 0698-4510 | 4 | 1 | RESISTOR 84.5K 1% .125W F TC=0+-100 | 91637 | CMF-55-1, T-1 |
| A26R55 | 0757-0283 | 6 | 2 | RESISTOR 2K 1% .125W F TC=0+-100 | 19701 | SFR25H |
| A26R56 | 0757-0445 | 2 | 1 | RESISTOR 13K 1% .125W F TC=0+-100 | 19701 | SFR25H |
| A26R57 | 0698-3155 | 1 | 1 | RESISTOR 4.64K 1% .125W F TC=0+-100 | 19701 | SFR25H |
| A26R58 | 0683-3325 | 6 | | RESISTOR 3.3K 5% .25W CF TC=0-400 | 77902 | R-25J |
| A26R59 | 0683-1825 | 7 | 1 | RESISTOR 1.8K 5% .25W CF TC=0-400 | 77902 | R-25J |
| A26R61 | 0683-4735 | 4 | 1 | RESISTOR 47K 5% .25W CF TC=0-400 | 77902 | R-25J |
| A26R62 | 0683-1045 | 3 | 2 | RESISTOR 100K 5% .25W CF TC=0-400 | 77902 | R-25J |
| A26R63 | 0683-2235 | 5 | 1 | RESISTOR 22K 5% .25W CF TC=0-400 | 77902 | R-25J |
| A26R64 | 0683-3015 | 1 | 1 | RESISTOR 300 5% .25W CF TC=0-400 | 77902 | R-25J |
| A26R65 | 0683-1235 | 3 | 1 | RESISTOR 12K 5% .25W CF TC=0-400 | 77902 | R-25J |
| A26R66 | 0683-3325 | 6 | | RESISTOR 3.3K 5% .25W CF TC=0-400 | 77902 | R-25J |
| A26R68 | 0683-7525 | 6 | 2 | RESISTOR 7.5K 5% .25W CF TC=0-400 | 77902 | R-25J |
| A26R69 | 0683-7525 | 6 | | RESISTOR 7.5K 5% .25W CF TC=0-400 | 77902 | R-25J |
| A26R70 | 0683-3325 | 6 | | RESISTOR 3.3K 5% .25W CF TC=0-400 | 77902 | R-25J |
| A26R71 | 0683-1035 | 1 | 2 | RESISTOR 10K 5% .25W CF TC=0-400 | 77902 | R-25J |
| A26R72 | 0683-1535 | 6 | 2 | RESISTOR 15K 5% .25W CF TC=0-400 | 77902 | R-25J |
| A26R73 | 0683-1035 | 1 | | RESISTOR 10K 5% .25W CF TC=0-400 | 77902 | R-25J |
| A26R74 | 0683-1025 | 9 | | RESISTOR 1K 5% .25W CF TC=0-400 | 77902 | R-25J |
| A26R75 | 2100-3252 | 6 | 1 | RESISTOR-TRMR 5K 10% C TOP-ADJ 1-TRN | 32997 | 3386P-Y46-502 |
| A26R76 | 0683-1535 | 6 | | RESISTOR 15K 5% .25W CF TC=0-400 | 77902 | R-25J |
| A26R77 | 0683-3325 | 6 | | RESISTOR 3.3K 5% .25W CF TC=0-400 | 77902 | R-25J |
| A26R78 | 0683-1045 | 3 | | RESISTOR 100K 5% .25W CF TC=0-400 | 77902 | R-25J |
| A26R79 | 0683-3325 | 6 | | RESISTOR 3.3K 5% .25W CF TC=0-400 | 77902 | R-25J |
| A26R100 | 0757-0444 | 1 | 1 | RESISTOR 12.1K 1% .125W F TC=0+-100 | 19701 | SFR25H |

See introduction to this section for ordering information
* Indicates one of several possible values installed

# Table 9-3. Replaceable Parts

| Reference Designation | HP Part Number | C D | Qty. | Description | Mfr. Code | Mfr. Part Number |
|---|---|---|---|---|---|---|
| A26R101 | 0683-2725 | 8 | | RESISTOR 2.7K 5% .25W CF TC=0-400 | 77902 | R-25J |
| A26R102 | 0683-1515 | 2 | 1 | RESISTOR 150 5% .25W CF TC=0-400 | 77902 | R-25J |
| A26R103 | 0683-6215 | 9 | 1 | RESISTOR 620 5% .25W CF TC=0-400 | 77902 | R-25J |
| A26R104 | 0683-4705 | 8 | | RESISTOR 47 5% .25W CF TC=0-400 | 77902 | R-25J |
| A26R105 | 0683-4715 | 0 | | RESISTOR 470 5% .25W CF TC=0-400 | 77902 | R-25J |
| A26R107 | 0683-1525 | 4 | 10 | RESISTOR 1.5K 5% .25W CF TC=0-400 | 77902 | R-25J |
| A26R108 | 0683-2205 | 9 | | RESISTOR 22 5% .25W CF TC=0-400 | 77902 | R-25J |
| A26R109 | 0683-2735 | 0 | 1 | RESISTOR 27K 5% .25W CF TC=0-400 | 77902 | R-25J |
| A26R110 | 0683-4705 | 8 | | RESISTOR 47 5% .25W CF TC=0-400 | 77902 | R-25J |
| A26R111 | 0683-2425 | 5 | 1 | RESISTOR 2.4K 5% .25W CF TC=0-400 | 77902 | R-25J |
| A26R112 | 0683-2215 | 1 | | RESISTOR 220 5% .25W CF TC=0-400 | 77902 | R-25J |
| A26R113 | 0683-2215 | 1 | | RESISTOR 220 5% .25W CF TC=0-400 | 77902 | R-25J |
| A26R114 | 0683-1005 | 5 | 2 | RESISTOR 10 5% .25W CF TC=0-400 | 77902 | R-25J |
| A26R115 | 0683-1005 | 5 | | RESISTOR 10 5% .25W CF TC=0-400 | 77902 | R-25J |
| A26R116 | 0683-2215 | 1 | | RESISTOR 220 5% .25W CF TC=0-400 | 77902 | R-25J |
| A26R117 | 0683-1525 | 4 | | RESISTOR 1.5K 5% .25W CF TC=0-400 | 77902 | R-25J |
| A26R118 | 0683-8215 | 3 | | RESISTOR 820 5% .25W CF TC=0-400 | 77902 | R-25J |
| A26R119 | 0683-4715 | 0 | | RESISTOR 470 5% .25W CF TC=0-400 | 77902 | R-25J |
| A26R120 | 0683-4705 | 8 | | RESISTOR 47 5% .25W CF TC=0-400 | 77902 | R-25J |
| A26R121 | 0683-4705 | 8 | | RESISTOR 47 5% .25W CF TC=0-400 | 77902 | R-25J |
| A26R122 | 0757-0283 | 6 | | RESISTOR 2K 1% .125W F TC=0+-100 | 19701 | SFR25H |
| A26R123 | 0683-1015 | 7 | | RESISTOR 100 5% .25W CF TC=0-400 | 77902 | R-25J |
| A26R124 | 0683-2025 | 1 | | RESISTOR 2K 5% .25W CF TC=0-400 | 77902 | R-25J |
| A26R125 | 0683-2025 | 1 | | RESISTOR 2K 5% .25W CF TC=0-400 | 77902 | R-25J |
| A26R126 | 0683-1015 | 7 | | RESISTOR 100 5% .25W CF TC=0-400 | 77902 | R-25J |
| A26R127 | 0696-4123 | 5 | 1 | RESISTOR 499 1% .125W F TC=0+-100 | 19701 | SFR25H |
| A26R130 | 0683-1025 | 9 | | RESISTOR 1K 5% .25W CF TC=0-400 | 77902 | R-25J |
| A26R131 | 0683-1025 | 9 | | RESISTOR 1K 5% .25W CF TC=0-400 | 77902 | R-25J |
| A26R132 | 0683-1025 | 9 | | RESISTOR 1K 5% .25W CF TC=0-400 | 77902 | R-25J |
| A26R133 | 0683-4715 | 0 | | RESISTOR 470 5% .25W CF TC=0-400 | 77902 | R-25J |
| A26R134 | 0683-4715 | 0 | | RESISTOR 470 5% .25W CF TC=0-400 | 77902 | R-25J |
| A26R135 | 0683-4715 | 0 | | RESISTOR 470 5% .25W CF TC=0-400 | 77902 | R-25J |
| A26R136 | 0683-4715 | 0 | | RESISTOR 470 5% .25W CF TC=0-400 | 77902 | R-25J |
| A26R140 | 0683-1025 | 9 | | RESISTOR 1K 5% .25W CF TC=0-400 | 77902 | R-25J |
| A26R141 | 0683-1025 | 9 | | RESISTOR 1K 5% .25W CF TC=0-400 | 77902 | R-25J |
| A26R142 | 0683-1025 | 9 | | RESISTOR 1K 5% .25W CF TC=0-400 | 77902 | R-25J |
| A26R143 | 0683-1025 | 9 | | RESISTOR 1K 5% .25W CF TC=0-400 | 77902 | R-25J |
| A26R144 | 0683-1525 | 4 | | RESISTOR 1.5K 5% .25W CF TC=0-400 | 77902 | R-25J |
| A26R145 | 0683-1525 | 4 | | RESISTOR 1.5K 5% .25W CF TC=0-400 | 77902 | R-25J |
| A26R146 | 0683-1525 | 4 | | RESISTOR 1.5K 5% .25W CF TC=0-400 | 77902 | R-25J |
| A26R147 | 0683-1525 | 4 | | RESISTOR 1.5K 5% .25W CF TC=0-400 | 77902 | R-25J |
| A26R148 | 0683-1025 | 9 | | RESISTOR 1K 5% .25W CF TC=0-400 | 77902 | R-25J |
| A26R149 | 0683-1025 | 9 | | RESISTOR 1K 5% .25W CF TC=0-400 | 77902 | R-25J |
| A26R150 | 0683-1025 | 9 | | RESISTOR 1K 5% .25W CF TC=0-400 | 77902 | R-25J |
| A26R151 | 0683-1025 | 9 | | RESISTOR 1K 5% .25W CF TC=0-400 | 77902 | R-25J |
| A26R152 | 0683-1525 | 4 | | RESISTOR 1.5K 5% .25W CF TC=0-400 | 77902 | R-25J |
| A26R153 | 0683-1525 | 4 | | RESISTOR 1.5K 5% .25W CF TC=0-400 | 77902 | R-25J |
| A26R154 | 0683-1525 | 4 | | RESISTOR 1.5K 5% .25W CF TC=0-400 | 77902 | R-25J |
| A26R155 | 0683-1525 | 4 | | RESISTOR 1.5K 5% .25W CF TC=0-400 | 77902 | R-25J |
| A26R156 | 0683-4715 | 0 | | RESISTOR 470 5% .25W CF TC=0-400 | 77902 | R-25J |
| A26R157 | 0683-1325 | 2 | 2 | RESISTOR 1.3K 5% .25W CF TC=0-400 | 77902 | R-25J |
| A26R160 | 0683-1325 | 2 | | RESISTOR 1.3K 5% .25W CF TC=0-400 | 77902 | R-25J |
| A26R161 | 0683-2205 | 9 | | RESISTOR 22 5% .25W CF TC=0-400 | 77902 | R-25J |
| A26R162 | 0757-0448 | 5 | 2 | RESISTOR 18.2K 1% .125W F TC=0+-100 | 19701 | SFR25H |
| A26R163 | 0683-2205 | 9 | | RESISTOR 22 5% .25W CF TC=0-400 | 77902 | R-25J |
| A26R164 | 0757-0448 | 5 | | RESISTOR 18.2K 1% .125W F TC=0+-100 | 19701 | SFR25H |
| A26R165 | 0683-2015 | 9 | 2 | RESISTOR 200 5% .25W CF TC=0-400 | 77902 | R-25J |
| A26R166 | 0683-2015 | 9 | | RESISTOR 200 5% .25W CF TC=0-400 | 77902 | R-25J |
| A26TP1 | 1251-0600 | 0 | 15 | CONNECTOR-SGL CONT PIN 1.14-MM-BSC-SZ SQ27264 | 27264 | 16-06-0034 |
| A26TP2 | 1251-0600 | 0 | | CONNECTOR-SGL CONT PIN 1.14-MM-BSC-SZ SQ27264 | 27264 | 16-06-0034 |
| A26TP3 | 1251-0600 | 0 | | CONNECTOR-SGL CONT PIN 1.14-MM-BSC-SZ SQ27264 | 27264 | 16-06-0034 |
| A26TP4 | 1251-0600 | 0 | | CONNECTOR-SGL CONT PIN 1.14-MM-BSC-SZ SQ27264 | 27264 | 16-06-0034 |
| A26TP5 | 1251-0600 | 0 | | CONNECTOR-SGL CONT PIN 1.14-MM-BSC-SZ SQ27264 | 27264 | 16-06-0034 |
| A26TP6 | 1251-0600 | 0 | | CONNECTOR-SGL CONT PIN 1.14-MM-BSC-SZ SQ27264 | 27264 | 16-06-0034 |
| A26TP7 | 1251-0600 | 0 | | CONNECTOR-SGL CONT PIN 1.14-MM-BSC-SZ SQ27264 | 27264 | 16-06-0034 |

See introduction to this section for ordering information
* Indicates one of several possible values installed

# Table 9-3. Replaceable Parts

| Reference Designation | HP Part Number | C D | Qty. | Description | Mfr. Code | Mfr. Part Number |
|---|---|---|---|---|---|---|
| A26TP8 | 1251-0600 | 0 | | CONNECTOR-SGL CONT PIN 1.14-MM-BSC-SZ SQ27264 | 27264 | 16-06-0034 |
| A26TP9 | 1251-0600 | 0 | | CONNECTOR-SGL CONT PIN 1.14-MM-BSC-SZ SQ27264 | 27264 | 16-06-0034 |
| A26TP10 | 1251-0600 | 0 | | CONNECTOR-SGL CONT PIN 1.14-MM-BSC-SZ SQ27264 | 27264 | 16-06-0034 |
| A26TP11 | 1251-0600 | 0 | | CONNECTOR-SGL CONT PIN 1.14-MM-BSC-SZ SQ27264 | 27264 | 16-06-0034 |
| A26TP12 | 1251-0600 | 0 | | CONNECTOR-SGL CONT PIN 1.14-MM-BSC-SZ SQ27264 | 27264 | 16-06-0034 |
| A26TP13 | 1251-0600 | 0 | | CONNECTOR-SGL CONT PIN 1.14-MM-BSC-SZ SQ27264 | 27264 | 16-06-0034 |
| A26TP14 | 1251-0600 | 0 | | CONNECTOR-SGL CONT PIN 1.14-MM-BSC-SZ SQ27264 | 27264 | 16-06-0034 |
| A26TP15 | 1251-0600 | 0 | | CONNECTOR-SGL CONT PIN 1.14-MM-BSC-SZ SQ27264 | 27264 | 16-06-0034 |
| A26U1 | 1820-0803 | 2 | 1 | IC GATE ECL OR-NOR TPL | 04713 | |
| A26U2 | 1820-4159 | 9 | 2 | ICD ECL 10H016 BNCNTR P16 | 04713 | |
| A26U3 | 1820-4159 | 9 | | ICD ECL 10H016 BNCNTR P16 | 04713 | |
| A26U4 | 1820-0817 | 8 | 4 | IC FF ECL D-M/S DUAL | 04713 | |
| A26U5 | 1820-0817 | 8 | | IC FF ECL D-M/S DUAL | 04713 | |
| A26U6 | 1820-0817 | 8 | | IC FF ECL D-M/S DUAL | 04713 | |
| A26U7 | 1820-0806 | 5 | 1 | IC GATE ECL OR-NOR DUAL 4-5-INP | 04713 | |
| A26U8 | 1820-0817 | 8 | | IC FF ECL D-M/S DUAL | 04713 | |
| A26U9 | 1826-0043 | 4 | 1 | IC OP AMP GP TO-99 PKG | 27014 | |
| A26U10 | 1826-0759 | 9 | 1 | IC COMPARATOR GP QUAD 14-DIP-C PKG | 27014 | |
| A26U11 | 0955-0087 | 8 | 1 | MIX MWAV SRA-1-84 500MHZ 8 | 16239 | SRA-1-84 |
| A26U12 | 03585-60305 | 2 | 1 | PROM-DECODING | 28480 | 03585-60305 |
| | 7121-4611 | 2 | 1 | LABEL-INFORMATION .15-IN-WD .6-IN-LG | 28480 | L01003 |
| **A27** | **03585-66527** | **2** | **1** | **1ST LO VTO CONTROL PC BD ASSEMBLY** | **28480** | **03585-66527** |
| A27C1 | 0160-0128 | 3 | 2 | CAPACITOR-FXD 2.2UF +-20% 50VDC CER | 13606 | 3C37Z5U225M050A |
| A27C2 | 0140-0204 | 4 | 3 | CAPACITOR-FXD 47PF +-5% 500VDC MICA | 09023 | |
| A27C3 | 0140-0204 | 4 | | CAPACITOR-FXD 47PF +-5% 500VDC MICA | 09023 | |
| A27C4 | 0160-0128 | 3 | | CAPACITOR-FXD 2.2UF +-20% 50VDC CER | 13606 | 3C37Z5U225M050A |
| A27C5 | 0160-2199 | 2 | 1 | CAPACITOR-FXD 30PF +-5% 300VDC MICA | 00853 | |
| A27C6 | 0160-0155 | 6 | 1 | CAPACITOR-FXD 3300PF +-10% 200VDC POLYE | 15766 | HEW-238M |
| A27C7 | 0160-0503 | 8 | 1 | CAPACITOR-FXD .22UF +-2% 100VDC POLYC | 15766 | |
| A27C9 | 0180-0197 | 8 | 2 | CAPACITOR-FXD 2.2UF+-10% 20VDC TA | 13606 | 150D225X9020A2-DYS |
| A27C9 | 0180-0197 | 8 | | CAPACITOR-FXD 2.2UF+-10% 20VDC TA | 13606 | 150D225X9020A2-DYS |
| A27C10 | 0140-0204 | 4 | | CAPACITOR-FXD 47PF +-5% 500VDC MICA | 09023 | |
| A27C11 | 0180-1746 | 5 | 2 | CAPACITOR-FXD 15UF+-10% 20VDC TA | 13606 | 150D156X9020B2-DYS |
| A27C12 | 0160-6509 | 6 | 2 | C-F .1UF --% 100V CERMLr | 28480 | RPE122-977Z5U104Z100V |
| A27C13 | 0180-1746 | 5 | | CAPACITOR-FXD 15UF+-10% 20VDC TA | 13606 | 150D156X9020B2-DYS |
| A27C14 | 0160-6509 | 6 | | C-F .1UF --% 100V CERMLr | 28480 | RPE122-977Z5U104Z100V |
| A27CR1 | 1901-0040 | 1 | 2 | DIODE-SWITCHING 30V 50MA 2NS DO-35 | 9N171 | |
| A27CR2 | 1901-0040 | 1 | | DIODE-SWITCHING 30V 50MA 2NS DO-35 | 9N171 | |
| A27H1 | 03585-05227 | 1 | 1 | SHTF CVR-A27 ALSK | 28480 | 03585-05227 |
| A27H5 | 0370-2583 | 3 | 1 | MOLD KNOB-THRD F 6-32 | 04533P01 | 3001-SD |
| A27H6 | 1400-0971 | 5 | 1 | BRACKET-RTANG .452-LG .312-WD STL NI-PL | 03669P01 | |
| A27H7 | 2190-0124 | 4 | 1 | WASHER-LK INTL T NO. 10 .195-IN-ID | 98291 | 3002-26 |
| A27H8 | 2200-0101 | 0 | 2 | SCREW-MACH 4-40 .188-IN-LG PAN-HD-POZI | 83486 | |
| A27H9 | 2200-0101 | 0 | | SCREW-MACH 4-40 .188-IN-LG PAN-HD-POZI | 83486 | |
| A27H10 | 2360-0115 | 4 | 1 | SCREW-MACH 6-32 .312-IN-LG PAN-HD-POZI | 83486 | |
| A27H11 | 2950-0078 | 9 | 1 | NUT-HEX-DBL-CHAM 10-32-THD .067-IN-THK | 98291 | 33002-18-00-0-156 |
| A27J1 | 1250-2142 | 7 | 1 | CON-SMB | 74970 | 131-3701-341 |
| A27L1 | 9100-1644 | 3 | 2 | INDUCTOR RF-CH-MLD 330UH 5% .2DX.45LG | 99800 | 2500-04 |
| A27L2 | 9100-1644 | 3 | | INDUCTOR RF-CH-MLD 330UH 5% .2DX.45LG | 99800 | 2500-04 |
| A27L3 | 9140-0131 | 5 | 1 | INDUCTOR RF-CH-MLD 10MH 5% .25DX.75LG | 99800 | 2500-76 |
| A27Q1 | 1854-0071 | 7 | 2 | TRANSISTOR NPN SI PD=300MW FT=200MHZ | 13606 | |
| A27Q2 | 1853-0020 | 4 | 3 | TRANSISTOR PNP SI PD=300MW FT=150MHZ | 04713 | |
| A27Q7 | 1855-0081 | 1 | 2 | TRANSISTOR J-FET N-CHAN D-MODE SI | 04713 | SPF819 |
| A27Q8 | 1855-0081 | 1 | | TRANSISTOR J-FET N-CHAN D-MODE SI | 04713 | SPF819 |
| A27Q9 | 1853-0020 | 4 | | TRANSISTOR PNP SI PD=300MW FT=150MHZ | 04713 | |
| A27Q10 | 1854-0071 | 7 | | TRANSISTOR NPN SI PD=300MW FT=200MHZ | 13606 | |
| A27Q11 | 1853-0020 | 4 | | TRANSISTOR PNP SI PD=300MW FT=150MHZ | 04713 | |
| A27R1 | 0757-0442 | 9 | 3 | RESISTOR 10K 1% .125W F TC=0+-100 | 19701 | SFR25H |
| A27R2 | 2100-3274 | 2 | 2 | RESISTOR-TRMR 10K 10% C SIDE-ADJ 1-TRN | 32997 | 3386X-Y46-103 |
| A27R3 | 0757-0442 | 9 | | RESISTOR 10K 1% .125W F TC=0+-100 | 19701 | SFR25H |
| A27R4 | 0698-3279 | 0 | 2 | RESISTOR 4.99K 1% .125W F TC=0+-100 | 19701 | SFR25H |
| A27R5 | 0698-3279 | 0 | | RESISTOR 4.99K 1% .125W F TC=0+-100 | 19701 | SFR25H |

See introduction to this section for ordering information
* Indicates one of several possible values installed

# Table 9-3. Replaceable Parts

| Reference Designation | HP Part Number | C D | Qty. | Description | Mfr. Code | Mfr. Part Number |
|---|---|---|---|---|---|---|
| A27R6 | 0683-3625 | 9 | 1 | RESISTOR 3.6K 5% .25W CF TC=0-400 | 77902 | R-25J |
| A27R7 | 0757-0442 | 9 | | RESISTOR 10K 1% .125W F TC=0+-100 | 19701 | SFR25H |
| A27R8 | 0683-2445 | 9 | 2 | RESISTOR 240K 5% .25W CF TC=0-800 | 77902 | R-25J |
| A27R9 | 0683-2445 | 9 | | RESISTOR 240K 5% .25W CF TC=0-800 | 77902 | R-25J |
| A27R10 | 0757-0440 | 7 | 1 | RESISTOR 7.5K 1% .125W F TC=0+-100 | 19701 | SFR25H |
| A27R11 | 2100-3274 | 2 | | RESISTOR-TRMR 10K 10% C SIDE-ADJ 1-TRN | 32997 | 3386X-Y46-103 |
| A27R12 | 0683-2215 | 1 | 2 | RESISTOR 220 5% .25W CF TC=0-400 | 77902 | R-25J |
| A27R13 | 0683-2215 | 1 | | RESISTOR 220 5% .25W CF TC=0-400 | 77902 | R-25J |
| A27R14 | 0757-0283 | 6 | 2 | RESISTOR 2K 1% .125W F TC=0+-100 | 19701 | SFR25H |
| A27R15 | 0757-0283 | 6 | | RESISTOR 2K 1% .125W F TC=0+-100 | 19701 | SFR25H |
| A27R17 | 0757-0280 | 3 | 2 | RESISTOR 1K 1% .125W F TC=0+-100 | 19701 | SFR25H |
| A27R18 | 0757-0280 | 3 | | RESISTOR 1K 1% .125W F TC=0+-100 | 19701 | SFR25H |
| A27R24 | 0683-1055 | 5 | 2 | RESISTOR 1M 5% .25W CF TC=0-800 | 77902 | R-25J |
| A27R25 | 0683-1055 | 5 | | RESISTOR 1M 5% .25W CF TC=0-800 | 77902 | R-25J |
| A27R26 | 0683-4735 | 4 | 1 | RESISTOR 47K 5% .25W CF TC=0-400 | 77902 | R-25J |
| A27R27 | 0683-4745 | 6 | 1 | RESISTOR 470K 5% .25W CF TC=0-800 | 77902 | R-25J |
| A27R28 | 0683-3035 | 5 | 1 | RESISTOR 30K 5% .25W CF TC=0-400 | 77902 | R-25J |
| A27R29 | 0683-1015 | 7 | 1 | RESISTOR 100 5% .25W CF TC=0-400 | 77902 | R-25J |
| A27R30 | 0698-3582 | 8 | 1 | RESISTOR 41.2K 1% .125W F TC=0+-100 | 19701 | SFR25H |
| A27R31 | 0757-0437 | 2 | 1 | RESISTOR 4.75K 1% .125W F TC=0+-100 | 19701 | SFR25H |
| A27R32 | 0683-2025 | 1 | 1 | RESISTOR 2K 5% .25W CF TC=0-400 | 77902 | R-25J |
| A27R33 | 0683-6825 | 7 | 2 | RESISTOR 6.8K 5% .25W CF TC=0-400 | 77902 | R-25J |
| A27R34 | 0683-6825 | 7 | | RESISTOR 6.8K 5% .25W CF TC=0-400 | 77902 | R-25J |
| A27R35 | 0683-1525 | 4 | 1 | RESISTOR 1.5K 5% .25W CF TC=0-400 | 77902 | R-25J |
| A27R36 | 0683-4725 | 2 | 2 | RESISTOR 4.7K 5% .25W CF TC=0-400 | 77902 | R-25J |
| A27R37 | 0683-4725 | 2 | | RESISTOR 4.7K 5% .25W CF TC=0-400 | 77902 | R-25J |
| A27TP1 | 1251-0600 | 0 | 3 | CONNECTOR-SGL CONT PIN 1.14-MM-BSC-SZ SQ27264 | 27264 | 16-06-0034 |
| A27TP2 | 1251-0600 | 0 | | CONNECTOR-SGL CONT PIN 1.14-MM-BSC-SZ SQ27264 | 27264 | 16-06-0034 |
| A27TP3 | 1251-0600 | 0 | | CONNECTOR-SGL CONT PIN 1.14-MM-BSC-SZ SQ27264 | 27264 | 16-06-0034 |
| A27U1 | 1826-0043 | 4 | 2 | IC OP AMP GP TO-99 PKG | 27014 | |
| A27U2 | 1826-0043 | 4 | | IC OP AMP GP TO-99 PKG | 27014 | |
| A27U3 | 1820-0223 | 0 | 1 | IC OP AMP GP TO-99 PKG | 27014 | |
| | 7121-4611 | 2 | 1 | LABEL-INFORMATION .15-IN-WD .6-IN-LG | 28480 | L01003 |
| **A28** | **03585-66528** | **3** | **1** | **SUM LOOP PHASE DETECTOR PC BD ASSEMBLY** | **28480** | **03585-66528** |
| A28C1 | 0160-2207 | 3 | 1 | CAPACITOR-FXD 300PF +-5% 300VDC MICA | 00853 | |
| A28C2 | 0160-0362 | 7 | 1 | CAPACITOR-FXD 510PF +-5% 300VDC MICA | 00853 | |
| A28C3 | 0160-6509 | 6 | 10 | C-F .1UF --% 100V CERMLr | 28480 | RPE122-977Z5U104Z100V |
| A28C4 | 0160-2204 | 0 | 1 | CAPACITOR-FXD 100PF +-5% 300VDC MICA | 00853 | D153F101J |
| A28C5 | 0160-6509 | 6 | | C-F .1UF --% 100V CERMLr | 28480 | RPE122-977Z5U104Z100V |
| A28C6 | 0160-6509 | 6 | | C-F .1UF --% 100V CERMLr | 28480 | RPE122-977Z5U104Z100V |
| A28C7 | 0160-6509 | 6 | | C-F .1UF --% 100V CERMLr | 28480 | RPE122-977Z5U104Z100V |
| A28C8 | 0160-6527 | 8 | 1 | C-F .01UF --% 100V CERDCr | 28480 | DD109N90GY5U103Z100V |
| A28C9 | 0180-0197 | 8 | 4 | CAPACITOR-FXD 2.2UF+-10% 20VDC TA | 13606 | 150D225X9020A2-DYS |
| A28C10 | 0180-0197 | 8 | | CAPACITOR-FXD 2.2UF+-10% 20VDC TA | 13606 | 150D225X9020A2-DYS |
| A28C11 | 0160-0127 | 2 | 1 | CAPACITOR-FXD 1UF +-20% 25VDC CER | 04222 | SR835E105MAA |
| A28C12 | 0140-0200 | 0 | 1 | CAPACITOR-FXD 390PF +-5% 300VDC MICA | 09023 | |
| A28C13 | 0140-0208 | 8 | 1 | CAPACITOR-FXD 680PF +-5% 300VDC MICA | 09023 | |
| A28C14 | 0160-2940 | 1 | 1 | CAPACITOR-FXD 470PF +-5% 300VDC MICA | 00853 | |
| A28C15 | 0180-0197 | 8 | | CAPACITOR-FXD 2.2UF+-10% 20VDC TA | 13606 | 150D225X9020A2-DYS |
| A28C16 | 0180-0197 | 8 | | CAPACITOR-FXD 2.2UF+-10% 20VDC TA | 13606 | 150D225X9020A2-DYS |
| A28C17 | 0180-1746 | 5 | 3 | CAPACITOR-FXD 15UF+-10% 20VDC TA | 13606 | 150D156X9020B2-DYS |
| A28C18 | 0160-6509 | 6 | | C-F .1UF --% 100V CERMLr | 28480 | RPE122-977Z5U104Z100V |
| A28C19 | 0180-1746 | 5 | | CAPACITOR-FXD 15UF+-10% 20VDC TA | 13606 | 150D156X9020B2-DYS |
| A28C20 | 0160-6509 | 6 | | C-F .1UF --% 100V CERMLr | 28480 | RPE122-977Z5U104Z100V |
| A28C21 | 0180-1746 | 5 | | CAPACITOR-FXD 15UF+-10% 20VDC TA | 13606 | 150D156X9020B2-DYS |
| A28C22 | 0160-6509 | 6 | | C-F .1UF --% 100V CERMLr | 28480 | RPE122-977Z5U104Z100V |
| A28C23 | 0160-6509 | 6 | | C-F .1UF --% 100V CERMLr | 28480 | RPE122-977Z5U104Z100V |
| A28C24 | 0160-6509 | 6 | | C-F .1UF --% 100V CERMLr | 28480 | RPE122-977Z5U104Z100V |
| A28C25 | 0150-0050 | 9 | 2 | CAPACITOR-FXD 1000PF +80-20% 1KVDC CER | 59660 | 838-557-X5R-102Z |
| A28C26 | 0150-0050 | 9 | | CAPACITOR-FXD 1000PF +80-20% 1KVDC CER | 59660 | 838-557-X5R-102Z |
| A28C27 | 0160-6509 | 6 | | C-F .1UF --% 100V CERMLr | 28480 | RPE122-977Z5U104Z100V |
| A28CR1 | 1901-0347 | 1 | 4 | DIODE-SCHOTTKY SM SIG | 28480 | 1901-0347 |
| A28CR2 | 1901-0347 | 1 | | DIODE-SCHOTTKY SM SIG | 28480 | 1901-0347 |
| A28CR3 | 1901-0040 | 1 | 2 | DIODE-SWITCHING 30V 50MA 2NS DO-35 | 9N171 | |

See introduction to this section for ordering information
* Indicates one of several possible values installed

# Table 9-3. Replaceable Parts

| Reference Designation | HP Part Number | C D | Qty. | Description | Mfr. Code | Mfr. Part Number |
|---|---|---|---|---|---|---|
| A28CR4 | 1901-0040 | 1 | | DIODE-SWITCHING 30V 50MA 2NS DO-35 | 9N171 | |
| A28CR5 | 1901-0347 | 1 | | DIODE-SCHOTTKY SM SIG | 28480 | 1901-0347 |
| A28CR6 | 1901-0347 | 1 | | DIODE-SCHOTTKY SM SIG | 28480 | 1901-0347 |
| A28H1 | 03585-05228 | 2 | 1 | SHTF CVR-A28 ALSK | 28480 | 03585-05228 |
| A28H8 | 0361-0230 | 4 | 1 | RVT-STB OVHD .123D .19LG BRSTN | 12014 | R-3682 |
| A28H9 | 0370-2583 | 3 | 1 | MOLD KNOB-THRD F 6-32 | 04533P01 | 3001-SD |
| A28H10 | 1400-0971 | 5 | 2 | BRACKET-RTANG .452-LG .312-WD STL NI-PL | 03669P01 | |
| A28H11 | 1400-0971 | 5 | | BRACKET-RTANG .452-LG .312-WD STL NI-PL | 03669P01 | |
| A28H12 | 2190-0124 | 4 | 2 | WASHER-LK INTL T NO. 10 .195-IN-ID | 98291 | 3002-26 |
| A28H13 | 2190-0124 | 4 | | WASHER-LK INTL T NO. 10 .195-IN-ID | 98291 | 3002-26 |
| A28H14 | 2200-0101 | 0 | 2 | SCREW-MACH 4-40 .188-IN-LG PAN-HD-POZI | 83486 | |
| A28H15 | 2200-0101 | 0 | | SCREW-MACH 4-40 .188-IN-LG PAN-HD-POZI | 83486 | |
| A28H16 | 2950-0078 | 9 | 2 | NUT-HEX-DBL-CHAM 10-32-THD .067-IN-THK | 98291 | 33002-18-00-0-156 |
| A28H17 | 2950-0078 | 9 | | NUT-HEX-DBL-CHAM 10-32-THD .067-IN-THK | 98291 | 33002-18-00-0-156 |
| A28J1 | 1250-2142 | 7 | 2 | CON-SMB | 74970 | 131-3701-341 |
| A28J2 | 1250-2142 | 7 | | CON-SMB | 74970 | 131-3701-341 |
| A28L1 | 9100-1615 | 8 | 1 | INDUCTOR RF-CH-MLD 1.2UH 10% | 99800 | 1537-14 |
| A28L2 | 9100-1641 | 0 | 2 | INDUCTOR RF-CH-MLD 240UH 5% .166DX.385LG99800 | 99800 | 1537-94 |
| A28L3 | 9100-1641 | 0 | | INDUCTOR RF-CH-MLD 240UH 5% .166DX.385LG99800 | 99800 | 1537-94 |
| A28L4 | 9140-0210 | 1 | 2 | INDUCTOR RF-CH-MLD 100UH 5% .166DX.385LG99800 | 99800 | 1537-76 |
| A28L5 | 9140-0748 | 0 | 1 | INDUCTOR 250UH 25% .25DX.5LG Q=3 | 24226 | CA-253-5 |
| A28L6 | 9140-0210 | 1 | | INDUCTOR RF-CH-MLD 100UH 5% .166DX.385LG99800 | 99800 | 1537-76 |
| A28Q1 | 1853-0405 | 9 | 3 | TRANSISTOR PNP SI PD=300MW FT=850MHZ | 04713 | |
| A28Q2 | 1853-0405 | 9 | | TRANSISTOR PNP SI PD=300MW FT=850MHZ | 04713 | |
| A28Q3 | 1853-0405 | 9 | | TRANSISTOR PNP SI PD=300MW FT=850MHZ | 04713 | |
| A28Q4 | 1853-0086 | 2 | 2 | TRANSISTOR PNP SI PD=310MW FT=40MHZ | 04713 | |
| A28Q5 | 1854-0071 | 7 | 2 | TRANSISTOR NPN SI PD=300MW FT=200MHZ | 13606 | |
| A28Q6 | 1853-0086 | 2 | | TRANSISTOR PNP SI PD=310MW FT=40MHZ | 04713 | |
| A28Q7 | 1854-0071 | 7 | | TRANSISTOR NPN SI PD=300MW FT=200MHZ | 13606 | |
| A28R1 | 0683-2025 | 1 | 9 | RESISTOR 2K 5% .25W CF TC=0-400 | 77902 | R-25J |
| A28R2 | 0683-1025 | 9 | 5 | RESISTOR 1K 5% .25W CF TC=0-400 | 77902 | R-25J |
| A28R3 | 0683-7515 | 4 | 1 | RESISTOR 750 5% .25W CF TC=0-400 | 77902 | R-25J |
| A28R4 | 0683-1025 | 9 | | RESISTOR 1K 5% .25W CF TC=0-400 | 77902 | R-25J |
| A28R5 | 0683-2025 | 1 | | RESISTOR 2K 5% .25W CF TC=0-400 | 77902 | R-25J |
| A28R6 | 0683-1025 | 9 | | RESISTOR 1K 5% .25W CF TC=0-400 | 77902 | R-25J |
| A28R7 | 0683-1025 | 9 | | RESISTOR 1K 5% .25W CF TC=0-400 | 77902 | R-25J |
| A28R8 | 0683-4705 | 8 | 2 | RESISTOR 47 5% .25W CF TC=0-400 | 77902 | R-25J |
| A28R9 | 0683-4715 | 0 | 2 | RESISTOR 470 5% .25W CF TC=0-400 | 77902 | R-25J |
| A28R10 | 0683-8215 | 3 | 1 | RESISTOR 820 5% .25W CF TC=0-400 | 77902 | R-25J |
| A28R11 | 0683-4705 | 8 | | RESISTOR 47 5% .25W CF TC=0-400 | 77902 | R-25J |
| A28R12 | 0683-4715 | 0 | | RESISTOR 470 5% .25W CF TC=0-400 | 77902 | R-25J |
| A28R13 | 0683-3315 | 4 | 1 | RESISTOR 330 5% .25W CF TC=0-400 | 77902 | R-25J |
| A28R14 | 0683-2025 | 1 | | RESISTOR 2K 5% .25W CF TC=0-400 | 77902 | R-25J |
| A28R15 | 0683-3025 | 3 | 1 | RESISTOR 3K 5% .25W CF TC=0-400 | 77902 | R-25J |
| A28R16 | 0683-1025 | 9 | | RESISTOR 1K 5% .25W CF TC=0-400 | 77902 | R-25J |
| A28R17 | 0698-3279 | 0 | 2 | RESISTOR 4.99K 1% .125W F TC=0+-100 | 19701 | SFR25H |
| A28R18 | 0698-4486 | 3 | 2 | RESISTOR 24.9K 1% .125W F TC=0+-100 | 91637 | CMF-55-1, T-1 |
| A28R19 | 0698-4463 | 6 | 1 | RESISTOR 845 1% .125W F TC=0+-100 | 91637 | CMF-55-1, T-1 |
| A28R20 | 0698-4486 | 3 | | RESISTOR 24.9K 1% .125W F TC=0+-100 | 91637 | CMF-55-1, T-1 |
| A28R21 | 0698-3279 | 0 | | RESISTOR 4.99K 1% .125W F TC=0+-100 | 19701 | SFR25H |
| A28R22 | 0757-0442 | 9 | 1 | RESISTOR 10K 1% .125W F TC=0+-100 | 19701 | SFR25H |
| A28R23 | 0757-0161 | 9 | 1 | RESISTOR 604 1% .125W F TC=0+-100 | 19701 | SFR25H |
| A28R24 | 0683-2205 | 9 | 1 | RESISTOR 22 5% .25W CF TC=0-400 | 77902 | R-25J |
| A28R25 | 0683-2025 | 1 | | RESISTOR 2K 5% .25W CF TC=0-400 | 77902 | R-25J |
| A28R26 | 0683-2025 | 1 | | RESISTOR 2K 5% .25W CF TC=0-400 | 77902 | R-25J |
| A28R27 | 0683-2025 | 1 | | RESISTOR 2K 5% .25W CF TC=0-400 | 77902 | R-25J |
| A28R28 | 0683-2025 | 1 | | RESISTOR 2K 5% .25W CF TC=0-400 | 77902 | R-25J |
| A28R29 | 0683-2025 | 1 | | RESISTOR 2K 5% .25W CF TC=0-400 | 77902 | R-25J |
| A28R30 | 0683-1035 | 1 | 4 | RESISTOR 10K 5% .25W CF TC=0-400 | 77902 | R-25J |
| A28R31 | 0683-1535 | 6 | 3 | RESISTOR 15K 5% .25W CF TC=0-400 | 77902 | R-25J |
| A28R32 | 0683-2715 | 6 | 2 | RESISTOR 270 5% .25W CF TC=0-400 | 77902 | R-25J |
| A28R33 | 0683-1535 | 6 | | RESISTOR 15K 5% .25W CF TC=0-400 | 77902 | R-25J |
| A28R34 | 0683-2715 | 6 | | RESISTOR 270 5% .25W CF TC=0-400 | 77902 | R-25J |
| A28R35 | 0683-7525 | 6 | 1 | RESISTOR 7.5K 5% .25W CF TC=0-400 | 77902 | R-25J |
| A28R36 | 0683-1535 | 6 | | RESISTOR 15K 5% .25W CF TC=0-400 | 77902 | R-25J |

See introduction to this section for ordering information
* Indicates one of several possible values installed

# Table 9-3. Replaceable Parts

| Reference Designation | HP Part Number | C D | Qty. | Description | Mfr. Code | Mfr. Part Number |
|---|---|---|---|---|---|---|
| A28R37 | 0683-1035 | 1 | | RESISTOR 10K 5% .25W CF TC=0-400 | 77902 | R-25J |
| A28R38 | 0683-1035 | 1 | | RESISTOR 10K 5% .25W CF TC=0-400 | 77902 | R-25J |
| A28R39 | 0683-2025 | 1 | | RESISTOR 2K 5% .25W CF TC=0-400 | 77902 | R-25J |
| A28R40 | 0683-1035 | 1 | | RESISTOR 10K 5% .25W CF TC=0-400 | 77902 | R-25J |
| A28R41 | 0683-1045 | 3 | 1 | RESISTOR 100K 5% .25W CF TC=0-400 | 77902 | R-25J |
| A28TP1 | 1251-0600 | 0 | 6 | CONNECTOR-SGL CONT PIN 1.14-MM-BSC-SZ SQ27264 | 27264 | 16-06-0034 |
| A28TP2 | 1251-0600 | 0 | | CONNECTOR-SGL CONT PIN 1.14-MM-BSC-SZ SQ27264 | 27264 | 16-06-0034 |
| A28TP3 | 1251-0600 | 0 | | CONNECTOR-SGL CONT PIN 1.14-MM-BSC-SZ SQ27264 | 27264 | 16-06-0034 |
| A28TP4 | 1251-0600 | 0 | | CONNECTOR-SGL CONT PIN 1.14-MM-BSC-SZ SQ27264 | 27264 | 16-06-0034 |
| A28TP5 | 1251-0600 | 0 | | CONNECTOR-SGL CONT PIN 1.14-MM-BSC-SZ SQ27264 | 27264 | 16-06-0034 |
| A28TP6 | 1251-0600 | 0 | | CONNECTOR-SGL CONT PIN 1.14-MM-BSC-SZ SQ27264 | 27264 | 16-06-0034 |
| A28U1 | 1820-0810 | 1 | 1 | IC RCVR ECL LINE RCVR TPL 2-INP | 04713 | |
| A28U2 | 1820-0817 | 8 | 1 | IC FF ECL D-M/S DUAL | 04713 | |
| A28U3 | 1826-0759 | 9 | 1 | IC COMPARATOR GP QUAD 14-DIP-C PKG | 27014 | |
| | 7121-4611 | 2 | 1 | LABEL-INFORMATION .15-IN-WD .6-IN-LG | 28480 | L01003 |
| **A31** | **03585-66531** | **8** | **1** | **VTO % DIVIDERS PC BD ASSEMBLY** | **28480** | **03585-66531** |
| A31C1 | 0160-3847 | 9 | 8 | CAPACITOR-FXD .01UF +100-0% 50VDC CER | 04222 | SA105C103KAA |
| A31C2 | 0160-3847 | 9 | | CAPACITOR-FXD .01UF +100-0% 50VDC CER | 04222 | SA105C103KAA |
| A31C3 | 0160-6641 | 7 | 1 | C-F 47PF 5% 500V MICAs | 57582 | HP15470J5ST |
| A31C4 | 0160-3847 | 9 | | CAPACITOR-FXD .01UF +100-0% 50VDC CER | 04222 | SA105C103KAA |
| A31C5 | 0160-6662 | 2 | 1 | C-F 100PF 5% 300V MICAc | 57582 | HP15101J3ST |
| A31C6 | 0160-6695 | 1 | 1 | C-F .01UF 10% 100V CERMLr | 28480 | RPE121-978X7R103K100V |
| A31C7 | 0160-3847 | 9 | | CAPACITOR-FXD .01UF +100-0% 50VDC CER | 04222 | SA105C103KAA |
| A31C8 | 0160-6693 | 9 | 3 | C-F 1000PF 10%1000V CERDCr | 09859P01 | 562CQC102AF102KA04 |
| A31C9 | 0160-6693 | 9 | | C-F 1000PF 10%1000V CERDCr | 09859P01 | 562CQC102AF102KA04 |
| A31C10 | 0160-6693 | 9 | | C-F 1000PF 10%1000V CERDCr | 09859P01 | 562CQC102AF102KA04 |
| A31C11 | 0160-0503 | 8 | 1 | CAPACITOR-FXD .22UF +-2% 100VDC POLYC | 15766 | |
| A31C12 | 0180-1794 | 3 | 3 | CAPACITOR-FXD 22UF+-10% 35VDC TA | 13606 | 150D226X9035R2-DYS |
| A31C13 | 0160-6659 | 7 | 1 | C-F 30PF 5% 300V MICAs | 57582 | HP15300J3ST |
| A31C14 | 0160-6509 | 6 | 1 | C-F .1UF --% 100V CERMLr | 28480 | RPE122-977Z5U104Z100V |
| A31C15 | 0160-3847 | 9 | | CAPACITOR-FXD .01UF +100-0% 50VDC CER | 04222 | SA105C103KAA |
| A31C16 | 0160-3847 | 9 | | CAPACITOR-FXD .01UF +100-0% 50VDC CER | 04222 | SA105C103KAA |
| A31C17 | 0160-4571 | 8 | 6 | CAPACITOR-FXD .1UF +80-20% 50VDC CER | 04222 | SA105E104ZAA |
| A31C18 | 0160-4571 | 8 | | CAPACITOR-FXD .1UF +80-20% 50VDC CER | 04222 | SA105E104ZAA |
| A31C19 | 0160-4571 | 8 | | CAPACITOR-FXD .1UF +80-20% 50VDC CER | 04222 | SA105E104ZAA |
| A31C20 | 0160-4571 | 8 | | CAPACITOR-FXD .1UF +80-20% 50VDC CER | 04222 | SA105E104ZAA |
| A31C21 | 0160-3847 | 9 | | CAPACITOR-FXD .01UF +100-0% 50VDC CER | 04222 | SA105C103KAA |
| A31C22 | 0160-4571 | 8 | | CAPACITOR-FXD .1UF +80-20% 50VDC CER | 04222 | SA105E104ZAA |
| A31C23 | 0160-3847 | 9 | | CAPACITOR-FXD .01UF +100-0% 50VDC CER | 04222 | SA105C103KAA |
| A31C24 | 0180-0228 | 6 | 1 | CAPACITOR-FXD 22UF+-10% 15VDC TA | 13606 | 150D226X9015B2-DYS |
| A31C25 | 0180-1794 | 3 | | CAPACITOR-FXD 22UF+-10% 35VDC TA | 13606 | 150D226X9035R2-DYS |
| A31C26 | 0180-1794 | 3 | | CAPACITOR-FXD 22UF+-10% 35VDC TA | 13606 | 150D226X9035R2-DYS |
| A31C27 | 0160-4571 | 8 | | CAPACITOR-FXD .1UF +80-20% 50VDC CER | 04222 | SA105E104ZAA |
| A31C29 | 0160-0945 | 2 | 2 | CAPACITOR-FXD 910PF +-5% 100VDC MICA | 09023 | |
| A31C30 | 0160-0300 | 3 | 1 | CAPACITOR-FXD 2700PF +-10% 200VDC POLYE | 15766 | HEW-238M |
| A31C31 | 0160-0154 | 5 | 1 | CAPACITOR-FXD 2200PF +-10% 200VDC POLYE | 15766 | HEW-238M |
| A31C32 | 0160-6655 | 3 | 2 | C-F 510PF 5% 300V MICAs | 57582 | HP15511J3ST |
| A31C33 | 0160-0299 | 9 | 1 | CAPACITOR-FXD 1800PF +-10% 200VDC POLYE | 15766 | HEW-238M |
| A31C34 | 0160-6689 | 3 | 2 | C-F 2.2UF 20% 50V CERMLr | 28480 | RPE114-907Z5U225M50V |
| A31C35 | 0160-6689 | 3 | | C-F 2.2UF 20% 50V CERMLr | 28480 | RPE114-907Z5U225M50V |
| A31C36 | 0160-0945 | 2 | | CAPACITOR-FXD 910PF +-5% 100VDC MICA | 09023 | |
| A31C37 | 0160-6655 | 3 | | C-F 510PF 5% 300V MICAs | 57582 | HP15511J3ST |
| A31C38 | 0160-4791 | 4 | 2 | CAPACITOR-FXD 10PF +-5% 100VDC CER 0+-3004222 | 04222 | SA106A100JAA |
| A31C39 | 0160-4791 | 4 | | CAPACITOR-FXD 10PF +-5% 100VDC CER 0+-3004222 | 04222 | SA106A100JAA |
| A31CR1 | 0122-0333 | 2 | 2 | DIODE-VVC 29PF 10% C3/C10-MIN=2.1 | 10978P01 | |
| A31CR2 | 0122-0333 | 2 | | DIODE-VVC 29PF 10% C3/C10-MIN=2.1 | 10978P01 | |
| A31CR3 | 1901-0040 | 1 | 1 | DIODE-SWITCHING 30V 50MA 2NS DO-35 | 9N171 | |
| A31CR4 | 1901-0518 | 8 | 1 | DIODE-SCHOTTKY SM SIG | 28480 | 1901-0518 |
| A31E1 | 0380-0938 | 9 | 1 | INSULATOR-FLG-BSHG TFE | 98291 | 119-0053 |
| A31E2 | 5001-0176 | 0 | 1 | STMP GRD STRAP | 28480 | 5001-0176 |
| A31H1 | 2190-0124 | 4 | 4 | WASHER-LK INTL T NO. 10 .195-IN-ID | 98291 | 3002-26 |
| A31H1A | 2950-0078 | 9 | 4 | NUT-HEX-DBL-CHAM 10-32-THD .067-IN-THK | 98291 | 33002-18-00-0-156 |
| A31H2 | 2190-0124 | 4 | | WASHER-LK INTL T NO. 10 .195-IN-ID | 98291 | 3002-26 |
| A31H2A | 2950-0078 | 9 | | NUT-HEX-DBL-CHAM 10-32-THD .067-IN-THK | 98291 | 33002-18-00-0-156 |
| A31H3 | 2190-0124 | 4 | | WASHER-LK INTL T NO. 10 .195-IN-ID | 98291 | 3002-26 |
| A31H3A | 2950-0078 | 9 | | NUT-HEX-DBL-CHAM 10-32-THD .067-IN-THK | 98291 | 33002-18-00-0-156 |

See introduction to this section for ordering information
* Indicates one of several possible values installed

# Table 9-3. Replaceable Parts

| Reference Designation | HP Part Number | C D | Qty. | Description | Mfr. Code | Mfr. Part Number |
|---|---|---|---|---|---|---|
| A31H4 | 2190-0124 | 4 | | WASHER-LK INTL T NO. 10 .195-IN-ID | 98291 | 3002-26 |
| A31H4A | 2950-0078 | 9 | | NUT-HEX-DBL-CHAM 10-32-THD .067-IN-THK | 98291 | 33002-18-00-0-156 |
| A31J1 | 1250-2142 | 7 | 4 | CON-SMB | 74970 | 131-3701-341 |
| A31J2 | 1250-2142 | 7 | | CON-SMB | 74970 | 131-3701-341 |
| A31J3 | 1250-2142 | 7 | | CON-SMB | 74970 | 131-3701-341 |
| A31J4 | 1250-2142 | 7 | | CON-SMB | 74970 | 131-3701-341 |
| A31L1 | 9100-0539 | 3 | 7 | INDUCTOR RF-CH-MLD 10UH 5% .156DX.375LG | 24226 | 15M102J |
| A31L2 | 9100-0539 | 3 | | INDUCTOR RF-CH-MLD 10UH 5% .156DX.375LG | 24226 | 15M102J |
| A31L3 | 9140-0257 | 6 | 1 | COIL-VAR 297NH-363NH Q=140 PC-MTG | 55940 | Q2.33TAPPED |
| A31L6 | 9100-0539 | 3 | | INDUCTOR RF-CH-MLD 10UH 5% .156DX.375LG | 24226 | 15M102J |
| A31L7 | 9100-0539 | 3 | | INDUCTOR RF-CH-MLD 10UH 5% .156DX.375LG | 24226 | 15M102J |
| A31L8 | 9100-0539 | 3 | | INDUCTOR RF-CH-MLD 10UH 5% .156DX.375LG | 24226 | 15M102J |
| A31L9 | 9100-0539 | 3 | | INDUCTOR RF-CH-MLD 10UH 5% .156DX.375LG | 24226 | 15M102J |
| A31L10 | 9100-1618 | 1 | 1 | INDUCTOR RF-CH-MLD 5.6UH 10% | 99800 | 1537-30 |
| A31L11 | 9140-0210 | 1 | 2 | INDUCTOR RF-CH-MLD 100UH 5% .166DX.385LG99800 | 99800 | 1537-76 |
| A31L12 | 9140-0210 | 1 | | INDUCTOR RF-CH-MLD 100UH 5% .166DX.385LG99800 | 99800 | 1537-76 |
| A31L13 | 9100-0539 | 3 | | INDUCTOR RF-CH-MLD 10UH 5% .156DX.375LG | 24226 | 15M102J |
| A31L15 | 9100-1663 | 6 | 1 | INDUCTOR RF-CH-MLD 2.7MH 5% .23DX.57LG | 99800 | 2500-48 |
| A31L16 | 9100-1658 | 9 | 1 | INDUCTOR RF-CH-MLD 1.6MH 5% .23DX.57LG | 99800 | 2500-38 |
| A31Q1 | 1854-0351 | 6 | 1 | TRANSISTOR NPN SI TO-18 PD=360MW | 04713 | |
| A31Q2 | 1854-1140 | 3 | 1 | XTR SML1NPN | 04713 | SPS212RLRA |
| A31Q3 | 1854-0071 | 7 | 1 | TRANSISTOR NPN SI PD=300MW FT=200MHZ | 13606 | |
| A31Q5 | 1853-0564 | 1 | 1 | TRANSISTOR PNP SI PD=300MW FT=150MHZ | 04713 | |
| A31R1 | 0683-4315 | 6 | 1 | RESISTOR 430 5% .25W CF TC=0-400 | 77902 | R-25J |
| A31R2 | 0683-3025 | 3 | 3 | RESISTOR 3K 5% .25W CF TC=0-400 | 77902 | R-25J |
| A31R3 | 0683-4705 | 8 | 5 | RESISTOR 47 5% .25W CF TC=0-400 | 77902 | R-25J |
| A31R4 | 0683-2025 | 1 | 1 | RESISTOR 2K 5% .25W CF TC=0-400 | 77902 | R-25J |
| A31R5 | 0683-1025 | 9 | 26 | RESISTOR 1K 5% .25W CF TC=0-400 | 77902 | R-25J |
| A31R6 | 0683-1525 | 4 | 2 | RESISTOR 1.5K 5% .25W CF TC=0-400 | 77902 | R-25J |
| A31R7 | 0683-1025 | 9 | | RESISTOR 1K 5% .25W CF TC=0-400 | 77902 | R-25J |
| A31R8 | 0683-1025 | 9 | | RESISTOR 1K 5% .25W CF TC=0-400 | 77902 | R-25J |
| A31R9 | 0683-1025 | 9 | | RESISTOR 1K 5% .25W CF TC=0-400 | 77902 | R-25J |
| A31R10 | 0683-1025 | 9 | | RESISTOR 1K 5% .25W CF TC=0-400 | 77902 | R-25J |
| A31R11 | 0683-1525 | 4 | | RESISTOR 1.5K 5% .25W CF TC=0-400 | 77902 | R-25J |
| A31R12 | 0683-5625 | 3 | 1 | RESISTOR 5.6K 5% .25W CF TC=0-400 | 77902 | R-25J |
| A31R13 | 0683-4335 | 0 | 1 | RESISTOR 43K 5% .25W CF TC=0-400 | 77902 | R-25J |
| A31R14 | 0683-1025 | 9 | | RESISTOR 1K 5% .25W CF TC=0-400 | 77902 | R-25J |
| A31R15 | 0683-1025 | 9 | | RESISTOR 1K 5% .25W CF TC=0-400 | 77902 | R-25J |
| A31R16 | 0698-3447 | 4 | 1 | RESISTOR 422 1% .125W F TC=0+-100 | 19701 | SFR25H |
| A31R17 | 0683-2035 | 3 | 2 | RESISTOR 20K 5% .25W CF TC=0-400 | 77902 | R-25J |
| A31R18 | 0683-2035 | 3 | | RESISTOR 20K 5% .25W CF TC=0-400 | 77902 | R-25J |
| A31R19 | 0683-4705 | 8 | | RESISTOR 47 5% .25W CF TC=0-400 | 77902 | R-25J |
| A31R20 | 0757-0419 | 0 | 1 | RESISTOR 681 1% .125W F TC=0+-100 | 19701 | SFR25H |
| A31R21 | 0698-3162 | 0 | 1 | RESISTOR 46.4K 1% .125W F TC=0+-100 | 19701 | SFR25H |
| A31R22 | 0757-0442 | 9 | 1 | RESISTOR 10K 1% .125W F TC=0+-100 | 19701 | SFR25H |
| A31R23 | 0698-3160 | 8 | 1 | RESISTOR 31.6K 1% .125W F TC=0+-100 | 19701 | SFR25H |
| A31R24 | 0757-0460 | 1 | 1 | RESISTOR 61.9K 1% .125W F TC=0+-100 | 19701 | SFR25H |
| A31R26 | 0683-4705 | 8 | | RESISTOR 47 5% .25W CF TC=0-400 | 77902 | R-25J |
| A31R27 | 0683-1025 | 9 | | RESISTOR 1K 5% .25W CF TC=0-400 | 77902 | R-25J |
| A31R28 | 0683-2425 | 5 | 1 | RESISTOR 2.4K 5% .25W CF TC=0-400 | 77902 | R-25J |
| A31R29 | 0683-1015 | 7 | 6 | RESISTOR 100 5% .25W CF TC=0-400 | 77902 | R-25J |
| A31R30 | 0683-4705 | 8 | | RESISTOR 47 5% .25W CF TC=0-400 | 77902 | R-25J |
| A31R31 | 0683-4715 | 0 | 2 | RESISTOR 470 5% .25W CF TC=0-400 | 77902 | R-25J |
| A31R32 | 0683-1025 | 9 | | RESISTOR 1K 5% .25W CF TC=0-400 | 77902 | R-25J |
| A31R34 | 0683-1025 | 9 | | RESISTOR 1K 5% .25W CF TC=0-400 | 77902 | R-25J |
| A31R35 | 0683-1025 | 9 | | RESISTOR 1K 5% .25W CF TC=0-400 | 77902 | R-25J |
| A31R36 | 0683-1825 | 7 | 1 | RESISTOR 1.8K 5% .25W CF TC=0-400 | 77902 | R-25J |
| A31R37 | 0683-1025 | 9 | | RESISTOR 1K 5% .25W CF TC=0-400 | 77902 | R-25J |
| A31R38 | 0683-1025 | 9 | | RESISTOR 1K 5% .25W CF TC=0-400 | 77902 | R-25J |
| A31R39 | 0683-1025 | 9 | | RESISTOR 1K 5% .25W CF TC=0-400 | 77902 | R-25J |
| A31R40 | 0683-1025 | 9 | | RESISTOR 1K 5% .25W CF TC=0-400 | 77902 | R-25J |
| A31R41 | 0683-1025 | 9 | | RESISTOR 1K 5% .25W CF TC=0-400 | 77902 | R-25J |
| A31R42 | 0683-1025 | 9 | | RESISTOR 1K 5% .25W CF TC=0-400 | 77902 | R-25J |
| A31R43 | 0683-4715 | 0 | | RESISTOR 470 5% .25W CF TC=0-400 | 77902 | R-25J |
| A31R44 | 0683-4705 | 8 | | RESISTOR 47 5% .25W CF TC=0-400 | 77902 | R-25J |

See introduction to this section for ordering information
* Indicates one of several possible values installed

# Table 9-3. Replaceable Parts

| Reference Designation | HP Part Number | C D | Qty. | Description | Mfr. Code | Mfr. Part Number |
|---|---|---|---|---|---|---|
| A31R45 | 0683-1025 | 9 | | RESISTOR 1K 5% .25W CF TC=0-400 | 77902 | R-25J |
| A31R46 | 0683-1025 | 9 | | RESISTOR 1K 5% .25W CF TC=0-400 | 77902 | R-25J |
| A31R47 | 0683-1025 | 9 | | RESISTOR 1K 5% .25W CF TC=0-400 | 77902 | R-25J |
| A31R48 | 0683-1025 | 9 | | RESISTOR 1K 5% .25W CF TC=0-400 | 77902 | R-25J |
| A31R50 | 0757-0438 | 3 | 1 | RESISTOR 5.11K 1% .125W F TC=0+-100 | 19701 | SFR25H |
| A31R51 | 0757-0449 | 6 | 1 | RESISTOR 20K 1% .125W F TC=0+-100 | 19701 | SFR25H |
| A31R52 | 0698-3558 | 8 | 1 | RESISTOR 4.02K 1% .125W F TC=0+-100 | 19701 | SFR25H |
| A31R53 | 0683-4735 | 4 | 1 | RESISTOR 47K 5% .25W CF TC=0-400 | 77902 | R-25J |
| A31R54 | 0683-7525 | 6 | 1 | RESISTOR 7.5K 5% .25W CF TC=0-400 | 77902 | R-25J |
| A31R55 | 0683-1035 | 1 | 1 | RESISTOR 10K 5% .25W CF TC=0-400 | 77902 | R-25J |
| A31R60 | 0683-2225 | 3 | 1 | RESISTOR 2.2K 5% .25W CF TC=0-400 | 77902 | R-25J |
| A31R61 | 0683-2235 | 5 | 1 | RESISTOR 22K 5% .25W CF TC=0-400 | 77902 | R-25J |
| A31R62 | 0683-1045 | 3 | 1 | RESISTOR 100K 5% .25W CF TC=0-400 | 77902 | R-25J |
| A31R63 | 0683-1025 | 9 | | RESISTOR 1K 5% .25W CF TC=0-400 | 77902 | R-25J |
| A31R64 | 0683-1025 | 9 | | RESISTOR 1K 5% .25W CF TC=0-400 | 77902 | R-25J |
| A31R65 | 0683-2045 | 5 | 1 | RESISTOR 200K 5% .25W CF TC=0-800 | 77902 | R-25J |
| A31R66 | 0683-1025 | 9 | | RESISTOR 1K 5% .25W CF TC=0-400 | 77902 | R-25J |
| A31R67 | 0683-1015 | 7 | | RESISTOR 100 5% .25W CF TC=0-400 | 77902 | R-25J |
| A31R68 | 0683-1025 | 9 | | RESISTOR 1K 5% .25W CF TC=0-400 | 77902 | R-25J |
| A31R70 | 0698-4445 | 4 | 1 | RESISTOR 5.76K 1% .125W F TC=0+-100 | 91637 | CMF-55-1, T-1 |
| A31R71 | 0683-1015 | 7 | | RESISTOR 100 5% .25W CF TC=0-400 | 77902 | R-25J |
| A31R72 | 0683-1015 | 7 | | RESISTOR 100 5% .25W CF TC=0-400 | 77902 | R-25J |
| A31R73 | 0683-1015 | 7 | | RESISTOR 100 5% .25W CF TC=0-400 | 77902 | R-25J |
| A31R75 | 0683-3025 | 3 | | RESISTOR 3K 5% .25W CF TC=0-400 | 77902 | R-25J |
| A31R76 | 0683-3025 | 3 | | RESISTOR 3K 5% .25W CF TC=0-400 | 77902 | R-25J |
| A31R77 | 0683-1025 | 9 | | RESISTOR 1K 5% .25W CF TC=0-400 | 77902 | R-25J |
| A31R78 | 0683-2015 | 9 | 1 | RESISTOR 200 5% .25W CF TC=0-400 | 77902 | R-25J |
| A31R79 | 0683-1015 | 7 | | RESISTOR 100 5% .25W CF TC=0-400 | 77902 | R-25J |
| A31TP1 | 1251-0600 | 0 | 3 | CONNECTOR-SGL CONT PIN 1.14-MM-BSC-SZ SQ27264 | 27264 | 16-06-0034 |
| A31TP2 | 1251-0600 | 0 | | CONNECTOR-SGL CONT PIN 1.14-MM-BSC-SZ SQ27264 | 27264 | 16-06-0034 |
| A31TP3 | 1251-0600 | 0 | | CONNECTOR-SGL CONT PIN 1.14-MM-BSC-SZ SQ27264 | 27264 | 16-06-0034 |
| A31U1 | 1820-1225 | 4 | 1 | IC FF ECL D-M/S DUAL | 04713 | |
| A31U2 | 1820-0806 | 5 | 3 | IC GATE ECL OR-NOR DUAL 4-5-INP | 04713 | |
| A31U3 | 1820-1204 | 9 | 1 | IC GATE TTL LS NAND DUAL 4-INP | 01295 | |
| A31U4 | 1820-0806 | 5 | | IC GATE ECL OR-NOR DUAL 4-5-INP | 04713 | |
| A31U5 | 1820-0806 | 5 | | IC GATE ECL OR-NOR DUAL 4-5-INP | 04713 | |
| A31U6 | 1820-0477 | 6 | 2 | IC OP AMP GP 8-DIP-P PKG | 27014 | |
| A31U7 | 1820-0817 | 8 | 3 | IC FF ECL D-M/S DUAL | 04713 | |
| A31U8 | 1820-0817 | 8 | | IC FF ECL D-M/S DUAL | 04713 | |
| A31U9 | 1820-0817 | 8 | | IC FF ECL D-M/S DUAL | 04713 | |
| A31U10 | 1826-0759 | 9 | 1 | IC COMPARATOR GP QUAD 14-DIP-C PKG | 27014 | |
| A31U11 | 1820-0477 | 6 | | IC OP AMP GP 8-DIP-P PKG | 27014 | |
| | 4330-0496 | 3 | 2 | INSULATOR-BEAD GLASS | 53101 | KG12 |
| | 03585-05231 | 7 | 1 | SHTF CVR-A31 ALSK | 28480 | 03585-05231 |
| | 0370-2583 | 3 | 1 | MOLD KNOB-THRD F 6-32 | 04533P01 | 3001-SD |
| | 7121-4611 | 2 | 1 | LABEL-INFORMATION .15-IN-WD .6-IN-LG | 28480 | L01003 |
| **A32** | **03585-66532** | **9** | **1** | **ANALOG PC BD ASSEMBLY** | **28480** | **03585-66532** |
| A32C1 | 0160-2204 | 0 | 3 | CAPACITOR-FXD 100PF +-5% 300VDC MICA | 00853 | D153F101J |
| A32C2 | 0160-2204 | 0 | | CAPACITOR-FXD 100PF +-5% 300VDC MICA | 00853 | D153F101J |
| A32C3 | 0160-6509 | 6 | 12 | C-F .1UF --% 100V CERMLr | 28480 | RPE122-977Z5U104Z100V |
| A32C4 | 0160-6509 | 6 | | C-F .1UF --% 100V CERMLr | 28480 | RPE122-977Z5U104Z100V |
| A32C5 | 0160-6509 | 6 | | C-F .1UF --% 100V CERMLr | 28480 | RPE122-977Z5U104Z100V |
| A32C6 | 0160-6509 | 6 | | C-F .1UF --% 100V CERMLr | 28480 | RPE122-977Z5U104Z100V |
| A32C7 | 0160-2257 | 3 | 1 | CAPACITOR-FXD 10PF +-5% 500VDC CER 0+-6052763 | 52763 | |
| A32C8 | 0160-0503 | 8 | 1 | CAPACITOR-FXD .22UF +-2% 100VDC POLYC | 15766 | |
| A32C9 | 0160-4461 | 5 | 1 | CAPACITOR-FXD 150PF +-2.5% 630VDC POLYP | 25088 | |
| A32C10 | 0160-4571 | 8 | 3 | CAPACITOR-FXD .1UF +80-20% 50VDC CER | 04222 | SA105E104ZAA |
| A32C11 | 0140-0204 | 4 | 1 | CAPACITOR-FXD 47PF +-5% 500VDC MICA | 09023 | |
| A32C12 | 0160-0196 | 5 | 1 | CAPACITOR-FXD 24PF +-5% 300VDC MICA | 09023 | |
| A32C13 | 0160-2204 | 0 | | CAPACITOR-FXD 100PF +-5% 300VDC MICA | 00853 | D153F101J |
| A32C14 | 0140-0149 | 6 | 1 | CAPACITOR-FXD 470PF +-5% 300VDC MICA | 00853 | |
| A32C15 | 0150-0029 | 2 | 1 | CAPACITOR-FXD 1PF +-10% 500VDC TI DIOX | 95121 | TYPE QC |

See introduction to this section for ordering information
* Indicates one of several possible values installed

# Table 9-3. Replaceable Parts

| Reference Designation | HP Part Number | C D | Qty. | Description | Mfr. Code | Mfr. Part Number |
|---|---|---|---|---|---|---|
| A32C16 | 0160-4571 | 8 | | CAPACITOR-FXD .1UF +80-20% 50VDC CER | 04222 | SA105E104ZAA |
| A32C17 | 0160-4571 | 8 | | CAPACITOR-FXD .1UF +80-20% 50VDC CER | 04222 | SA105E104ZAA |
| A32C18 | 0160-6509 | 6 | | C-F .1UF --% 100V CERMLr | 28480 | RPE122-977Z5U104Z100V |
| A32C19 | 0160-6509 | 6 | | C-F .1UF --% 100V CERMLr | 28480 | RPE122-977Z5U104Z100V |
| A32C20 | 0160-6509 | 6 | | C-F .1UF --% 100V CERMLr | 28480 | RPE122-977Z5U104Z100V |
| A32C21 | 0180-1794 | 3 | 3 | CAPACITOR-FXD 22UF+-10% 35VDC TA | 13606 | 150D226X9035R2-DYS |
| A32C22 | 0180-1794 | 3 | | CAPACITOR-FXD 22UF+-10% 35VDC TA | 13606 | 150D226X9035R2-DYS |
| A32C23 | 0160-6509 | 6 | | C-F .1UF --% 100V CERMLr | 28480 | RPE122-977Z5U104Z100V |
| A32C24 | 0160-6509 | 6 | | C-F .1UF --% 100V CERMLr | 28480 | RPE122-977Z5U104Z100V |
| A32C25 | 0160-6509 | 6 | | C-F .1UF --% 100V CERMLr | 28480 | RPE122-977Z5U104Z100V |
| A32C26 | 0160-6509 | 6 | | C-F .1UF --% 100V CERMLr | 28480 | RPE122-977Z5U104Z100V |
| A32C27 | 0180-1794 | 3 | | CAPACITOR-FXD 22UF+-10% 35VDC TA | 13606 | 150D226X9035R2-DYS |
| A32C29 | 0160-6509 | 6 | | C-F .1UF --% 100V CERMLr | 28480 | RPE122-977Z5U104Z100V |
| A32C30 | 0180-1746 | 5 | 1 | CAPACITOR-FXD 15UF+-10% 20VDC TA | 13606 | 150D156X9020B2-DYS |
| A32C31 | 0180-0196 | 7 | 2 | CAPACITOR-FXD 56UF+-10% 15VDC TA | 13606 | 150D566X9015R2-DYS |
| A32C32 | 0180-0196 | 7 | | CAPACITOR-FXD 56UF+-10% 15VDC TA | 13606 | 150D566X9015R2-DYS |
| A32CR1 | 1901-0040 | 1 | 10 | DIODE-SWITCHING 30V 50MA 2NS DO-35 | 9N171 | |
| A32CR2 | 1901-0040 | 1 | | DIODE-SWITCHING 30V 50MA 2NS DO-35 | 9N171 | |
| A32CR3 | 1901-0040 | 1 | | DIODE-SWITCHING 30V 50MA 2NS DO-35 | 9N171 | |
| A32CR4 | 1901-0040 | 1 | | DIODE-SWITCHING 30V 50MA 2NS DO-35 | 9N171 | |
| A32CR5 | 1901-0040 | 1 | | DIODE-SWITCHING 30V 50MA 2NS DO-35 | 9N171 | |
| A32CR6 | 1901-0040 | 1 | | DIODE-SWITCHING 30V 50MA 2NS DO-35 | 9N171 | |
| A32CR7 | 1901-0535 | 9 | 4 | DIODE-SCHOTTKY SM SIG | 28480 | 1901-0535 |
| A32CR8 | 1901-0535 | 9 | | DIODE-SCHOTTKY SM SIG | 28480 | 1901-0535 |
| A32CR9 | 1901-0535 | 9 | | DIODE-SCHOTTKY SM SIG | 28480 | 1901-0535 |
| A32CR10 | 1901-0040 | 1 | | DIODE-SWITCHING 30V 50MA 2NS DO-35 | 9N171 | |
| A32CR11 | 1901-0535 | 9 | | DIODE-SCHOTTKY SM SIG | 28480 | 1901-0535 |
| A32CR12 | 1901-0040 | 1 | | DIODE-SWITCHING 30V 50MA 2NS DO-35 | 9N171 | |
| A32CR13 | 1902-3054 | 5 | 1 | DIODE-ZNR 3.65V 5% DO-35 PD=.4W | 04713 | |
| A32CR14 | 1901-0040 | 1 | | DIODE-SWITCHING 30V 50MA 2NS DO-35 | 9N171 | |
| A32CR15 | 1902-0777 | 3 | 1 | DIODE-ZNR 1N825 6.2V 5% DO-7 PD=.4W | 04713 | |
| A32CR16 | 1902-0049 | 2 | 1 | DIODE-ZNR 6.19V 5% DO-35 PD=.4W | 04713 | |
| A32CR17 | 1901-0040 | 1 | | DIODE-SWITCHING 30V 50MA 2NS DO-35 | 9N171 | |
| A32H1 | 03585-05232 | 8 | 1 | SHTF CVR-A32 ALSK | 28480 | 03585-05232 |
| A32H4 | 0361-0230 | 4 | 2 | RVT-STB OVHD .123D .19LG BRSTN | 12014 | R-3682 |
| A32H5 | 0361-0230 | 4 | | RVT-STB OVHD .123D .19LG BRSTN | 12014 | R-3682 |
| A32H6 | 0370-2583 | 3 | 1 | MOLD KNOB-THRD F 6-32 | 04533P01 | 3001-SD |
| A32H11 | 1400-0971 | 5 | 2 | BRACKET-RTANG .452-LG .312-WD STL NI-PL | 03669P01 | |
| A32H12 | 1400-0971 | 5 | | BRACKET-RTANG .452-LG .312-WD STL NI-PL | 03669P01 | |
| A32H15 | 2190-0124 | 4 | 3 | WASHER-LK INTL T NO. 10 .195-IN-ID | 98291 | 3002-26 |
| A32H16 | 2190-0124 | 4 | | WASHER-LK INTL T NO. 10 .195-IN-ID | 98291 | 3002-26 |
| A32H17 | 2190-0124 | 4 | | WASHER-LK INTL T NO. 10 .195-IN-ID | 98291 | 3002-26 |
| A32H18 | 2200-0101 | 0 | 2 | SCREW-MACH 4-40 .188-IN-LG PAN-HD-POZI | 83486 | |
| A32H19 | 2200-0101 | 0 | | SCREW-MACH 4-40 .188-IN-LG PAN-HD-POZI | 83486 | |
| A32H20 | 2950-0078 | 9 | 3 | NUT-HEX-DBL-CHAM 10-32-THD .067-IN-THK | 98291 | 33002-18-00-0-156 |
| A32H21 | 2950-0078 | 9 | | NUT-HEX-DBL-CHAM 10-32-THD .067-IN-THK | 98291 | 33002-18-00-0-156 |
| A32H22 | 2950-0078 | 9 | | NUT-HEX-DBL-CHAM 10-32-THD .067-IN-THK | 98291 | 33002-18-00-0-156 |
| A32J1 | 1250-2142 | 7 | 3 | CON-SMB | 74970 | 131-3701-341 |
| A32J2 | 1250-2142 | 7 | | CON-SMB | 74970 | 131-3701-341 |
| A32J3 | 1250-2142 | 7 | | CON-SMB | 74970 | 131-3701-341 |
| A32L1 | 9100-3560 | 6 | 3 | INDUCTOR RF-CH-MLD 5.6UH 5% .166DX.385LG24226 | 24226 | 15M561J |
| A32L2 | 9100-3560 | 6 | | INDUCTOR RF-CH-MLD 5.6UH 5% .166DX.385LG24226 | 24226 | 15M561J |
| A32L3 | 9100-3560 | 6 | | INDUCTOR RF-CH-MLD 5.6UH 5% .166DX.385LG24226 | 24226 | 15M561J |
| A32Q1 | 1853-0640 | 4 | 13 | XTR SML1PNP** | 27014 | 6692 |
| A32Q2 | 1853-0640 | 4 | | XTR SML1PNP** | 27014 | 6692 |
| A32Q3 | 1853-0640 | 4 | | XTR SML1PNP** | 27014 | 6692 |
| A32Q4 | 1854-0215 | 1 | 6 | TRANSISTOR NPN SI PD=350MW FT=300MHZ | 04713 | |
| A32Q5 | 1853-0640 | 4 | | XTR SML1PNP** | 27014 | 6692 |
| A32Q6 | 1855-0081 | 1 | 4 | TRANSISTOR J-FET N-CHAN D-MODE SI | 04713 | SPF819 |
| A32Q7 | 1855-0081 | 1 | | TRANSISTOR J-FET N-CHAN D-MODE SI | 04713 | SPF819 |
| A32Q8 | 1854-0215 | 1 | | TRANSISTOR NPN SI PD=350MW FT=300MHZ | 04713 | |
| A32Q9 | 1854-0215 | 1 | | TRANSISTOR NPN SI PD=350MW FT=300MHZ | 04713 | |
| A32Q11 | 1854-0215 | 1 | | TRANSISTOR NPN SI PD=350MW FT=300MHZ | 04713 | |
| A32Q12 | 1853-0640 | 4 | | XTR SML1PNP** | 27014 | 6692 |
| A32Q13 | 1853-0640 | 4 | | XTR SML1PNP** | 27014 | 6692 |

See introduction to this section for ordering information
* Indicates one of several possible values installed

# Table 9-3. Replaceable Parts

| Reference Designation | HP Part Number | C D | Qty. | Description | Mfr. Code | Mfr. Part Number |
|---|---|---|---|---|---|---|
| A32Q14 | 1854-0345 | 8 | 1 | TRANSISTOR NPN 2N5179 SI TO-72 PD=200MW | 04713 | |
| A32Q15 | 1853-0640 | 4 | | XTR SML1PNP** | 27014 | 6692 |
| A32Q16 | 1855-0689 | 5 | 1 | XTR SML1JFET | 04713 | |
| A32Q17 | 1853-0640 | 4 | | XTR SML1PNP** | 27014 | 6692 |
| A32Q18 | 1854-0404 | 0 | 2 | TRANSISTOR NPN SI TO-18 PD=360MW | 04713 | |
| A32Q19 | 1854-0404 | 0 | | TRANSISTOR NPN SI TO-18 PD=360MW | 04713 | |
| A32Q21 | 1855-0308 | 5 | 1 | TRANSISTOR-JFET DUAL N-CHAN D-MODE SI | 17856 | |
| A32Q22 | 1854-0296 | 8 | 2 | TRANSISTOR NPN SI TO-92 PD=350W | 04713 | |
| A32Q23 | 1854-0296 | 8 | | TRANSISTOR NPN SI TO-92 PD=350W | 04713 | |
| A32Q24 | 1853-0640 | 4 | | XTR SML1PNP** | 27014 | 6692 |
| A32Q25 | 1854-0215 | 1 | | TRANSISTOR NPN SI PD=350MW FT=300MHZ | 04713 | |
| A32Q26 | 1853-0640 | 4 | | XTR SML1PNP** | 27014 | 6692 |
| A32Q27 | 1854-0351 | 6 | 6 | TRANSISTOR NPN SI TO-18 PD=360MW | 04713 | |
| A32Q28 | 1854-0351 | 6 | | TRANSISTOR NPN SI TO-18 PD=360MW | 04713 | |
| A32Q29 | 1853-0640 | 4 | | XTR SML1PNP** | 27014 | 6692 |
| A32Q31 | 1854-0351 | 6 | | TRANSISTOR NPN SI TO-18 PD=360MW | 04713 | |
| A32Q32 | 1855-0081 | 1 | | TRANSISTOR J-FET N-CHAN D-MODE SI | 04713 | SPF819 |
| A32Q33 | 1854-0351 | 6 | | TRANSISTOR NPN SI TO-18 PD=360MW | 04713 | |
| A32Q34 | 1855-0081 | 1 | | TRANSISTOR J-FET N-CHAN D-MODE SI | 04713 | SPF819 |
| A32Q35 | 1854-0215 | 1 | | TRANSISTOR NPN SI PD=350MW FT=300MHZ | 04713 | |
| A32Q36 | 1854-0351 | 6 | | TRANSISTOR NPN SI TO-18 PD=360MW | 04713 | |
| A32Q37 | 1854-0351 | 6 | | TRANSISTOR NPN SI TO-18 PD=360MW | 04713 | |
| A32Q38 | 1853-0640 | 4 | | XTR SML1PNP** | 27014 | 6692 |
| A32Q39 | 1853-0640 | 4 | | XTR SML1PNP** | 27014 | 6692 |
| A32R1 | 0683-5605 | 9 | 1 | RESISTOR 56 5% .25W CF TC=0-400 | 77902 | R-25J |
| A32R3 | 0757-0421 | 4 | 5 | RESISTOR 825 1% .125W F TC=0+-100 | 19701 | SFR25H |
| A32R4 | 0757-0426 | 9 | 1 | RESISTOR 1.3K 1% .125W F TC=0+-100 | 19701 | SFR25H |
| A32R5 | 0757-0421 | 4 | | RESISTOR 825 1% .125W F TC=0+-100 | 19701 | SFR25H |
| A32R6 | 0698-4425 | 0 | 1 | RESISTOR 1.54K 1% .125W F TC=0+-100 | 91637 | CMF-55-1, T-1 |
| A32R7 | 0683-4705 | 8 | 14 | RESISTOR 47 5% .25W CF TC=0-400 | 77902 | R-25J |
| A32R8 | 0683-4705 | 8 | | RESISTOR 47 5% .25W CF TC=0-400 | 77902 | R-25J |
| A32R9 | 0683-3025 | 3 | 3 | RESISTOR 3K 5% .25W CF TC=0-400 | 77902 | R-25J |
| A32R11 | 0683-4715 | 0 | 2 | RESISTOR 470 5% .25W CF TC=0-400 | 77902 | R-25J |
| A32R12 | 0683-4715 | 0 | | RESISTOR 470 5% .25W CF TC=0-400 | 77902 | R-25J |
| A32R13 | 0683-4705 | 8 | | RESISTOR 47 5% .25W CF TC=0-400 | 77902 | R-25J |
| A32R14 | 0683-4705 | 8 | | RESISTOR 47 5% .25W CF TC=0-400 | 77902 | R-25J |
| A32R15 | 0757-0421 | 4 | | RESISTOR 825 1% .125W F TC=0+-100 | 19701 | SFR25H |
| A32R16 | 0757-0407 | 6 | 1 | RESISTOR 200 1% .125W F TC=0+-100 | 19701 | SFR25H |
| A32R17 | 0683-5125 | 8 | 3 | RESISTOR 5.1K 5% .25W CF TC=0-400 | 77902 | R-25J |
| A32R18 | 0683-2005 | 7 | 2 | RESISTOR 20 5% .25W CF TC=0-400 | 77902 | R-25J |
| A32R19 | 0683-1825 | 7 | 2 | RESISTOR 1.8K 5% .25W CF TC=0-400 | 77902 | R-25J |
| A32R20 | 0683-2025 | 1 | 8 | RESISTOR 2K 5% .25W CF TC=0-400 | 77902 | R-25J |
| A32R22 | 0683-1825 | 7 | | RESISTOR 1.8K 5% .25W CF TC=0-400 | 77902 | R-25J |
| A32R23 | 0683-3025 | 3 | | RESISTOR 3K 5% .25W CF TC=0-400 | 77902 | R-25J |
| A32R24 | 0757-0428 | 1 | 1 | RESISTOR 1.62K 1% .125W F TC=0+-100 | 19701 | SFR25H |
| A32R25 | 0757-0444 | 1 | 1 | RESISTOR 12.1K 1% .125W F TC=0+-100 | 19701 | SFR25H |
| A32R26 | 0757-0434 | 9 | 1 | RESISTOR 3.65K 1% .125W F TC=0+-100 | 19701 | SFR25H |
| A32R27 | 0683-5125 | 8 | | RESISTOR 5.1K 5% .25W CF TC=0-400 | 77902 | R-25J |
| A32R28 | 0683-5125 | 8 | | RESISTOR 5.1K 5% .25W CF TC=0-400 | 77902 | R-25J |
| A32R29 | 0698-3259 | 6 | 1 | RESISTOR 7.87K 1% .125W F TC=0+-100 | 19701 | SFR25H |
| A32R31 | 0757-0161 | 9 | 1 | RESISTOR 604 1% .125W F TC=0+-100 | 19701 | SFR25H |
| A32R32 | 0683-2025 | 1 | | RESISTOR 2K 5% .25W CF TC=0-400 | 77902 | R-25J |
| A32R33 | 0683-2025 | 1 | | RESISTOR 2K 5% .25W CF TC=0-400 | 77902 | R-25J |
| A32R34 | 0683-2025 | 1 | | RESISTOR 2K 5% .25W CF TC=0-400 | 77902 | R-25J |
| A32R35 | 0683-1025 | 9 | 9 | RESISTOR 1K 5% .25W CF TC=0-400 | 77902 | R-25J |
| A32R36 | 0683-1025 | 9 | | RESISTOR 1K 5% .25W CF TC=0-400 | 77902 | R-25J |
| A32R37 | 0683-1025 | 9 | | RESISTOR 1K 5% .25W CF TC=0-400 | 77902 | R-25J |
| A32R38 | 0683-3925 | 2 | 3 | RESISTOR 3.9K 5% .25W CF TC=0-400 | 77902 | R-25J |
| A32R39 | 0683-3925 | 2 | | RESISTOR 3.9K 5% .25W CF TC=0-400 | 77902 | R-25J |
| A32R41 | 0683-3925 | 2 | | RESISTOR 3.9K 5% .25W CF TC=0-400 | 77902 | R-25J |
| A32R42 | 0683-4705 | 8 | | RESISTOR 47 5% .25W CF TC=0-400 | 77902 | R-25J |
| A32R43 | 0757-0435 | 0 | 1 | RESISTOR 3.92K 1% .125W F TC=0+-100 | 19701 | SFR25H |
| A32R44 | 0683-4705 | 8 | | RESISTOR 47 5% .25W CF TC=0-400 | 77902 | R-25J |
| A32R45 | 0757-0439 | 4 | 2 | RESISTOR 6.81K 1% .125W F TC=0+-100 | 19701 | SFR25H |
| A32R46 | 0757-0442 | 9 | 3 | RESISTOR 10K 1% .125W F TC=0+-100 | 19701 | SFR25H |

See introduction to this section for ordering information
* Indicates one of several possible values installed

## Table 9-3. Replaceable Parts

| Reference Designation | HP Part Number | C D | Qty. | Description | Mfr. Code | Mfr. Part Number |
|---|---|---|---|---|---|---|
| A32R48 | 0683-4705 | 8 | | RESISTOR 47 5% .25W CF TC=0-400 | 77902 | R-25J |
| A32R49 | 2100-3054 | 6 | 1 | RESISTOR-TRMR 50K 10% C SIDE-ADJ 17-TRN | 73138 | 89PR50K |
| A32R50 | 0683-1025 | 9 | | RESISTOR 1K 5% .25W CF TC=0-400 | 77902 | R-25J |
| A32R51 | 0757-0442 | 9 | | RESISTOR 10K 1% .125W F TC=0+-100 | 19701 | SFR25H |
| A32R52 | 0683-5625 | 3 | 1 | RESISTOR 5.6K 5% .25W CF TC=0-400 | 77902 | R-25J |
| A32R53 | 0757-0442 | 9 | | RESISTOR 10K 1% .125W F TC=0+-100 | 19701 | SFR25H |
| A32R54 | 0757-0283 | 6 | 2 | RESISTOR 2K 1% .125W F TC=0+-100 | 19701 | SFR25H |
| A32R55 | 0757-0401 | 0 | 1 | RESISTOR 100 1% .125W F TC=0+-100 | 19701 | SFR25H |
| A32R56 | 2100-3154 | 7 | 1 | RESISTOR-TRMR 1K 10% C SIDE-ADJ 17-TRN | 73138 | 89PR1K |
| A32R57 | 0698-4374 | 8 | 1 | RESISTOR 29.4 1% .125W F TC=0+-100 | 91637 | CMF-55-1, T-1 |
| A32R58 | 0698-7332 | 4 | 1 | RESISTOR 1M 1% .125W F TC=0+-100 | 19701 | 5033R |
| A32R59 | 0683-1065 | 7 | 1 | RESISTOR 10M 5% .25W CC TC=-900/+1100 | 01121 | CB1065 |
| A32R61 | 0683-4705 | 8 | | RESISTOR 47 5% .25W CF TC=0-400 | 77902 | R-25J |
| A32R62 | 0683-2025 | 1 | | RESISTOR 2K 5% .25W CF TC=0-400 | 77902 | R-25J |
| A32R63 | 0683-2025 | 1 | | RESISTOR 2K 5% .25W CF TC=0-400 | 77902 | R-25J |
| A32R64 | 0683-2025 | 1 | | RESISTOR 2K 5% .25W CF TC=0-400 | 77902 | R-25J |
| A32R65 | 0683-4705 | 8 | | RESISTOR 47 5% .25W CF TC=0-400 | 77902 | R-25J |
| A32R66 | 0683-1535 | 6 | 2 | RESISTOR 15K 5% .25W CF TC=0-400 | 77902 | R-25J |
| A32R67 | 0698-3162 | 0 | 1 | RESISTOR 46.4K 1% .125W F TC=0+-100 | 19701 | SFR25H |
| A32R68 | 0757-0439 | 4 | | RESISTOR 6.81K 1% .125W F TC=0+-100 | 19701 | SFR25H |
| A32R69 | 0683-1535 | 6 | | RESISTOR 15K 5% .25W CF TC=0-400 | 77902 | R-25J |
| A32R71 | 0683-4705 | 8 | | RESISTOR 47 5% .25W CF TC=0-400 | 77902 | R-25J |
| A32R72 | 0757-0416 | 7 | 4 | RESISTOR 511 1% .125W F TC=0+-100 | 19701 | SFR25H |
| A32R73 | 0757-0440 | 7 | 1 | RESISTOR 7.5K 1% .125W F TC=0+-100 | 19701 | SFR25H |
| A32R74 | 0757-0416 | 7 | | RESISTOR 511 1% .125W F TC=0+-100 | 19701 | SFR25H |
| A32R75 | 0757-0416 | 7 | | RESISTOR 511 1% .125W F TC=0+-100 | 19701 | SFR25H |
| A32R76 | 0757-0416 | 7 | | RESISTOR 511 1% .125W F TC=0+-100 | 19701 | SFR25H |
| A32R77 | 0683-4705 | 8 | | RESISTOR 47 5% .25W CF TC=0-400 | 77902 | R-25J |
| A32R78 | 0683-4705 | 8 | | RESISTOR 47 5% .25W CF TC=0-400 | 77902 | R-25J |
| A32R79 | 0683-3025 | 3 | | RESISTOR 3K 5% .25W CF TC=0-400 | 77902 | R-25J |
| A32R81 | 0683-4705 | 8 | | RESISTOR 47 5% .25W CF TC=0-400 | 77902 | R-25J |
| A32R82 | 0683-4705 | 8 | | RESISTOR 47 5% .25W CF TC=0-400 | 77902 | R-25J |
| A32R83 | 0683-1035 | 1 | 1 | RESISTOR 10K 5% .25W CF TC=0-400 | 77902 | R-25J |
| A32R84 | 0683-1015 | 7 | 3 | RESISTOR 100 5% .25W CF TC=0-400 | 77902 | R-25J |
| A32R85 | 0683-2005 | 7 | | RESISTOR 20 5% .25W CF TC=0-400 | 77902 | R-25J |
| A32R86 | 0683-1015 | 7 | | RESISTOR 100 5% .25W CF TC=0-400 | 77902 | R-25J |
| A32R87 | 0683-5115 | 6 | 3 | RESISTOR 510 5% .25W CF TC=0-400 | 77902 | R-25J |
| A32R88 | 0683-1025 | 9 | | RESISTOR 1K 5% .25W CF TC=0-400 | 77902 | R-25J |
| A32R89 | 0683-5105 | 4 | 6 | RESISTOR 51 5% .25W CF TC=0-400 | 77902 | R-25J |
| A32R91 | 0757-0421 | 4 | | RESISTOR 825 1% .125W F TC=0+-100 | 19701 | SFR25H |
| A32R92 | 0683-2025 | 1 | | RESISTOR 2K 5% .25W CF TC=0-400 | 77902 | R-25J |
| A32R93 | 0683-5105 | 4 | | RESISTOR 51 5% .25W CF TC=0-400 | 77902 | R-25J |
| A32R94 | 0683-1025 | 9 | | RESISTOR 1K 5% .25W CF TC=0-400 | 77902 | R-25J |
| A32R95 | 0683-1835 | 9 | 1 | RESISTOR 18K 5% .25W CF TC=0-400 | 77902 | R-25J |
| A32R96 | 0683-1025 | 9 | | RESISTOR 1K 5% .25W CF TC=0-400 | 77902 | R-25J |
| A32R97 | 0683-5105 | 4 | | RESISTOR 51 5% .25W CF TC=0-400 | 77902 | R-25J |
| A32R98 | 0757-0283 | 6 | | RESISTOR 2K 1% .125W F TC=0+-100 | 19701 | SFR25H |
| A32R99 | 0683-5115 | 6 | | RESISTOR 510 5% .25W CF TC=0-400 | 77902 | R-25J |
| A32R101 | 0683-5105 | 4 | | RESISTOR 51 5% .25W CF TC=0-400 | 77902 | R-25J |
| A32R102 | 0757-0280 | 3 | 1 | RESISTOR 1K 1% .125W F TC=0+-100 | 19701 | SFR25H |
| A32R103 | 0757-0421 | 4 | | RESISTOR 825 1% .125W F TC=0+-100 | 19701 | SFR25H |
| A32R104 | 0683-5115 | 6 | | RESISTOR 510 5% .25W CF TC=0-400 | 77902 | R-25J |
| A32R105 | 0683-6825 | 7 | 1 | RESISTOR 6.8K 5% .25W CF TC=0-400 | 77902 | R-25J |
| A32R106 | 0683-1025 | 9 | | RESISTOR 1K 5% .25W CF TC=0-400 | 77902 | R-25J |
| A32R107 | 0683-5105 | 4 | | RESISTOR 51 5% .25W CF TC=0-400 | 77902 | R-25J |
| A32R108 | 0683-5105 | 4 | | RESISTOR 51 5% .25W CF TC=0-400 | 77902 | R-25J |
| A32R109 | 0757-0419 | 0 | 1 | RESISTOR 681 1% .125W F TC=0+-100 | 19701 | SFR25H |
| A32R111 | 0683-1015 | 7 | | RESISTOR 100 5% .25W CF TC=0-400 | 77902 | R-25J |
| A32R112 | 0683-1025 | 9 | | RESISTOR 1K 5% .25W CF TC=0-400 | 77902 | R-25J |
| A32TP1 | 1251-0600 | 0 | 4 | CONNECTOR-SGL CONT PIN 1.14-MM-BSC-SZ SQ27264 | 27264 | 16-06-0034 |
| A32TP2 | 1251-0600 | 0 | | CONNECTOR-SGL CONT PIN 1.14-MM-BSC-SZ SQ27264 | 27264 | 16-06-0034 |
| A32TP3 | 1251-0600 | 0 | | CONNECTOR-SGL CONT PIN 1.14-MM-BSC-SZ SQ27264 | 27264 | 16-06-0034 |
| A32TP4 | 1251-0600 | 0 | | CONNECTOR-SGL CONT PIN 1.14-MM-BSC-SZ SQ27264 | 27264 | 16-06-0034 |
| A32TP5 | 0360-0124 | 3 | 2 | CONNECTOR-SGL CONT PIN .04-IN-BSC-SZ RND97300 | 97300 | |
| A32TP6 | 0360-0124 | 3 | | CONNECTOR-SGL CONT PIN .04-IN-BSC-SZ RND97300 | 97300 | |

See introduction to this section for ordering information
* Indicates one of several possible values installed

# Table 9-3. Replaceable Parts

| Reference Designation | HP Part Number | C D | Qty. | Description | Mfr. Code | Mfr. Part Number |
|---|---|---|---|---|---|---|
| A32U1 | 1820-1196 | 8 | 1 | IC FF TTL LS D-TYPE POS-EDGE-TRIG COM | 01295 | |
| A32U2 | 1821-0001 | 4 | 1 | TRANSISTOR ARRAY 14-PIN PLSTC DIP | 04713 | |
| A32U3 | 1810-0294 | 4 | 1 | NETWORK-RESISTOR 16 PIN DIP; RES | 28480 | 1810-0294 |
| A32U4 | 1820-0817 | 8 | 1 | IC FF ECL D-M/S DUAL | 04713 | |
| A32U5 | 1826-0021 | 8 | 1 | IC OP AMP GP TO-99 PKG | 27014 | |
| | 7121-4611 | 2 | 1 | LABEL-INFORMATION .15-IN-WD .6-IN-LG | 28480 | L01003 |
| | 4330-0496 | 3 | 1 | INSULATOR-BEAD GLASS | 53101 | KG12 |
| **A33** | **03585-66533** | **0** | **1** | **DIVIDE-BY-N COUNTER PC BD ASSEMBLY** | **28480** | **03585-66533** |
| A33C1 | 0160-3847 | 9 | 4 | CAPACITOR-FXD .01UF +100-0% 50VDC CER | 04222 | SA105C103KAA |
| A33C2 | 0160-6515 | 4 | 1 | C-F 10PF --% 200V CERMLr | 28480 | RPE121-978C0G100D200V |
| A33C3 | 0160-4571 | 8 | 10 | CAPACITOR-FXD .1UF +80-20% 50VDC CER | 04222 | SA105E104ZAA |
| A33C4 | 0160-4571 | 8 | | CAPACITOR-FXD .1UF +80-20% 50VDC CER | 04222 | SA105E104ZAA |
| A33C6 | 0160-3847 | 9 | | CAPACITOR-FXD .01UF +100-0% 50VDC CER | 04222 | SA105C103KAA |
| A33C7 | 0160-3847 | 9 | | CAPACITOR-FXD .01UF +100-0% 50VDC CER | 04222 | SA105C103KAA |
| A33C8 | 0160-4571 | 8 | | CAPACITOR-FXD .1UF +80-20% 50VDC CER | 04222 | SA105E104ZAA |
| A33C9 | 0160-4571 | 8 | | CAPACITOR-FXD .1UF +80-20% 50VDC CER | 04222 | SA105E104ZAA |
| A33C10 | 0160-4571 | 8 | | CAPACITOR-FXD .1UF +80-20% 50VDC CER | 04222 | SA105E104ZAA |
| A33C11 | 0160-4571 | 8 | | CAPACITOR-FXD .1UF +80-20% 50VDC CER | 04222 | SA105E104ZAA |
| A33C12 | 0140-0210 | 2 | 1 | CAPACITOR-FXD 270PF +-5% 300VDC MICA | 00853 | |
| A33C13 | 0160-4571 | 8 | | CAPACITOR-FXD .1UF +80-20% 50VDC CER | 04222 | SA105E104ZAA |
| A33C14 | 0160-4571 | 8 | | CAPACITOR-FXD .1UF +80-20% 50VDC CER | 04222 | SA105E104ZAA |
| A33C15 | 0180-0194 | 5 | 1 | CAPACITOR-FXD 150UF+-10% 15VDC TA | 13606 | 150D157X9015S2-DYS |
| A33C16 | 0160-4571 | 8 | | CAPACITOR-FXD .1UF +80-20% 50VDC CER | 04222 | SA105E104ZAA |
| A33C21 | 0160-6513 | 2 | 1 | C-F 68PF 5% 200V CERMLr | 28480 | RPE121-978C0G680J200V |
| A33C22 | 0160-4571 | 8 | | CAPACITOR-FXD .1UF +80-20% 50VDC CER | 04222 | SA105E104ZAA |
| A33C23 | 0160-3847 | 9 | | CAPACITOR-FXD .01UF +100-0% 50VDC CER | 04222 | SA105C103KAA |
| A33CR1 | 1902-3030 | 7 | 1 | DIODE-ZNR 3.01V 5% DO-7 PD=.4W TC=-.067%04713 | 04713 | |
| A33CR2 | 1902-3105 | 7 | 2 | DIODE-ZNR 5.62V 2% DO-35 PD=.4W | 04713 | |
| A33CR3 | 1902-3105 | 7 | | DIODE-ZNR 5.62V 2% DO-35 PD=.4W | 04713 | |
| A33H1 | 03585-05233 | 9 | 1 | SHTF CVR-A33 ALSK | 28480 | 03585-05233 |
| A33H2 | 0370-2583 | 3 | 1 | MOLD KNOB-THRD F 6-32 | 04533P01 | 3001-SD |
| A33H5 | 2190-0124 | 4 | 2 | WASHER-LK INTL T NO. 10 .195-IN-ID | 98291 | 3002-26 |
| A33H6 | 2190-0124 | 4 | | WASHER-LK INTL T NO. 10 .195-IN-ID | 98291 | 3002-26 |
| A33H7 | 2200-0101 | 0 | 2 | SCREW-MACH 4-40 .188-IN-LG PAN-HD-POZI | 83486 | |
| A33H8 | 2200-0101 | 0 | | SCREW-MACH 4-40 .188-IN-LG PAN-HD-POZI | 83486 | |
| A33H9 | 2950-0078 | 9 | 2 | NUT-HEX-DBL-CHAM 10-32-THD .067-IN-THK | 98291 | 33002-18-00-0-156 |
| A33H10 | 2950-0078 | 9 | | NUT-HEX-DBL-CHAM 10-32-THD .067-IN-THK | 98291 | 33002-18-00-0-156 |
| A33H12 | 1200-0185 | 9 | 2 | INSULATOR-XSTR NYLON | 13103 | 7717-86N RED |
| A33H13 | 1200-0185 | 9 | | INSULATOR-XSTR NYLON | 13103 | 7717-86N RED |
| A33H14 | 1205-0011 | 0 | 2 | HEAT SINK TO-5/TO-39-CS | 98978 | TXBF-032-025B |
| A33H15 | 1205-0011 | 0 | | HEAT SINK TO-5/TO-39-CS | 98978 | TXBF-032-025B |
| A33J1 | 1250-2142 | 7 | 2 | CON-SMB | 74970 | 131-3701-341 |
| A33J2 | 1250-2142 | 7 | | CON-SMB | 74970 | 131-3701-341 |
| A33L3 | 9140-0748 | 0 | 2 | INDUCTOR 250UH 25% .25DX.5LG Q=3 | 24226 | CA-253-5 |
| A33L4 | 9140-0748 | 0 | | INDUCTOR 250UH 25% .25DX.5LG Q=3 | 24226 | CA-253-5 |
| A33Q1 | 1853-0640 | 4 | 4 | XTR SML1PNP** | 27014 | 6692 |
| A33Q2 | 1853-0640 | 4 | | XTR SML1PNP** | 27014 | 6692 |
| A33Q3 | 1853-0640 | 4 | | XTR SML1PNP** | 27014 | 6692 |
| A33Q4 | 1853-0640 | 4 | | XTR SML1PNP** | 27014 | 6692 |
| A33Q5 | 1854-0351 | 6 | 1 | TRANSISTOR NPN SI TO-18 PD=360MW | 04713 | |
| A33Q6 | 1854-0039 | 7 | 2 | TRANSISTOR NPN 2N3053S SI TO-39 PD=1W | 04713 | |
| A33Q7 | 1854-0039 | 7 | | TRANSISTOR NPN 2N3053S SI TO-39 PD=1W | 04713 | |
| A33R1 | 0683-5125 | 8 | 1 | RESISTOR 5.1K 5% .25W CF TC=0-400 | 77902 | R-25J |
| A33R2 | 0683-2715 | 6 | 2 | RESISTOR 270 5% .25W CF TC=0-400 | 77902 | R-25J |
| A33R3 | 0683-4315 | 6 | 2 | RESISTOR 430 5% .25W CF TC=0-400 | 77902 | R-25J |
| A33R4 | 0683-1025 | 9 | 11 | RESISTOR 1K 5% .25W CF TC=0-400 | 77902 | R-25J |
| A33R5 | 0683-1025 | 9 | | RESISTOR 1K 5% .25W CF TC=0-400 | 77902 | R-25J |
| A33R6 | 0683-1025 | 9 | | RESISTOR 1K 5% .25W CF TC=0-400 | 77902 | R-25J |
| A33R7 | 0683-1025 | 9 | | RESISTOR 1K 5% .25W CF TC=0-400 | 77902 | R-25J |
| A33R8 | 0683-4705 | 8 | 6 | RESISTOR 47 5% .25W CF TC=0-400 | 77902 | R-25J |
| A33R9 | 0683-5105 | 4 | 1 | RESISTOR 51 5% .25W CF TC=0-400 | 77902 | R-25J |
| A33R10 | 0683-4705 | 8 | | RESISTOR 47 5% .25W CF TC=0-400 | 77902 | R-25J |
| A33R11 | 0683-1515 | 2 | 1 | RESISTOR 150 5% .25W CF TC=0-400 | 77902 | R-25J |

See introduction to this section for ordering information
* Indicates one of several possible values installed

# Table 9-3. Replaceable Parts

| Reference Designation | HP Part Number | C D | Qty. | Description | Mfr. Code | Mfr. Part Number |
|---|---|---|---|---|---|---|
| A33R12 | 0683-2025 | 1 | 14 | RESISTOR 2K 5% .25W CF TC=0-400 | 77902 | R-25J |
| A33R13 | 0683-2025 | 1 | | RESISTOR 2K 5% .25W CF TC=0-400 | 77902 | R-25J |
| A33R14 | 0683-2025 | 1 | | RESISTOR 2K 5% .25W CF TC=0-400 | 77902 | R-25J |
| A33R15 | 0683-2025 | 1 | | RESISTOR 2K 5% .25W CF TC=0-400 | 77902 | R-25J |
| A33R20 | 0683-1035 | 1 | 1 | RESISTOR 10K 5% .25W CF TC=0-400 | 77902 | R-25J |
| A33R21 | 0698-4436 | 3 | 1 | RESISTOR 2.8K 1% .125W F TC=0+-100 | 91637 | CMF-55-1, T-1 |
| A33R22 | 0683-2025 | 1 | | RESISTOR 2K 5% .25W CF TC=0-400 | 77902 | R-25J |
| A33R23 | 0683-2025 | 1 | | RESISTOR 2K 5% .25W CF TC=0-400 | 77902 | R-25J |
| A33R24 | 0683-2025 | 1 | | RESISTOR 2K 5% .25W CF TC=0-400 | 77902 | R-25J |
| A33R25 | 0683-2025 | 1 | | RESISTOR 2K 5% .25W CF TC=0-400 | 77902 | R-25J |
| A33R26 | 0683-2025 | 1 | | RESISTOR 2K 5% .25W CF TC=0-400 | 77902 | R-25J |
| A33R27 | 0683-2025 | 1 | | RESISTOR 2K 5% .25W CF TC=0-400 | 77902 | R-25J |
| A33R30 | 0683-2025 | 1 | | RESISTOR 2K 5% .25W CF TC=0-400 | 77902 | R-25J |
| A33R31 | 0683-2025 | 1 | | RESISTOR 2K 5% .25W CF TC=0-400 | 77902 | R-25J |
| A33R32 | 0683-2025 | 1 | | RESISTOR 2K 5% .25W CF TC=0-400 | 77902 | R-25J |
| A33R33 | 0683-2015 | 9 | 1 | RESISTOR 200 5% .25W CF TC=0-400 | 77902 | R-25J |
| A33R34 | 0683-1025 | 9 | | RESISTOR 1K 5% .25W CF TC=0-400 | 77902 | R-25J |
| A33R36 | 0683-1025 | 9 | | RESISTOR 1K 5% .25W CF TC=0-400 | 77902 | R-25J |
| A33R37 | 0683-1525 | 4 | 1 | RESISTOR 1.5K 5% .25W CF TC=0-400 | 77902 | R-25J |
| A33R38 | 0683-3615 | 7 | 2 | RESISTOR 360 5% .25W CF TC=0-400 | 77902 | R-25J |
| A33R39 | 0683-3615 | 7 | | RESISTOR 360 5% .25W CF TC=0-400 | 77902 | R-25J |
| A33R40 | 0683-5625 | 3 | 1 | RESISTOR 5.6K 5% .25W CF TC=0-400 | 77902 | R-25J |
| A33R41 | 0683-1025 | 9 | | RESISTOR 1K 5% .25W CF TC=0-400 | 77902 | R-25J |
| A33R42 | 0683-1025 | 9 | | RESISTOR 1K 5% .25W CF TC=0-400 | 77902 | R-25J |
| A33R45 | 0683-4315 | 6 | | RESISTOR 430 5% .25W CF TC=0-400 | 77902 | R-25J |
| A33R46 | 0683-2715 | 6 | | RESISTOR 270 5% .25W CF TC=0-400 | 77902 | R-25J |
| A33R47 | 0683-5115 | 6 | 4 | RESISTOR 510 5% .25W CF TC=0-400 | 77902 | R-25J |
| A33R48 | 0683-4705 | 8 | | RESISTOR 47 5% .25W CF TC=0-400 | 77902 | R-25J |
| A33R50 | 0683-1025 | 9 | | RESISTOR 1K 5% .25W CF TC=0-400 | 77902 | R-25J |
| A33R51 | 0683-1025 | 9 | | RESISTOR 1K 5% .25W CF TC=0-400 | 77902 | R-25J |
| A33R52 | 0683-1025 | 9 | | RESISTOR 1K 5% .25W CF TC=0-400 | 77902 | R-25J |
| A33R53 | 0683-4705 | 8 | | RESISTOR 47 5% .25W CF TC=0-400 | 77902 | R-25J |
| A33R54 | 0683-4705 | 8 | | RESISTOR 47 5% .25W CF TC=0-400 | 77902 | R-25J |
| A33R55 | 0683-5115 | 6 | | RESISTOR 510 5% .25W CF TC=0-400 | 77902 | R-25J |
| A33R56 | 0683-5115 | 6 | | RESISTOR 510 5% .25W CF TC=0-400 | 77902 | R-25J |
| A33R57 | 0683-2415 | 3 | 1 | RESISTOR 240 5% .25W CF TC=0-400 | 77902 | R-25J |
| A33R58 | 0683-1015 | 7 | 1 | RESISTOR 100 5% .25W CF TC=0-400 | 77902 | R-25J |
| A33R59 | 0683-4705 | 8 | | RESISTOR 47 5% .25W CF TC=0-400 | 77902 | R-25J |
| A33R65 | 0683-5115 | 6 | | RESISTOR 510 5% .25W CF TC=0-400 | 77902 | R-25J |
| A33R67 | 0764-0033 | 9 | 1 | RESISTOR 33 5% 2W MO TC=0+-200 | 28480 | GS-3 |
| A33R68 | 0683-6205 | 7 | 1 | RESISTOR 62 5% .25W CF TC=0-400 | 77902 | R-25J |
| A33R69 | 0683-2025 | 1 | | RESISTOR 2K 5% .25W CF TC=0-400 | 77902 | R-25J |
| A33R70 | 0698-3615 | 8 | 1 | RESISTOR 47 5% 2W MO TC=0+-200 | 28480 | GS-3 |
| A33R71 | 0698-3180 | 2 | 1 | RESISTOR 68 2% 2W MO TC=0+-200 | 28480 | GS-3 |
| A33U1 | 1820-0810 | 1 | 2 | IC RCVR ECL LINE RCVR TPL 2-INP | 04713 | |
| A33U2 | 1820-0693 | 8 | 1 | IC FF TTL S D-TYPE POS-EDGE-TRIG | 01295 | |
| A33U3 | 1820-0817 | 8 | 2 | IC FF ECL D-M/S DUAL | 04713 | |
| A33U4 | 1820-0817 | 8 | | IC FF ECL D-M/S DUAL | 04713 | |
| A33U5 | 1820-0820 | 3 | 1 | IC FF ECL J-BAR K-BAR COM CLOCK DUAL | 04713 | |
| A33U6 | 1820-0629 | 0 | 4 | IC FF TTL S J-K NEG-EDGE-TRIG | 01295 | |
| A33U7 | 1820-0629 | 0 | | IC FF TTL S J-K NEG-EDGE-TRIG | 01295 | |
| A33U8 | 1820-1322 | 2 | 1 | IC GATE TTL S NOR QUAD 2-INP | 01295 | |
| A33U9 | 1820-0681 | 4 | 4 | IC GATE TTL S NAND QUAD 2-INP | 01295 | |
| A33U10 | 1820-0681 | 4 | | IC GATE TTL S NAND QUAD 2-INP | 01295 | |
| A33U11 | 1820-0681 | 4 | | IC GATE TTL S NAND QUAD 2-INP | 01295 | |
| A33U12 | 1820-0629 | 0 | | IC FF TTL S J-K NEG-EDGE-TRIG | 01295 | |
| A33U13 | 1820-0629 | 0 | | IC FF TTL S J-K NEG-EDGE-TRIG | 01295 | |
| A33U14 | 1820-1279 | 8 | 2 | IC CNTR TTL LS DECD UP/DOWN SYNCHRO | 01295 | |
| A33U15 | 1820-1279 | 8 | | IC CNTR TTL LS DECD UP/DOWN SYNCHRO | 01295 | |
| A33U16 | 1820-1196 | 8 | 2 | IC FF TTL LS D-TYPE POS-EDGE-TRIG COM | 01295 | |
| A33U17 | 1820-1196 | 8 | | IC FF TTL LS D-TYPE POS-EDGE-TRIG COM | 01295 | |
| A33U18 | 1820-1144 | 6 | 1 | IC GATE TTL LS NOR QUAD 2-INP | 01295 | |
| A33U19 | 1820-2004 | 9 | 1 | IC MISC NMOS | 28480 | 1820-2004 |
| A33U20 | 1820-0683 | 6 | 1 | IC INV TTL S HEX 1-INP | 01295 | |
| A33U21 | 1820-0810 | 1 | | IC RCVR ECL LINE RCVR TPL 2-INP | 04713 | |

See introduction to this section for ordering information
* Indicates one of several possible values installed

# Table 9-3. Replaceable Parts

| Reference Designation | HP Part Number | C D | Qty. | Description | Mfr. Code | Mfr. Part Number |
|---|---|---|---|---|---|---|
| A33U22 | 1820-0681 | 4 | | IC GATE TTL S NAND QUAD 2-INP | 01295 | |
| | 7121-4611 | 2 | 1 | LABEL-INFORMATION .15-IN-WD .6-IN-LG | 28480 | L01003 |
| **A34** | **03585-66534** | **1** | **1** | **INTERFACE % TRIGGER PC BD ASSEMBLY** | **28480** | **03585-66534** |
| A34C1 | 0160-3847 | 9 | 5 | CAPACITOR-FXD .01UF +100-0% 50VDC CER | 04222 | SA105C103KAA |
| A34C2 | 0160-3847 | 9 | | CAPACITOR-FXD .01UF +100-0% 50VDC CER | 04222 | SA105C103KAA |
| A34C3 | 0160-3847 | 9 | | CAPACITOR-FXD .01UF +100-0% 50VDC CER | 04222 | SA105C103KAA |
| A34C5 | 0180-0291 | 3 | 2 | CAPACITOR-FXD 1UF+-10% 35VDC TA | 13606 | 150D105X9035A2-DYS |
| A34C6 | 0180-1794 | 3 | 2 | CAPACITOR-FXD 22UF+-10% 35VDC TA | 13606 | 150D226X9035R2-DYS |
| A34C7 | 0160-3847 | 9 | | CAPACITOR-FXD .01UF +100-0% 50VDC CER | 04222 | SA105C103KAA |
| A34C8 | 0140-0199 | 6 | 1 | CAPACITOR-FXD 240PF +-5% 300VDC MICA | 09023 | |
| A34C9 | 0160-2257 | 3 | 1 | CAPACITOR-FXD 10PF +-5% 500VDC CER 0+-6052763 | 52763 | |
| A34C10 | 0180-1746 | 5 | 3 | CAPACITOR-FXD 15UF+-10% 20VDC TA | 13606 | 150D156X9020B2-DYS |
| A34C11 | 0180-0291 | 3 | | CAPACITOR-FXD 1UF+-10% 35VDC TA | 13606 | 150D105X9035A2-DYS |
| A34C12 | 0180-1794 | 3 | | CAPACITOR-FXD 22UF+-10% 35VDC TA | 13606 | 150D226X9035R2-DYS |
| A34C13 | 0160-3847 | 9 | | CAPACITOR-FXD .01UF +100-0% 50VDC CER | 04222 | SA105C103KAA |
| A34C14 | 0180-1746 | 5 | | CAPACITOR-FXD 15UF+-10% 20VDC TA | 13606 | 150D156X9020B2-DYS |
| A34C15 | 0160-2199 | 2 | 1 | CAPACITOR-FXD 30PF +-5% 300VDC MICA | 00853 | |
| A34C16 | 0180-0197 | 8 | 1 | CAPACITOR-FXD 2.2UF+-10% 20VDC TA | 13606 | 150D225X9020A2-DYS |
| A34C17 | 0180-0228 | 6 | 1 | CAPACITOR-FXD 22UF+-10% 15VDC TA | 13606 | 150D226X9015B2-DYS |
| A34C18 | 0160-0298 | 8 | 1 | CAPACITOR-FXD 1500PF +-10% 200VDC POLYE | 15766 | HEW-238M |
| A34C20 | 0180-1746 | 5 | | CAPACITOR-FXD 15UF+-10% 20VDC TA | 13606 | 150D156X9020B2-DYS |
| A34C30 | 0160-6509 | 6 | 9 | C-F .1UF --% 100V CERMLr | 28480 | RPE122-977Z5U104Z100V |
| A34C31 | 0160-6509 | 6 | | C-F .1UF --% 100V CERMLr | 28480 | RPE122-977Z5U104Z100V |
| A34C32 | 0160-6509 | 6 | | C-F .1UF --% 100V CERMLr | 28480 | RPE122-977Z5U104Z100V |
| A34C33 | 0160-6509 | 6 | | C-F .1UF --% 100V CERMLr | 28480 | RPE122-977Z5U104Z100V |
| A34C34 | 0160-6509 | 6 | | C-F .1UF --% 100V CERMLr | 28480 | RPE122-977Z5U104Z100V |
| A34C35 | 0160-6509 | 6 | | C-F .1UF --% 100V CERMLr | 28480 | RPE122-977Z5U104Z100V |
| A34C36 | 0160-6509 | 6 | | C-F .1UF --% 100V CERMLr | 28480 | RPE122-977Z5U104Z100V |
| A34C37 | 0160-6509 | 6 | | C-F .1UF --% 100V CERMLr | 28480 | RPE122-977Z5U104Z100V |
| A34C38 | 0160-6509 | 6 | | C-F .1UF --% 100V CERMLr | 28480 | RPE122-977Z5U104Z100V |
| A34CR1 | 1901-0040 | 1 | 6 | DIODE-SWITCHING 30V 50MA 2NS DO-35 | 9N171 | |
| A34CR2 | 1901-0040 | 1 | | DIODE-SWITCHING 30V 50MA 2NS DO-35 | 9N171 | |
| A34CR3 | 1901-0040 | 1 | | DIODE-SWITCHING 30V 50MA 2NS DO-35 | 9N171 | |
| A34CR4 | 1901-0040 | 1 | | DIODE-SWITCHING 30V 50MA 2NS DO-35 | 9N171 | |
| A34CR7 | 1901-0040 | 1 | | DIODE-SWITCHING 30V 50MA 2NS DO-35 | 9N171 | |
| A34CR8 | 1901-0040 | 1 | | DIODE-SWITCHING 30V 50MA 2NS DO-35 | 9N171 | |
| A34CR9 | 1902-0064 | 1 | 1 | DIODE-ZNR 7.5V 5% DO-35 PD=.4W TC=+.05% | 04713 | |
| A34CR10 | 1902-0777 | 3 | 2 | DIODE-ZNR 1N825 6.2V 5% DO-7 PD=.4W | 04713 | |
| A34CR11 | 1902-0777 | 3 | | DIODE-ZNR 1N825 6.2V 5% DO-7 PD=.4W | 04713 | |
| A34DS1 | 1990-1123 | 0 | 4 | OPT LED LMP R AP LMP1301 TT1H | 28480 | 1990-1123 |
| A34DS2 | 1990-1123 | 0 | | OPT LED LMP R AP LMP1301 TT1H | 28480 | 1990-1123 |
| A34DS3 | 1990-1123 | 0 | | OPT LED LMP R AP LMP1301 TT1H | 28480 | 1990-1123 |
| A34DS4 | 1990-1123 | 0 | | OPT LED LMP R AP LMP1301 TT1H | 28480 | 1990-1123 |
| A34H1 | 0340-0580 | 3 | 2 | INSULATOR-XSTR THRM-CNDCT | 55285 | 7403-09FR-02 |
| A34H2 | 0340-0580 | 3 | | INSULATOR-XSTR THRM-CNDCT | 55285 | 7403-09FR-02 |
| A34H3 | 0590-1054 | 7 | 6 | THREADED INSERT-NUT 6-32 .065-IN-LG SST | 46384 | KFS2-632 |
| A34H4 | 0590-1054 | 7 | | THREADED INSERT-NUT 6-32 .065-IN-LG SST | 46384 | KFS2-632 |
| A34H5 | 0590-1054 | 7 | | THREADED INSERT-NUT 6-32 .065-IN-LG SST | 46384 | KFS2-632 |
| A34H6 | 0590-1054 | 7 | | THREADED INSERT-NUT 6-32 .065-IN-LG SST | 46384 | KFS2-632 |
| A34H7 | 0590-1054 | 7 | | THREADED INSERT-NUT 6-32 .065-IN-LG SST | 46384 | KFS2-632 |
| A34H8 | 0590-1054 | 7 | | THREADED INSERT-NUT 6-32 .065-IN-LG SST | 46384 | KFS2-632 |
| A34H17 | 2360-0115 | 4 | 6 | SCREW-MACH 6-32 .312-IN-LG PAN-HD-POZI | 83486 | |
| A34H18 | 2360-0115 | 4 | | SCREW-MACH 6-32 .312-IN-LG PAN-HD-POZI | 83486 | |
| A34H19 | 2360-0115 | 4 | | SCREW-MACH 6-32 .312-IN-LG PAN-HD-POZI | 83486 | |
| A34H20 | 2360-0115 | 4 | | SCREW-MACH 6-32 .312-IN-LG PAN-HD-POZI | 83486 | |
| A34H21 | 2360-0115 | 4 | | SCREW-MACH 6-32 .312-IN-LG PAN-HD-POZI | 83486 | |
| A34H22 | 2360-0115 | 4 | | SCREW-MACH 6-32 .312-IN-LG PAN-HD-POZI | 83486 | |
| A34H23 | 2360-0117 | 6 | 4 | SCREW-MACH 6-32 .375-IN-LG PAN-HD-POZI | 83486 | |
| A34H24 | 2360-0117 | 6 | | SCREW-MACH 6-32 .375-IN-LG PAN-HD-POZI | 83486 | |
| A34H25 | 2360-0117 | 6 | | SCREW-MACH 6-32 .375-IN-LG PAN-HD-POZI | 83486 | |
| A34H26 | 2360-0117 | 6 | | SCREW-MACH 6-32 .375-IN-LG PAN-HD-POZI | 83486 | |
| A34J2 | 1250-1810 | 4 | 2 | CONNECTOR-RF SMB M PC 50-OHM | 98291 | 51-353-0049 |
| A34J3 | 1250-1810 | 4 | | CONNECTOR-RF SMB M PC 50-OHM | 98291 | 51-353-0049 |

See introduction to this section for ordering information
* Indicates one of several possible values installed

# Table 9-3. Replaceable Parts

| Reference Designation | HP Part Number | C D | Qty. | Description | Mfr. Code | Mfr. Part Number |
|---|---|---|---|---|---|---|
| A34L1 | 9140-0748 | 0 | 1 | INDUCTOR 250UH 25% .25DX.5LG Q=3 | 24226 | CA-253-5 |
| A34MP1 | 03585-01104 | 5 | 1 | SHTF SINK-34 HEAT AL | 28480 | 03585-01104 |
| A34Q1 | 1854-0351 | 6 | 1 | TRANSISTOR NPN SI TO-18 PD=360MW | 04713 | |
| A34Q2 | 1854-0063 | 7 | 2 | TRANSISTOR NPN 2N3055 SI TO-3 PD=115W | 04713 | |
| A34Q3 | 1853-0010 | 2 | 1 | TRANSISTOR PNP SI TO-18 PD=360MW | 04713 | |
| A34Q4 | 1200-0185 | 9 | 1 | INSULATOR-XSTR NYLON | 13103 | 7717-86N RED |
| A34Q4 | 1854-0053 | 5 | 1 | TRANSISTOR NPN 2N2218 SI TO-5 PD=800MW | 04713 | |
| A34Q5 | 1854-0063 | 7 | | TRANSISTOR NPN 2N3055 SI TO-3 PD=115W | 04713 | |
| A34R5 | 0760-0009 | 1 | 3 | RESISTOR 100K 2% 1W MO TC=0+-200 | 28480 | RG32 |
| A34R6 | 0760-0009 | 1 | | RESISTOR 100K 2% 1W MO TC=0+-200 | 28480 | RG32 |
| A34R7 | 0683-1815 | 5 | 4 | RESISTOR 180 5% .25W CF TC=0-400 | 77902 | R-25J |
| A34R8 | 0683-1815 | 5 | | RESISTOR 180 5% .25W CF TC=0-400 | 77902 | R-25J |
| A34R9 | 0683-1815 | 5 | | RESISTOR 180 5% .25W CF TC=0-400 | 77902 | R-25J |
| A34R10 | 0683-1815 | 5 | | RESISTOR 180 5% .25W CF TC=0-400 | 77902 | R-25J |
| A34R15 | 0683-1835 | 9 | 1 | RESISTOR 18K 5% .25W CF TC=0-400 | 77902 | R-25J |
| A34R16 | 0683-3315 | 4 | 1 | RESISTOR 330 5% .25W CF TC=0-400 | 77902 | R-25J |
| A34R17 | 0683-1515 | 2 | 1 | RESISTOR 150 5% .25W CF TC=0-400 | 77902 | R-25J |
| A34R18 | 0683-0275 | 9 | 1 | RESISTOR 2.7 5% .25W CF TC=0-400 | 77902 | R-25J |
| A34R19 | 0813-0029 | 8 | 1 | RESISTOR 1 3% 3W PW TC=0+-50 | 91637 | CW-2B-39 |
| A34R20 | 0683-3635 | 1 | 1 | RESISTOR 36K 5% .25W CF TC=0-400 | 77902 | R-25J |
| A34R21 | 0698-3498 | 5 | 1 | RESISTOR 8.66K 1% .125W F TC=0+-100 | 19701 | SFR25H |
| A34R22 | 0698-3512 | 4 | 1 | RESISTOR 1.18K 1% .125W F TC=0+-100 | 19701 | SFR25H |
| A34R23 | 0683-3625 | 9 | 1 | RESISTOR 3.6K 5% .25W CF TC=0-400 | 77902 | R-25J |
| A34R24 | 0757-0290 | 5 | 1 | RESISTOR 6.19K 1% .125W F TC=0+-100 | 19701 | SFR25H |
| A34R25 | 0757-0426 | 9 | 1 | RESISTOR 1.3K 1% .125W F TC=0+-100 | 19701 | SFR25H |
| A34R26 | 0683-1025 | 9 | 3 | RESISTOR 1K 5% .25W CF TC=0-400 | 77902 | R-25J |
| A34R27 | 0683-1025 | 9 | | RESISTOR 1K 5% .25W CF TC=0-400 | 77902 | R-25J |
| A34R28 | 0683-1015 | 7 | 1 | RESISTOR 100 5% .25W CF TC=0-400 | 77902 | R-25J |
| A34R29 | 0683-1025 | 9 | | RESISTOR 1K 5% .25W CF TC=0-400 | 77902 | R-25J |
| A34R32 | 2100-3273 | 1 | 1 | RESISTOR-TRMR 2K 10% C SIDE-ADJ 1-TRN | 32997 | 3386X-Y46-202 |
| A34R33 | 0683-1035 | 1 | 4 | RESISTOR 10K 5% .25W CF TC=0-400 | 77902 | R-25J |
| A34R50 | 0683-2015 | 9 | 9 | RESISTOR 200 5% .25W CF TC=0-400 | 77902 | R-25J |
| A34R51 | 0683-2015 | 9 | | RESISTOR 200 5% .25W CF TC=0-400 | 77902 | R-25J |
| A34R52 | 0683-2015 | 9 | | RESISTOR 200 5% .25W CF TC=0-400 | 77902 | R-25J |
| A34R53 | 0683-2015 | 9 | | RESISTOR 200 5% .25W CF TC=0-400 | 77902 | R-25J |
| A34R54 | 0683-2015 | 9 | | RESISTOR 200 5% .25W CF TC=0-400 | 77902 | R-25J |
| A34R55 | 0683-2015 | 9 | | RESISTOR 200 5% .25W CF TC=0-400 | 77902 | R-25J |
| A34R56 | 0683-2015 | 9 | | RESISTOR 200 5% .25W CF TC=0-400 | 77902 | R-25J |
| A34R57 | 0683-2015 | 9 | | RESISTOR 200 5% .25W CF TC=0-400 | 77902 | R-25J |
| A34R58 | 0683-2015 | 9 | | RESISTOR 200 5% .25W CF TC=0-400 | 77902 | R-25J |
| A34R60 | 0683-2735 | 0 | 1 | RESISTOR 27K 5% .25W CF TC=0-400 | 77902 | R-25J |
| A34R61 | 0683-1035 | 1 | | RESISTOR 10K 5% .25W CF TC=0-400 | 77902 | R-25J |
| A34R62 | 0683-1035 | 1 | | RESISTOR 10K 5% .25W CF TC=0-400 | 77902 | R-25J |
| A34R63 | 0683-1035 | 1 | | RESISTOR 10K 5% .25W CF TC=0-400 | 77902 | R-25J |
| A34R64 | 0760-0009 | 1 | | RESISTOR 100K 2% 1W MO TC=0+-200 | 28480 | RG32 |
| A34TP1 | 1251-0600 | 0 | 8 | CONNECTOR-SGL CONT PIN 1.14-MM-BSC-SZ SQ27264 | 27264 | 16-06-0034 |
| A34TP2 | 1251-0600 | 0 | | CONNECTOR-SGL CONT PIN 1.14-MM-BSC-SZ SQ27264 | 27264 | 16-06-0034 |
| A34TP3 | 1251-0600 | 0 | | CONNECTOR-SGL CONT PIN 1.14-MM-BSC-SZ SQ27264 | 27264 | 16-06-0034 |
| A34TP4 | 1251-0600 | 0 | | CONNECTOR-SGL CONT PIN 1.14-MM-BSC-SZ SQ27264 | 27264 | 16-06-0034 |
| A34TP5 | 1251-0600 | 0 | | CONNECTOR-SGL CONT PIN 1.14-MM-BSC-SZ SQ27264 | 27264 | 16-06-0034 |
| A34TP6 | 1251-0600 | 0 | | CONNECTOR-SGL CONT PIN 1.14-MM-BSC-SZ SQ27264 | 27264 | 16-06-0034 |
| A34TP7 | 1251-0600 | 0 | | CONNECTOR-SGL CONT PIN 1.14-MM-BSC-SZ SQ27264 | 27264 | 16-06-0034 |
| A34TP8 | 1251-0600 | 0 | | CONNECTOR-SGL CONT PIN 1.14-MM-BSC-SZ SQ27264 | 27264 | 16-06-0034 |
| A34U1 | 1820-1196 | 8 | 2 | IC FF TTL LS D-TYPE POS-EDGE-TRIG COM | 01295 | |
| A34U2 | 1820-1144 | 6 | 2 | IC GATE TTL LS NOR QUAD 2-INP | 01295 | |
| A34U3 | 1820-1144 | 6 | | IC GATE TTL LS NOR QUAD 2-INP | 01295 | |
| A34U4 | 1820-1195 | 7 | 3 | IC FF TTL LS D-TYPE POS-EDGE-TRIG COM | 01295 | |
| A34U5 | 1820-1195 | 7 | | IC FF TTL LS D-TYPE POS-EDGE-TRIG COM | 01295 | |
| A34U6 | 1820-1196 | 8 | | IC FF TTL LS D-TYPE POS-EDGE-TRIG COM | 01295 | |
| A34U7 | 1826-0759 | 9 | 1 | IC COMPARATOR GP QUAD 14-DIP-C PKG | 27014 | |
| A34U8 | 1820-1197 | 9 | 2 | IC GATE TTL LS NAND QUAD 2-INP | 01295 | |
| A34U9 | 1820-1112 | 8 | 1 | IC FF TTL LS D-TYPE POS-EDGE-TRIG | 01295 | |
| A34U10 | 1820-1195 | 7 | | IC FF TTL LS D-TYPE POS-EDGE-TRIG COM | 01295 | |
| A34U11 | 1820-1431 | 4 | 1 | IC CNTR TTL LS DECD SYNCHRO | 01295 | |
| A34U12 | 1820-0054 | 5 | 1 | IC GATE TTL NAND QUAD 2-INP | 01295 | |

See introduction to this section for ordering information
* Indicates one of several possible values installed

# Table 9-3. Replaceable Parts

| Reference Designation | HP Part Number | C D | Qty. | Description | Mfr. Code | Mfr. Part Number |
|---|---|---|---|---|---|---|
| A34U13 | 1820-1204 | 9 | 1 | IC GATE TTL LS NAND DUAL 4-INP | 01295 | |
| A34U14 | 1820-1282 | 3 | 1 | IC FF TTL LS J-K BAR POS-EDGE-TRIG | 01295 | |
| A34U15 | 1820-1197 | 9 | | IC GATE TTL LS NAND QUAD 2-INP | 01295 | |
| A34U17 | 1820-0223 | 0 | 2 | IC OP AMP GP TO-99 PKG | 27014 | |
| A34U18 | 1826-0402 | 9 | 1 | IC V RGLTR-FXD-POS 14.2/15.8V TO-3 PKG | 06545P01 | |
| A34U19 | 1820-0223 | 0 | | IC OP AMP GP TO-99 PKG | 27014 | |
| | 4330-0496 | 3 | 2 | INSULATOR-BEAD GLASS | 53101 | KG12 |
| | 7121-4611 | 2 | 1 | LABEL-INFORMATION .15-IN-WD .6-IN-LG | 28480 | L01003 |
| **A50** | **03585-66550** | **1** | **1** | **TRACKING GENERATOR MOTHERBOARD** | **28480** | **03585-66550** |
| A50C1 | 0160-6506 | 3 | 14 | C-F .1UF 20% 50V CERMLr | 28480 | RPE121-978Z5U104M50V |
| A50C2 | 0160-6506 | 3 | | C-F .1UF 20% 50V CERMLr | 28480 | RPE121-978Z5U104M50V |
| A50C3 | 0160-6506 | 3 | | C-F .1UF 20% 50V CERMLr | 28480 | RPE121-978Z5U104M50V |
| A50C4 | 0160-6506 | 3 | | C-F .1UF 20% 50V CERMLr | 28480 | RPE121-978Z5U104M50V |
| A50C5 | 0160-6506 | 3 | | C-F .1UF 20% 50V CERMLr | 28480 | RPE121-978Z5U104M50V |
| A50C6 | 0160-6506 | 3 | | C-F .1UF 20% 50V CERMLr | 28480 | RPE121-978Z5U104M50V |
| A50C7 | 0160-6506 | 3 | | C-F .1UF 20% 50V CERMLr | 28480 | RPE121-978Z5U104M50V |
| A50C8 | 0160-6506 | 3 | | C-F .1UF 20% 50V CERMLr | 28480 | RPE121-978Z5U104M50V |
| A50C9 | 0160-6506 | 3 | | C-F .1UF 20% 50V CERMLr | 28480 | RPE121-978Z5U104M50V |
| A50C10 | 0160-6506 | 3 | | C-F .1UF 20% 50V CERMLr | 28480 | RPE121-978Z5U104M50V |
| A50C11 | 0160-6506 | 3 | | C-F .1UF 20% 50V CERMLr | 28480 | RPE121-978Z5U104M50V |
| A50C12 | 0160-6506 | 3 | | C-F .1UF 20% 50V CERMLr | 28480 | RPE121-978Z5U104M50V |
| A50C13 | 0160-6506 | 3 | | C-F .1UF 20% 50V CERMLr | 28480 | RPE121-978Z5U104M50V |
| A50C14 | 0160-6506 | 3 | | C-F .1UF 20% 50V CERMLr | 28480 | RPE121-978Z5U104M50V |
| A50H1 | 03585-21213 | 9 | 2 | MCHD NUT-CONN GUIDE | 07801P01 | |
| A50H2 | 03585-21213 | 9 | | MCHD NUT-CONN GUIDE | 07801P01 | |
| A50H3 | 1200-0547 | 7 | 1 | CON-CLIP | 52072 | CA-14-200-DL |
| A50J1 | 1250-1593 | 0 | 2 | ADAPTER-COAX STR M-SMB M-SMB | 98291 | 51-075-0000 |
| A50J2 | 1250-1593 | 0 | | ADAPTER-COAX STR M-SMB M-SMB | 98291 | 51-075-0000 |
| A50J3 | 1251-3276 | 2 | 1 | CONN-POST TYPE .156-PIN-SPCG 6-CONT | 27264 | 09-60-1061 |
| A50TP1 | 1251-0600 | 0 | 1 | CONNECTOR-SGL CONT PIN 1.14-MM-BSC-SZ SQ27264 | 27264 | 16-06-0034 |
| A50X1 | 1200-0548 | 8 | 1 | SOCKET-IC 14-CONT DIP DIP-SLDR | 52072 | CA-14S-10SD |
| A50X21 | 1251-2035 | 9 | 3 | CONNECTOR-PC EDGE 15-CONT/ROW 2-ROWS | 03394P01 | 220-624-03 |
| A50X51 | 1251-2035 | 9 | | CONNECTOR-PC EDGE 15-CONT/ROW 2-ROWS | 03394P01 | 220-624-03 |
| A50X52 | 1251-2035 | 9 | | CONNECTOR-PC EDGE 15-CONT/ROW 2-ROWS | 03394P01 | 220-624-03 |
| | 7121-4611 | 2 | 1 | LABEL-INFORMATION .15-IN-WD .6-IN-LG | 28480 | L01003 |
| **A51** | **03585-66551** | **2** | **1** | **TRACKING GENERATOR PHASE DETECTOR PC BD** | **28480** | **03585-66551** |
| A51C1 | 0140-0190 | 7 | 4 | CAPACITOR-FXD 39PF +-5% 300VDC MICA | 09023 | |
| A51C2 | 0140-0190 | 7 | | CAPACITOR-FXD 39PF +-5% 300VDC MICA | 09023 | |
| A51C5 | 0160-3847 | 9 | 7 | CAPACITOR-FXD .01UF +100-0% 50VDC CER | 04222 | SA105C103KAA |
| A51C6 | 0180-0374 | 3 | 1 | CAPACITOR-FXD 10UF+-10% 20VDC TA | 13606 | 150D106X9020B2-DYS |
| A51C8 | 0180-0309 | 4 | 1 | CAPACITOR-FXD 4.7UF+-20% 10VDC TA | 13606 | 150D475X0010A2-DYS |
| A51C9 | 0160-3538 | 5 | 1 | CAPACITOR-FXD 750PF +-5% 100VDC MICA | 00853 | |
| A51C10 | 0160-2202 | 8 | 2 | CAPACITOR-FXD 75PF +-5% 300VDC MICA | 00853 | |
| A51C14 | 0160-4571 | 8 | 16 | CAPACITOR-FXD .1UF +80-20% 50VDC CER | 04222 | SA105E104ZAA |
| A51C17 | 0160-4571 | 8 | | CAPACITOR-FXD .1UF +80-20% 50VDC CER | 04222 | SA105E104ZAA |
| A51C18 | 0160-4571 | 8 | | CAPACITOR-FXD .1UF +80-20% 50VDC CER | 04222 | SA105E104ZAA |
| A51C19 | 0160-4571 | 8 | | CAPACITOR-FXD .1UF +80-20% 50VDC CER | 04222 | SA105E104ZAA |
| A51C20 | 0140-0190 | 7 | | CAPACITOR-FXD 39PF +-5% 300VDC MICA | 09023 | |
| A51C21 | 0160-4532 | 1 | 2 | CAPACITOR-FXD 1000PF +-20% 50VDC CER | 04222 | SA105C102MAA |
| A51C22 | 0140-0190 | 7 | | CAPACITOR-FXD 39PF +-5% 300VDC MICA | 09023 | |
| A51C23 | 0160-4532 | 1 | | CAPACITOR-FXD 1000PF +-20% 50VDC CER | 04222 | SA105C102MAA |
| A51C26 | 0160-0196 | 5 | 1 | CAPACITOR-FXD 24PF +-5% 300VDC MICA | 09023 | |
| A51C27 | 0160-2200 | 6 | 1 | CAPACITOR-FXD 43PF +-5% 300VDC MICA | 00853 | |
| A51C28 | 0160-3847 | 9 | | CAPACITOR-FXD .01UF +100-0% 50VDC CER | 04222 | SA105C103KAA |
| A51C29 | 0160-3847 | 9 | | CAPACITOR-FXD .01UF +100-0% 50VDC CER | 04222 | SA105C103KAA |
| A51C31 | 0160-3847 | 9 | | CAPACITOR-FXD .01UF +100-0% 50VDC CER | 04222 | SA105C103KAA |
| A51C33 | 0160-3847 | 9 | | CAPACITOR-FXD .01UF +100-0% 50VDC CER | 04222 | SA105C103KAA |
| A51C34 | 0160-3847 | 9 | | CAPACITOR-FXD .01UF +100-0% 50VDC CER | 04222 | SA105C103KAA |
| A51C35 | 0160-3847 | 9 | | CAPACITOR-FXD .01UF +100-0% 50VDC CER | 04222 | SA105C103KAA |
| A51C36 | 0160-2202 | 8 | | CAPACITOR-FXD 75PF +-5% 300VDC MICA | 00853 | |
| A51C50 | 0180-1846 | 6 | 2 | CAPACITOR-FXD 2.2UF+-10% 35VDC TA | 13606 | 150D225X9035B2-DYS |

See introduction to this section for ordering information
* Indicates one of several possible values installed

# Table 9-3. Replaceable Parts

| Reference Designation | HP Part Number | C D | Qty. | Description | Mfr. Code | Mfr. Part Number |
|---|---|---|---|---|---|---|
| A51C51 | 0180-0291 | 3 | 2 | CAPACITOR-FXD 1UF+-10% 35VDC TA | 13606 | 150D105X9035A2-DYS |
| A51C52 | 0180-1846 | 6 | | CAPACITOR-FXD 2.2UF+-10% 35VDC TA | 13606 | 150D225X9035B2-DYS |
| A51C53 | 0180-0291 | 3 | | CAPACITOR-FXD 1UF+-10% 35VDC TA | 13606 | 150D105X9035A2-DYS |
| A51C60 | 0160-4571 | 8 | | CAPACITOR-FXD .1UF +80-20% 50VDC CER | 04222 | SA105E104ZAA |
| A51C61 | 0160-4571 | 8 | | CAPACITOR-FXD .1UF +80-20% 50VDC CER | 04222 | SA105E104ZAA |
| A51C62 | 0160-4571 | 8 | | CAPACITOR-FXD .1UF +80-20% 50VDC CER | 04222 | SA105E104ZAA |
| A51C63 | 0160-4571 | 8 | | CAPACITOR-FXD .1UF +80-20% 50VDC CER | 04222 | SA105E104ZAA |
| A51C64 | 0160-4571 | 8 | | CAPACITOR-FXD .1UF +80-20% 50VDC CER | 04222 | SA105E104ZAA |
| A51C65 | 0160-4571 | 8 | | CAPACITOR-FXD .1UF +80-20% 50VDC CER | 04222 | SA105E104ZAA |
| A51C66 | 0160-4571 | 8 | | CAPACITOR-FXD .1UF +80-20% 50VDC CER | 04222 | SA105E104ZAA |
| A51C67 | 0160-4571 | 8 | | CAPACITOR-FXD .1UF +80-20% 50VDC CER | 04222 | SA105E104ZAA |
| A51C70 | 0160-4571 | 8 | | CAPACITOR-FXD .1UF +80-20% 50VDC CER | 04222 | SA105E104ZAA |
| A51C71 | 0160-4571 | 8 | | CAPACITOR-FXD .1UF +80-20% 50VDC CER | 04222 | SA105E104ZAA |
| A51C72 | 0160-4571 | 8 | | CAPACITOR-FXD .1UF +80-20% 50VDC CER | 04222 | SA105E104ZAA |
| A51C73 | 0160-4571 | 8 | | CAPACITOR-FXD .1UF +80-20% 50VDC CER | 04222 | SA105E104ZAA |
| A51CR1 | 1902-1329 | 3 | 1 | IC V RGLTR-V-REF-FXD 6.6/7.2V TO-46 PKG | 27014 | LM329CH |
| A51CR2 | 0122-0333 | 2 | 2 | DIODE-VVC 29PF 10% C3/C10-MIN=2.1 | 10978P01 | |
| A51CR4 | 0122-0333 | 2 | | DIODE-VVC 29PF 10% C3/C10-MIN=2.1 | 10978P01 | |
| A51CR5 | 1901-0040 | 1 | 1 | DIODE-SWITCHING 30V 50MA 2NS DO-35 | 9N171 | |
| A51CR6 | 1902-0049 | 2 | 1 | DIODE-ZNR 6.19V 5% DO-35 PD=.4W | 04713 | |
| A51H1 | 03585-04109 | 6 | 1 | SHTF CVR-51 ALSK | 28480 | 03585-04109 |
| A51H2 | 0370-2583 | 3 | 1 | MOLD KNOB-THRD F 6-32 | 04533P01 | 3001-SD |
| A51H3 | 1200-0185 | 9 | 2 | INSULATOR-XSTR NYLON | 13103 | 7717-86N RED |
| A51H4 | 1200-0185 | 9 | | INSULATOR-XSTR NYLON | 13103 | 7717-86N RED |
| A51H9 | 2190-0124 | 4 | 2 | WASHER-LK INTL T NO. 10 .195-IN-ID | 98291 | 3002-26 |
| A51H10 | 2190-0124 | 4 | | WASHER-LK INTL T NO. 10 .195-IN-ID | 98291 | 3002-26 |
| A51H11 | 2950-0078 | 9 | 2 | NUT-HEX-DBL-CHAM 10-32-THD .067-IN-THK | 98291 | 33002-18-00-0-156 |
| A51H12 | 2950-0078 | 9 | | NUT-HEX-DBL-CHAM 10-32-THD .067-IN-THK | 98291 | 33002-18-00-0-156 |
| A51J1 | 1250-2142 | 7 | 2 | CON-SMB | 74970 | 131-3701-341 |
| A51J2 | 1250-2142 | 7 | | CON-SMB | 74970 | 131-3701-341 |
| A51L1 | 9140-0210 | 1 | 5 | INDUCTOR RF-CH-MLD 100UH 5% .166DX.385LG99800 | 99800 | 1537-76 |
| A51L2 | 9100-1624 | 9 | 1 | INDUCTOR RF-CH-MLD 30UH 5% .166DX.385LG | 99800 | 1537-50 |
| A51L3* | 9100-3552 | 6 | 0 | INDUCTOR RF-CH-MLD 1.5UH 5% .166DX.385LG24226 | 24226 | 15M151J |
| A51L3* | 9140-0261 | 2 | 0 | INDUCTOR RF-CH-MLD 100NH 5% .166DX.385LG24226 | 24226 | 15M100J |
| A51L3* | 9140-0266 | 7 | 1 | INDUCTOR RF-CH-MLD 1.8UH 5% .166DX.385LG24226 | 24226 | 15M181J |
| A51L3* | 9140-0283 | 8 | 0 | INDUCTOR RF-CH-MLD 910NH 5% .166DX.385LG24226 | 24226 | 15M910J |
| A51L4 | 9140-0285 | 0 | 2 | INDUCTOR RF-CH-MLD 3UH 5% .166DX.385LG | 24226 | 15M301J |
| A51L5 | 9140-0285 | 0 | | INDUCTOR RF-CH-MLD 3UH 5% .166DX.385LG | 24226 | 15M301J |
| A51L6 | 9140-0210 | 1 | | INDUCTOR RF-CH-MLD 100UH 5% .166DX.385LG99800 | 99800 | 1537-76 |
| A51L7 | 9140-0284 | 9 | 1 | INDUCTOR RF-CH-MLD 2.4UH 5% .166DX.385LG24226 | 24226 | 15M241J |
| A51L8 | 9100-3551 | 5 | 7 | INDUCTOR RF-CH-MLD 1UH 5% .166DX.385LG | 24226 | 15M101J |
| A51L9 | 9100-3551 | 5 | | INDUCTOR RF-CH-MLD 1UH 5% .166DX.385LG | 24226 | 15M101J |
| A51L10 | 9100-3551 | 5 | | INDUCTOR RF-CH-MLD 1UH 5% .166DX.385LG | 24226 | 15M101J |
| A51L11 | 9140-0210 | 1 | | INDUCTOR RF-CH-MLD 100UH 5% .166DX.385LG99800 | 99800 | 1537-76 |
| A51L12 | 9140-0210 | 1 | | INDUCTOR RF-CH-MLD 100UH 5% .166DX.385LG99800 | 99800 | 1537-76 |
| A51L13 | 9140-0210 | 1 | | INDUCTOR RF-CH-MLD 100UH 5% .166DX.385LG99800 | 99800 | 1537-76 |
| A51L14 | 9100-3551 | 5 | | INDUCTOR RF-CH-MLD 1UH 5% .166DX.385LG | 24226 | 15M101J |
| A51L15 | 9100-3551 | 5 | | INDUCTOR RF-CH-MLD 1UH 5% .166DX.385LG | 24226 | 15M101J |
| A51L16 | 9100-3551 | 5 | | INDUCTOR RF-CH-MLD 1UH 5% .166DX.385LG | 24226 | 15M101J |
| A51L17 | 9100-3551 | 5 | | INDUCTOR RF-CH-MLD 1UH 5% .166DX.385LG | 24226 | 15M101J |
| A51L20 | 9100-3562 | 8 | 1 | INDUCTOR RF-CH-MLD 4.7UH 5% .166DX.385LG24226 | 24226 | 15M471J |
| A51Q1 | 1853-0010 | 2 | 1 | TRANSISTOR PNP SI TO-18 PD=360MW | 04713 | |
| A51Q2 | 1854-0215 | 1 | 2 | TRANSISTOR NPN SI PD=350MW FT=300MHZ | 04713 | |
| A51Q3 | 1854-0215 | 1 | | TRANSISTOR NPN SI PD=350MW FT=300MHZ | 04713 | |
| A51Q4 | 1853-0640 | 4 | 4 | XTR SML1PNP** | 27014 | 6692 |
| A51Q5 | 1853-0640 | 4 | | XTR SML1PNP** | 27014 | 6692 |
| A51Q6 | 1854-0485 | 7 | 2 | TRANSISTOR NPN SI TO-104 PD=175MW | 04713 | |
| A51Q7 | 1854-0485 | 7 | | TRANSISTOR NPN SI TO-104 PD=175MW | 04713 | |
| A51Q8 | 1853-0640 | 4 | | XTR SML1PNP** | 27014 | 6692 |
| A51Q9 | 1853-0640 | 4 | | XTR SML1PNP** | 27014 | 6692 |
| A51R1 | 0698-6801 | 0 | 3 | RESISTOR 3.48K 1% .125W F TC=0+-25 | 19701 | 5033R |
| A51R2 | 0698-4504 | 6 | 1 | RESISTOR 69.8K 1% .125W F TC=0+-100 | 91637 | CMF-55-1, T-1 |
| A51R3 | 0683-1035 | 1 | 8 | RESISTOR 10K 5% .25W CF TC=0-400 | 77902 | R-25J |
| A51R4 | 0683-1035 | 1 | | RESISTOR 10K 5% .25W CF TC=0-400 | 77902 | R-25J |
| A51R5 | 0698-6801 | 0 | | RESISTOR 3.48K 1% .125W F TC=0+-25 | 19701 | 5033R |

See introduction to this section for ordering information
* Indicates one of several possible values installed

# Table 9-3. Replaceable Parts

| Reference Designation | HP Part Number | C D | Qty. | Description | Mfr. Code | Mfr. Part Number |
|---|---|---|---|---|---|---|
| A51R6 | 0698-6801 | 0 | | RESISTOR 3.48K 1% .125W F TC=0+-25 | 19701 | 5033R |
| A51R7 | 0698-3459 | 8 | 1 | RESISTOR 383K 1% .125W F TC=0+-100 | 19701 | SFR25H |
| A51R8 | 0698-3558 | 8 | 1 | RESISTOR 4.02K 1% .125W F TC=0+-100 | 19701 | SFR25H |
| A51R9 | 0683-1025 | 9 | 8 | RESISTOR 1K 5% .25W CF TC=0-400 | 77902 | R-25J |
| A51R10 | 0683-2245 | 7 | 1 | RESISTOR 220K 5% .25W CF TC=0-800 | 77902 | R-25J |
| A51R11 | 0683-1535 | 6 | 1 | RESISTOR 15K 5% .25W CF TC=0-400 | 77902 | R-25J |
| A51R12 | 0683-1225 | 1 | 1 | RESISTOR 1.2K 5% .25W CF TC=0-400 | 77902 | R-25J |
| A51R13 | 0683-4705 | 8 | 7 | RESISTOR 47 5% .25W CF TC=0-400 | 77902 | R-25J |
| A51R14 | 0683-1035 | 1 | | RESISTOR 10K 5% .25W CF TC=0-400 | 77902 | R-25J |
| A51R15 | 0683-1025 | 9 | | RESISTOR 1K 5% .25W CF TC=0-400 | 77902 | R-25J |
| A51R16 | 0683-2725 | 8 | 2 | RESISTOR 2.7K 5% .25W CF TC=0-400 | 77902 | R-25J |
| A51R19 | 0683-4705 | 8 | | RESISTOR 47 5% .25W CF TC=0-400 | 77902 | R-25J |
| A51R20 | 0683-1035 | 1 | | RESISTOR 10K 5% .25W CF TC=0-400 | 77902 | R-25J |
| A51R21 | 0683-1025 | 9 | | RESISTOR 1K 5% .25W CF TC=0-400 | 77902 | R-25J |
| A51R22 | 0683-4705 | 8 | | RESISTOR 47 5% .25W CF TC=0-400 | 77902 | R-25J |
| A51R24 | 0683-1035 | 1 | | RESISTOR 10K 5% .25W CF TC=0-400 | 77902 | R-25J |
| A51R25 | 0683-1035 | 1 | | RESISTOR 10K 5% .25W CF TC=0-400 | 77902 | R-25J |
| A51R26 | 0683-4725 | 2 | 4 | RESISTOR 4.7K 5% .25W CF TC=0-400 | 77902 | R-25J |
| A51R27 | 0683-1035 | 1 | | RESISTOR 10K 5% .25W CF TC=0-400 | 77902 | R-25J |
| A51R28 | 0683-1035 | 1 | | RESISTOR 10K 5% .25W CF TC=0-400 | 77902 | R-25J |
| A51R29 | 0683-4725 | 2 | | RESISTOR 4.7K 5% .25W CF TC=0-400 | 77902 | R-25J |
| A51R32 | 0683-3315 | 4 | 2 | RESISTOR 330 5% .25W CF TC=0-400 | 77902 | R-25J |
| A51R33 | 0683-5105 | 4 | 8 | RESISTOR 51 5% .25W CF TC=0-400 | 77902 | R-25J |
| A51R34 | 0683-5105 | 4 | | RESISTOR 51 5% .25W CF TC=0-400 | 77902 | R-25J |
| A51R35 | 0683-1335 | 4 | 1 | RESISTOR 13K 5% .25W CF TC=0-400 | 77902 | R-25J |
| A51R36 | 0683-5105 | 4 | | RESISTOR 51 5% .25W CF TC=0-400 | 77902 | R-25J |
| A51R37 | 0683-4725 | 2 | | RESISTOR 4.7K 5% .25W CF TC=0-400 | 77902 | R-25J |
| A51R38 | 0683-6215 | 9 | 2 | RESISTOR 620 5% .25W CF TC=0-400 | 77902 | R-25J |
| A51R39 | 0683-6215 | 9 | | RESISTOR 620 5% .25W CF TC=0-400 | 77902 | R-25J |
| A51R40 | 0683-3305 | 2 | 2 | RESISTOR 33 5% .25W CF TC=0-400 | 77902 | R-25J |
| A51R41 | 0683-5105 | 4 | | RESISTOR 51 5% .25W CF TC=0-400 | 77902 | R-25J |
| A51R42 | 0683-3305 | 2 | | RESISTOR 33 5% .25W CF TC=0-400 | 77902 | R-25J |
| A51R43 | 0683-5105 | 4 | | RESISTOR 51 5% .25W CF TC=0-400 | 77902 | R-25J |
| A51R45 | 0683-2415 | 3 | 2 | RESISTOR 240 5% .25W CF TC=0-400 | 77902 | R-25J |
| A51R46 | 0683-2415 | 3 | | RESISTOR 240 5% .25W CF TC=0-400 | 77902 | R-25J |
| A51R47 | 0683-5105 | 4 | | RESISTOR 51 5% .25W CF TC=0-400 | 77902 | R-25J |
| A51R48 | 0683-5105 | 4 | | RESISTOR 51 5% .25W CF TC=0-400 | 77902 | R-25J |
| A51R49 | 0683-3315 | 4 | | RESISTOR 330 5% .25W CF TC=0-400 | 77902 | R-25J |
| A51R50 | 0683-2425 | 5 | 2 | RESISTOR 2.4K 5% .25W CF TC=0-400 | 77902 | R-25J |
| A51R51 | 0683-4725 | 2 | | RESISTOR 4.7K 5% .25W CF TC=0-400 | 77902 | R-25J |
| A51R52 | 0683-5105 | 4 | | RESISTOR 51 5% .25W CF TC=0-400 | 77902 | R-25J |
| A51R53 | 0683-1025 | 9 | | RESISTOR 1K 5% .25W CF TC=0-400 | 77902 | R-25J |
| A51R60 | 0683-3925 | 2 | 2 | RESISTOR 3.9K 5% .25W CF TC=0-400 | 77902 | R-25J |
| A51R61 | 0683-4705 | 8 | | RESISTOR 47 5% .25W CF TC=0-400 | 77902 | R-25J |
| A51R62 | 0698-0083 | 8 | 2 | RESISTOR 1.96K 1% .125W F TC=0+-100 | 19701 | SFR25H |
| A51R63 | 0683-4705 | 8 | | RESISTOR 47 5% .25W CF TC=0-400 | 77902 | R-25J |
| A51R64 | 0683-4715 | 0 | 2 | RESISTOR 470 5% .25W CF TC=0-400 | 77902 | R-25J |
| A51R66 | 0698-0083 | 8 | | RESISTOR 1.96K 1% .125W F TC=0+-100 | 19701 | SFR25H |
| A51R67 | 0683-4715 | 0 | | RESISTOR 470 5% .25W CF TC=0-400 | 77902 | R-25J |
| A51R68 | 0683-2725 | 8 | | RESISTOR 2.7K 5% .25W CF TC=0-400 | 77902 | R-25J |
| A51R69 | 0683-4705 | 8 | | RESISTOR 47 5% .25W CF TC=0-400 | 77902 | R-25J |
| A51R70 | 0683-3925 | 2 | | RESISTOR 3.9K 5% .25W CF TC=0-400 | 77902 | R-25J |
| A51R71 | 0683-1025 | 9 | | RESISTOR 1K 5% .25W CF TC=0-400 | 77902 | R-25J |
| A51R72 | 0683-1025 | 9 | | RESISTOR 1K 5% .25W CF TC=0-400 | 77902 | R-25J |
| A51R73 | 0683-1025 | 9 | | RESISTOR 1K 5% .25W CF TC=0-400 | 77902 | R-25J |
| A51R74 | 0683-2425 | 5 | | RESISTOR 2.4K 5% .25W CF TC=0-400 | 77902 | R-25J |
| A51R75 | 0683-4705 | 8 | | RESISTOR 47 5% .25W CF TC=0-400 | 77902 | R-25J |
| A51R76 | 0683-1025 | 9 | | RESISTOR 1K 5% .25W CF TC=0-400 | 77902 | R-25J |
| A51T1 | 08552-6044 | 1 | 1 | XFC TOROID BAL | 28480 | 08552-6044 |
| A51TP1 | 1251-0600 | 0 | 3 | CONNECTOR-SGL CONT PIN 1.14-MM-BSC-SZ SQ27264 | 27264 | 16-06-0034 |
| A51TP2 | 1251-0600 | 0 | | CONNECTOR-SGL CONT PIN 1.14-MM-BSC-SZ SQ27264 | 27264 | 16-06-0034 |
| A51TP3 | 1251-0600 | 0 | | CONNECTOR-SGL CONT PIN 1.14-MM-BSC-SZ SQ27264 | 27264 | 16-06-0034 |
| A51U1 | 1820-1196 | 8 | 2 | IC FF TTL LS D-TYPE POS-EDGE-TRIG COM | 01295 | |
| A51U2 | 1826-0188 | 8 | 2 | D/A 8-BIT 16-CERDIP BPLR | 04713 | |
| A51U3 | 1820-1196 | 8 | | IC FF TTL LS D-TYPE POS-EDGE-TRIG COM | 01295 | |

See introduction to this section for ordering information
* Indicates one of several possible values installed

# Table 9-3. Replaceable Parts

| Reference Designation | HP Part Number | C D | Qty. | Description | Mfr. Code | Mfr. Part Number |
|---|---|---|---|---|---|---|
| A51U4 | 1826-0188 | 8 | | D/A 8-BIT 16-CERDIP BPLR | 04713 | |
| A51U5 | 1826-0043 | 4 | 2 | IC OP AMP GP TO-99 PKG | 27014 | |
| A51U6 | 1826-0043 | 4 | | IC OP AMP GP TO-99 PKG | 27014 | |
| A51U7 | 1820-1197 | 9 | 1 | IC GATE TTL LS NAND QUAD 2-INP | 01295 | |
| A51U8 | 1820-0693 | 8 | 1 | IC FF TTL S D-TYPE POS-EDGE-TRIG | 01295 | |
| A51U9 | 1826-0309 | 5 | 1 | IC OP AMP WB TO-99 PKG | 24355 | |
| A51U10 | 1858-0004 | 4 | 1 | TRANSISTOR ARRAY 12-PIN MET TO-101 | 04550P03 | |
| A51U12 | 1826-0512 | 2 | 1 | IC V RGLTR-FXD-POS 14.4/15.6V TO-39 PKG | 04713 | |
| A51U13 | 1826-0511 | 1 | 1 | IC V RGLTR-FXD-NEG 14.4/15.6V TO-39 PKG | 28480 | 1826-0511 |
| A51Y1 | 0410-1137 | 7 | 1 | CRYSTAL-QUARTZ 10.34000 MHZ | 33096 | |
| | 7121-4611 | 2 | 1 | LABEL-INFORMATION .15-IN-WD .6-IN-LG | 28480 | L01003 |
| | 9140-0266 | 7 | | INDUCTOR RF-CH-MLD 1.8UH 5% .166DX.385LG24226 | 24226 | 15M181J |
| | 1205-0011 | 0 | 2 | HEAT SINK TO-5/TO-39-CS | 98978 | TXBF-032-025B |
| | 1205-0011 | 0 | | HEAT SINK TO-5/TO-39-CS | 98978 | TXBF-032-025B |
| **A52** | **03585-66552** | **3** | **1** | **TRACKING GENERATOR (OUTPUT) PC BD** | **28480** | **03585-66552** |
| A52C2 | 0180-0291 | 3 | 1 | CAPACITOR-FXD 1UF+-10% 35VDC TA | 13606 | 150D105X9035A2-DYS |
| A52C3 | 0160-6509 | 6 | 3 | C-F .1UF --% 100V CERMLr | 28480 | RPE122-977Z5U104Z100V |
| A52C4 | 0160-2055 | 9 | 18 | CAPACITOR-FXD .01UF +80-20% 100VDC CER | 59660 | 805-504 Y5V 103Z |
| A52C5 | 0160-3456 | 6 | 2 | CAPACITOR-FXD 1000PF +-10% 1KVDC CER | 59660 | 808-542 X5E 102K |
| A52C6 | 0160-6509 | 6 | | C-F .1UF --% 100V CERMLr | 28480 | RPE122-977Z5U104Z100V |
| A52C9 | 0160-2055 | 9 | | CAPACITOR-FXD .01UF +80-20% 100VDC CER | 59660 | 805-504 Y5V 103Z |
| A52C10 | 0180-0210 | 6 | 3 | CAPACITOR-FXD 3.3UF+-20% 15VDC TA | 13606 | 150D335X0015A2-DYS |
| A52C11 | 0180-0228 | 6 | 3 | CAPACITOR-FXD 22UF+-10% 15VDC TA | 13606 | 150D226X9015B2-DYS |
| A52C12 | 0160-2055 | 9 | | CAPACITOR-FXD .01UF +80-20% 100VDC CER | 59660 | 805-504 Y5V 103Z |
| A52C13 | 0180-0210 | 6 | | CAPACITOR-FXD 3.3UF+-20% 15VDC TA | 13606 | 150D335X0015A2-DYS |
| A52C14 | 0180-0228 | 6 | | CAPACITOR-FXD 22UF+-10% 15VDC TA | 13606 | 150D226X9015B2-DYS |
| A52C15 | 0180-0228 | 6 | | CAPACITOR-FXD 22UF+-10% 15VDC TA | 13606 | 150D226X9015B2-DYS |
| A52C16 | 0121-0180 | 5 | 1 | CAPACITOR-V TRMR-CER 15-60PF 200V PC-MTG52763 | 52763 | 304324 15/60PF N1500 |
| A52C18 | 0160-6865 | 7 | 1 | C-F 5.1PF --% 500V CERTBr | 59660 | 301 089 COH0 519C |
| A52C19 | 0160-6855 | 5 | 2 | C-F .51PF --% 500V CERTBr | 59660 | 301 089 COK0 518C |
| A52C20 | 0160-6866 | 8 | 1 | C-F 5.6PF --% 500V CERTBr | 59660 | 301 089 COH0 569C |
| A52C21 | 0160-6853 | 3 | 1 | C-F 1.5PF % 500V CERTB | 59660 | 301 089 COK0 159C |
| A52C22 | 0160-2241 | 5 | 1 | CAPACITOR-FXD 2.2PF +-.25PF 500VDC CER | 52763 | |
| A52C24 | 0160-2055 | 9 | | CAPACITOR-FXD .01UF +80-20% 100VDC CER | 59660 | 805-504 Y5V 103Z |
| A52C25 | 0160-2055 | 9 | | CAPACITOR-FXD .01UF +80-20% 100VDC CER | 59660 | 805-504 Y5V 103Z |
| A52C26 | 0160-2055 | 9 | | CAPACITOR-FXD .01UF +80-20% 100VDC CER | 59660 | 805-504 Y5V 103Z |
| A52C27 | 0160-2055 | 9 | | CAPACITOR-FXD .01UF +80-20% 100VDC CER | 59660 | 805-504 Y5V 103Z |
| A52C28 | 0160-6509 | 6 | | C-F .1UF --% 100V CERMLr | 28480 | RPE122-977Z5U104Z100V |
| A52C29 | 0160-2261 | 9 | 2 | CAPACITOR-FXD 15PF +-5% 500VDC CER 0+-3052763 | 52763 | |
| A52C30 | 0160-6855 | 5 | | C-F .51PF --% 500V CERTBr | 59660 | 301 089 COK0 518C |
| A52C31 | 0160-6874 | 8 | 1 | C-F 20PF 5% 500V CERTBr | 59660 | 301 089 COG0 200J |
| A52C32 | 0160-2055 | 9 | | CAPACITOR-FXD .01UF +80-20% 100VDC CER | 59660 | 805-504 Y5V 103Z |
| A52C33 | 0160-2261 | 9 | | CAPACITOR-FXD 15PF +-5% 500VDC CER 0+-3052763 | 52763 | |
| A52C34 | 0160-2055 | 9 | | CAPACITOR-FXD .01UF +80-20% 100VDC CER | 59660 | 805-504 Y5V 103Z |
| A52C35 | 0160-2055 | 9 | | CAPACITOR-FXD .01UF +80-20% 100VDC CER | 59660 | 805-504 Y5V 103Z |
| A52C36 | 0160-3456 | 6 | | CAPACITOR-FXD 1000PF +-10% 1KVDC CER | 59660 | 808-542 X5E 102K |
| A52C37 | 0160-2055 | 9 | | CAPACITOR-FXD .01UF +80-20% 100VDC CER | 59660 | 805-504 Y5V 103Z |
| A52C38 | 0160-2055 | 9 | | CAPACITOR-FXD .01UF +80-20% 100VDC CER | 59660 | 805-504 Y5V 103Z |
| A52C39 | 0160-2055 | 9 | | CAPACITOR-FXD .01UF +80-20% 100VDC CER | 59660 | 805-504 Y5V 103Z |
| A52C40 | 0160-2055 | 9 | | CAPACITOR-FXD .01UF +80-20% 100VDC CER | 59660 | 805-504 Y5V 103Z |
| A52C41 | 0160-2055 | 9 | | CAPACITOR-FXD .01UF +80-20% 100VDC CER | 59660 | 805-504 Y5V 103Z |
| A52C42 | 0160-2257 | 3 | 1 | CAPACITOR-FXD 10PF +-5% 500VDC CER 0+-6052763 | 52763 | |
| A52C44 | 0160-2046 | 8 | 1 | CAPACITOR-FXD 2PF +-.5PF 500VDC MICA | 00853 | |
| A52C57 | 0160-2055 | 9 | | CAPACITOR-FXD .01UF +80-20% 100VDC CER | 59660 | 805-504 Y5V 103Z |
| A52C58 | 0140-0190 | 7 | 1 | CAPACITOR-FXD 39PF +-5% 300VDC MICA | 09023 | |
| A52C59 | 0160-2197 | 0 | 1 | CAPACITOR-FXD 10PF +-5% 300VDC MICA | 00853 | |
| A52C61 | 0160-2055 | 9 | | CAPACITOR-FXD .01UF +80-20% 100VDC CER | 59660 | 805-504 Y5V 103Z |
| A52C62 | 0160-2055 | 9 | | CAPACITOR-FXD .01UF +80-20% 100VDC CER | 59660 | 805-504 Y5V 103Z |
| A52C63 | 0180-0210 | 6 | | CAPACITOR-FXD 3.3UF+-20% 15VDC TA | 13606 | 150D335X0015A2-DYS |
| A52CR3 | 1902-3149 | 9 | 2 | DIODE-ZNR 9.09V 5% DO-35 PD=.4W | 04713 | |
| A52CR4 | 1902-3149 | 9 | | DIODE-ZNR 9.09V 5% DO-35 PD=.4W | 04713 | |
| A52CR6 | 1902-3128 | 4 | 1 | DIODE-ZNR 7.32V 5% DO-35 PD=.4W | 04713 | |
| A52CR7 | 1901-0040 | 1 | 2 | DIODE-SWITCHING 30V 50MA 2NS DO-35 | 9N171 | |
| A52CR10 | 1901-0040 | 1 | | DIODE-SWITCHING 30V 50MA 2NS DO-35 | 9N171 | |
| A52CR11 | 1901-0050 | 3 | 2 | DIODE-SWITCHING 80V 200MA 2NS DO-35 | 9N171 | |

See introduction to this section for ordering information
* Indicates one of several possible values installed

# Table 9-3. Replaceable Parts

| Reference Designation | HP Part Number | C D | Qty. | Description | Mfr. Code | Mfr. Part Number |
|---|---|---|---|---|---|---|
| A52CR12 | 1901-0050 | 3 | | DIODE-SWITCHING 80V 200MA 2NS DO-35 | 9N171 | |
| A52CR13 | 1902-3002 | 3 | 2 | DIODE-ZNR 2.37V 5% DO-7 PD=.4W TC=-.074%04713 | 04713 | |
| A52CR14 | 1902-3002 | 3 | | DIODE-ZNR 2.37V 5% DO-7 PD=.4W TC=-.074%04713 | 04713 | |
| A52H1 | 03585-00602 | 6 | 1 | SHTF ASSY-52 SHLD STLT | 28480 | 03585-00602 |
| A52H2 | 03585-04108 | 5 | 1 | SHTF CVR-52 ALSK | 28480 | 03585-04108 |
| A52H3 | 03585-24113 | 4 | 1 | MCHD CVR-RECT PLT 52 STLT | 28480 | |
| A52H4 | 0370-2583 | 3 | 1 | MOLD KNOB-THRD F 6-32 | 04533P01 | 3001-SD |
| A52H5 | 0380-0003 | 9 | 2 | SPCR-RD .18ID.25D .12LG BRSNI | 28480 | |
| A52H6 | 0380-0003 | 9 | | SPCR-RD .18ID.25D .12LG BRSNI | 28480 | |
| A52H7 | 0590-0526 | 6 | 2 | THREADED INSERT-NUT 4-40 .065-IN-LG SST | 46384 | KFS2-440 |
| A52H8 | 0590-0526 | 6 | | THREADED INSERT-NUT 4-40 .065-IN-LG SST | 46384 | KFS2-440 |
| A52H9 | 2190-0124 | 4 | 5 | WASHER-LK INTL T NO. 10 .195-IN-ID | 98291 | 3002-26 |
| A52H10 | 2190-0124 | 4 | | WASHER-LK INTL T NO. 10 .195-IN-ID | 98291 | 3002-26 |
| A52H11 | 2190-0124 | 4 | | WASHER-LK INTL T NO. 10 .195-IN-ID | 98291 | 3002-26 |
| A52H12 | 2190-0124 | 4 | | WASHER-LK INTL T NO. 10 .195-IN-ID | 98291 | 3002-26 |
| A52H13 | 2190-0124 | 4 | | WASHER-LK INTL T NO. 10 .195-IN-ID | 98291 | 3002-26 |
| A52H14 | 2200-0103 | 2 | 3 | SCREW-MACH 4-40 .25-IN-LG PAN-HD-POZI | 83486 | |
| A52H15 | 2200-0103 | 2 | | SCREW-MACH 4-40 .25-IN-LG PAN-HD-POZI | 83486 | |
| A52H16 | 2200-0103 | 2 | | SCREW-MACH 4-40 .25-IN-LG PAN-HD-POZI | 83486 | |
| A52H17 | 2200-0107 | 6 | 2 | SCREW-MACH 4-40 .375-IN-LG PAN-HD-POZI | 83486 | |
| A52H18 | 2200-0107 | 6 | | SCREW-MACH 4-40 .375-IN-LG PAN-HD-POZI | 83486 | |
| A52H19 | 2360-0193 | 8 | 1 | SCREW-MACH 6-32 .25-IN-LG PAN-HD-POZI | 83486 | |
| A52H20 | 2950-0078 | 9 | 5 | NUT-HEX-DBL-CHAM 10-32-THD .067-IN-THK | 98291 | 33002-18-00-0-156 |
| A52H21 | 2950-0078 | 9 | | NUT-HEX-DBL-CHAM 10-32-THD .067-IN-THK | 98291 | 33002-18-00-0-156 |
| A52H22 | 2950-0078 | 9 | | NUT-HEX-DBL-CHAM 10-32-THD .067-IN-THK | 98291 | 33002-18-00-0-156 |
| A52H23 | 2950-0078 | 9 | | NUT-HEX-DBL-CHAM 10-32-THD .067-IN-THK | 98291 | 33002-18-00-0-156 |
| A52H24 | 2950-0078 | 9 | | NUT-HEX-DBL-CHAM 10-32-THD .067-IN-THK | 98291 | 33002-18-00-0-156 |
| A52H45 | 5001-0176 | 0 | 2 | STMP GRD STRAP | 28480 | 5001-0176 |
| A52H46 | 5001-0176 | 0 | | STMP GRD STRAP | 28480 | 5001-0176 |
| A52J1 | 1250-2142 | 7 | 5 | CON-SMB | 74970 | 131-3701-341 |
| A52J2 | 1250-2142 | 7 | | CON-SMB | 74970 | 131-3701-341 |
| A52J3 | 1250-2142 | 7 | | CON-SMB | 74970 | 131-3701-341 |
| A52J4 | 1250-2142 | 7 | | CON-SMB | 74970 | 131-3701-341 |
| A52J5 | 1250-2142 | 7 | | CON-SMB | 74970 | 131-3701-341 |
| A52J7 | 1251-5203 | 9 | 1 | CONN-POST TYPE .100-PIN-SPCG 6-CONT | 27264 | 22-10-2062 |
| A52L2 | 9140-0144 | 0 | 7 | INDUCTOR RF-CH-MLD 4.7UH 10% .105DX.26LG99800 | 99800 | 1025-36 |
| A52L3 | 9140-0144 | 0 | | INDUCTOR RF-CH-MLD 4.7UH 10% .105DX.26LG99800 | 99800 | 1025-36 |
| A52L4 | 9140-0144 | 0 | | INDUCTOR RF-CH-MLD 4.7UH 10% .105DX.26LG99800 | 99800 | 1025-36 |
| A52L6 | 9140-0283 | 8 | 1 | INDUCTOR RF-CH-MLD 910NH 5% .166DX.385LG24226 | 24226 | 15M910J |
| A52L7 | 9100-2258 | 7 | 1 | INDUCTOR RF-CH-MLD 1.2UH 10% .105DX.26LG99800 | 99800 | 1025-22 |
| A52L9 | 9140-0144 | 0 | | INDUCTOR RF-CH-MLD 4.7UH 10% .105DX.26LG99800 | 99800 | 1025-36 |
| A52L11 | 9100-2252 | 1 | 1 | INDUCTOR RF-CH-MLD 270NH 10% .105DX.26LG24226 | 24226 | 10M270K |
| A52L14 | 9140-0286 | 1 | 1 | INDUCTOR RF-CH-MLD 300NH 5% .166DX.385LG24226 | 24226 | 15M300J |
| A52L16 | 9140-0144 | 0 | | INDUCTOR RF-CH-MLD 4.7UH 10% .105DX.26LG99800 | 99800 | 1025-36 |
| A52L17 | 9140-0158 | 6 | 1 | INDUCTOR RF-CH-MLD 1UH 10% .105DX.26LG | 32159 | 1A1002M +-10% |
| A52L18 | 9140-0144 | 0 | | INDUCTOR RF-CH-MLD 4.7UH 10% .105DX.26LG99800 | 99800 | 1025-36 |
| A52L30 | 9140-0144 | 0 | | INDUCTOR RF-CH-MLD 4.7UH 10% .105DX.26LG99800 | 99800 | 1025-36 |
| A52Q4 | 1855-0395 | 0 | 2 | TRANSISTOR J-FET N-CHAN D-MODE TO-52 SI | 17856 | |
| A52Q5 | 1855-0395 | 0 | | TRANSISTOR J-FET N-CHAN D-MODE TO-52 SI | 17856 | |
| A52Q6 | 1854-0345 | 8 | 2 | TRANSISTOR NPN 2N5179 SI TO-72 PD=200MW | 04713 | |
| A52Q7 | 1854-0019 | 3 | 4 | TRANSISTOR NPN SI TO-18 PD=360MW | 04713 | |
| A52Q8 | 1853-0034 | 0 | 2 | TRANSISTOR PNP SI TO-18 PD=360MW | 04713 | |
| A52Q9 | 1854-0345 | 8 | | TRANSISTOR NPN 2N5179 SI TO-72 PD=200MW | 04713 | |
| A52Q10 | 1854-0019 | 3 | | TRANSISTOR NPN SI TO-18 PD=360MW | 04713 | |
| A52Q11 | 1853-0034 | 0 | | TRANSISTOR PNP SI TO-18 PD=360MW | 04713 | |
| A52Q12 | 1854-0485 | 7 | 6 | TRANSISTOR NPN SI TO-104 PD=175MW | 04713 | |
| A52Q13 | 1854-0485 | 7 | | TRANSISTOR NPN SI TO-104 PD=175MW | 04713 | |
| A52Q14 | 1854-0485 | 7 | | TRANSISTOR NPN SI TO-104 PD=175MW | 04713 | |
| A52Q15 | 1854-0485 | 7 | | TRANSISTOR NPN SI TO-104 PD=175MW | 04713 | |
| A52Q16 | 1854-0485 | 7 | | TRANSISTOR NPN SI TO-104 PD=175MW | 04713 | |
| A52Q17 | 1854-0485 | 7 | | TRANSISTOR NPN SI TO-104 PD=175MW | 04713 | |
| A52Q30 | 1855-0420 | 2 | 6 | TRANSISTOR J-FET 2N4391 N-CHAN D-MODE | 17856 | |
| A52Q31 | 1855-0420 | 2 | | TRANSISTOR J-FET 2N4391 N-CHAN D-MODE | 17856 | |
| A52Q32 | 1855-0420 | 2 | | TRANSISTOR J-FET 2N4391 N-CHAN D-MODE | 17856 | |
| A52Q33 | 1855-0420 | 2 | | TRANSISTOR J-FET 2N4391 N-CHAN D-MODE | 17856 | |

See introduction to this section for ordering information
* Indicates one of several possible values installed

# Table 9-3. Replaceable Parts

| Reference Designation | HP Part Number | C D | Qty. | Description | Mfr. Code | Mfr. Part Number |
|---|---|---|---|---|---|---|
| A52Q34 | 1855-0420 | 2 | | TRANSISTOR J-FET 2N4391 N-CHAN D-MODE | 17856 | |
| A52Q35 | 1855-0420 | 2 | | TRANSISTOR J-FET 2N4391 N-CHAN D-MODE | 17856 | |
| A52Q36 | 1854-0019 | 3 | | TRANSISTOR NPN SI TO-18 PD=360MW | 04713 | |
| A52Q37 | 1853-0405 | 9 | 1 | TRANSISTOR PNP SI PD=300MW FT=850MHZ | 04713 | |
| A52Q38 | 1854-0019 | 3 | | TRANSISTOR NPN SI TO-18 PD=360MW | 04713 | |
| A52R3 | 0683-1325 | 2 | 1 | RESISTOR 1.3K 5% .25W CF TC=0-400 | 77902 | R-25J |
| A52R4 | 0683-1505 | 0 | 2 | RESISTOR 15 5% .25W CF TC=0-400 | 77902 | R-25J |
| A52R6 | 0683-1025 | 9 | 1 | RESISTOR 1K 5% .25W CF TC=0-400 | 77902 | R-25J |
| A52R9 | 0683-1535 | 6 | 1 | RESISTOR 15K 5% .25W CF TC=0-400 | 77902 | R-25J |
| A52R10 | 0683-1525 | 4 | 3 | RESISTOR 1.5K 5% .25W CF TC=0-400 | 77902 | R-25J |
| A52R11 | 0683-2045 | 5 | 2 | RESISTOR 200K 5% .25W CF TC=0-800 | 77902 | R-25J |
| A52R12 | 0683-1045 | 3 | 2 | RESISTOR 100K 5% .25W CF TC=0-400 | 77902 | R-25J |
| A52R13 | 0683-1045 | 3 | | RESISTOR 100K 5% .25W CF TC=0-400 | 77902 | R-25J |
| A52R14 | 0683-4725 | 2 | 4 | RESISTOR 4.7K 5% .25W CF TC=0-400 | 77902 | R-25J |
| A52R15 | 0683-2045 | 5 | | RESISTOR 200K 5% .25W CF TC=0-800 | 77902 | R-25J |
| A52R16 | 0683-3315 | 4 | 2 | RESISTOR 330 5% .25W CF TC=0-400 | 77902 | R-25J |
| A52R17 | 0683-1015 | 7 | 2 | RESISTOR 100 5% .25W CF TC=0-400 | 77902 | R-25J |
| A52R18 | 0683-3925 | 2 | 1 | RESISTOR 3.9K 5% .25W CF TC=0-400 | 77902 | R-25J |
| A52R19 | 0683-3325 | 6 | 2 | RESISTOR 3.3K 5% .25W CF TC=0-400 | 77902 | R-25J |
| A52R21 | 0699-0195 | 5 | 1 | RESISTOR 47.5 1% .25W F TC=0+-100 | 12482P01 | FP55D |
| A52R22 | 0683-1035 | 1 | 2 | RESISTOR 10K 5% .25W CF TC=0-400 | 77902 | R-25J |
| A52R24 | 0683-2025 | 1 | 2 | RESISTOR 2K 5% .25W CF TC=0-400 | 77902 | R-25J |
| A52R25 | 0683-2035 | 3 | 5 | RESISTOR 20K 5% .25W CF TC=0-400 | 77902 | R-25J |
| A52R26 | 0683-1035 | 1 | | RESISTOR 10K 5% .25W CF TC=0-400 | 77902 | R-25J |
| A52R27 | 0683-1255 | 7 | 1 | RESISTOR 1.2M 5% .25W CF TC=0-900 | 77902 | R-25J |
| A52R28 | 0757-0445 | 2 | 1 | RESISTOR 13K 1% .125W F TC=0+-100 | 19701 | SFR25H |
| A52R29 | 0698-4123 | 5 | 1 | RESISTOR 499 1% .125W F TC=0+-100 | 19701 | SFR25H |
| A52R30 | 0683-3325 | 6 | | RESISTOR 3.3K 5% .25W CF TC=0-400 | 77902 | R-25J |
| A52R31 | 0683-2025 | 1 | | RESISTOR 2K 5% .25W CF TC=0-400 | 77902 | R-25J |
| A52R32 | 0757-0277 | 8 | 1 | RESISTOR 49.9 1% .125W F TC=0+-100 | 19701 | SFR25H |
| A52R33 | 0757-0411 | 2 | 1 | RESISTOR 332 1% .125W F TC=0+-100 | 19701 | SFR25H |
| A52R34 | 0683-2035 | 3 | | RESISTOR 20K 5% .25W CF TC=0-400 | 77902 | R-25J |
| A52R35 | 0683-2035 | 3 | | RESISTOR 20K 5% .25W CF TC=0-400 | 77902 | R-25J |
| A52R36 | 0683-1505 | 0 | | RESISTOR 15 5% .25W CF TC=0-400 | 77902 | R-25J |
| A52R37 | 0683-2035 | 3 | | RESISTOR 20K 5% .25W CF TC=0-400 | 77902 | R-25J |
| A52R38 | 0683-2035 | 3 | | RESISTOR 20K 5% .25W CF TC=0-400 | 77902 | R-25J |
| A52R39 | 0698-4421 | 6 | 2 | RESISTOR 249 1% .125W F TC=0+-100 | 91637 | CMF-55-1, T-1 |
| A52R42 | 0698-4421 | 6 | | RESISTOR 249 1% .125W F TC=0+-100 | 91637 | CMF-55-1, T-1 |
| A52R43 | 0683-2415 | 3 | 1 | RESISTOR 240 5% .25W CF TC=0-400 | 77902 | R-25J |
| A52R44 | 0683-5105 | 4 | 13 | RESISTOR 51 5% .25W CF TC=0-400 | 77902 | R-25J |
| A52R45 | 0683-5105 | 4 | | RESISTOR 51 5% .25W CF TC=0-400 | 77902 | R-25J |
| A52R46 | 0683-4715 | 0 | 3 | RESISTOR 470 5% .25W CF TC=0-400 | 77902 | R-25J |
| A52R47 | 0683-2215 | 1 | 1 | RESISTOR 220 5% .25W CF TC=0-400 | 77902 | R-25J |
| A52R48 | 0683-5105 | 4 | | RESISTOR 51 5% .25W CF TC=0-400 | 77902 | R-25J |
| A52R49 | 0683-5105 | 4 | | RESISTOR 51 5% .25W CF TC=0-400 | 77902 | R-25J |
| A52R50 | 0683-1335 | 4 | 1 | RESISTOR 13K 5% .25W CF TC=0-400 | 77902 | R-25J |
| A52R51 | 0683-4725 | 2 | | RESISTOR 4.7K 5% .25W CF TC=0-400 | 77902 | R-25J |
| A52R52 | 0683-4715 | 0 | | RESISTOR 470 5% .25W CF TC=0-400 | 77902 | R-25J |
| A52R53 | 0683-4715 | 0 | | RESISTOR 470 5% .25W CF TC=0-400 | 77902 | R-25J |
| A52R54 | 0683-5105 | 4 | | RESISTOR 51 5% .25W CF TC=0-400 | 77902 | R-25J |
| A52R55 | 0683-5105 | 4 | | RESISTOR 51 5% .25W CF TC=0-400 | 77902 | R-25J |
| A52R56 | 0683-5105 | 4 | | RESISTOR 51 5% .25W CF TC=0-400 | 77902 | R-25J |
| A52R57 | 0683-4725 | 2 | | RESISTOR 4.7K 5% .25W CF TC=0-400 | 77902 | R-25J |
| A52R58 | 0683-2425 | 5 | 1 | RESISTOR 2.4K 5% .25W CF TC=0-400 | 77902 | R-25J |
| A52R59 | 0757-0398 | 4 | 2 | RESISTOR 75 1% .125W F TC=0+-100 | 19701 | SFR25H |
| A52R60 | 0757-0398 | 4 | | RESISTOR 75 1% .125W F TC=0+-100 | 19701 | SFR25H |
| A52R61 | 0683-3315 | 4 | | RESISTOR 330 5% .25W CF TC=0-400 | 77902 | R-25J |
| A52R62 | 0757-0394 | 0 | 1 | RESISTOR 51.1 1% .125W F TC=0+-100 | 19701 | SFR25H |
| A52R63 | 0757-0284 | 7 | 1 | RESISTOR 150 1% .125W F TC=0+-100 | 19701 | SFR25H |
| A52R64 | 0757-0407 | 6 | 1 | RESISTOR 200 1% .125W F TC=0+-100 | 19701 | SFR25H |
| A52R65 | 0757-0440 | 7 | 1 | RESISTOR 7.5K 1% .125W F TC=0+-100 | 19701 | SFR25H |
| A52R66 | 0683-5105 | 4 | | RESISTOR 51 5% .25W CF TC=0-400 | 77902 | R-25J |
| A52R67 | 0698-4125 | 7 | 1 | RESISTOR 953 1% .125W F TC=0+-100 | 19701 | SFR25H |
| A52R68 | 2100-3207 | 1 | 1 | RESISTOR-TRMR 5K 10% C SIDE-ADJ 1-TRN | 32997 | 3386X-Y46-502 |
| A52R69 | 0683-5105 | 4 | | RESISTOR 51 5% .25W CF TC=0-400 | 77902 | R-25J |

See introduction to this section for ordering information
* Indicates one of several possible values installed

# Table 9-3. Replaceable Parts

| Reference Designation | HP Part Number | C D | Qty. | Description | Mfr. Code | Mfr. Part Number |
|---|---|---|---|---|---|---|
| A52R70 | 0757-0427 | 0 | 2 | RESISTOR 1.5K 1% .125W F TC=0+-100 | 19701 | SFR25H |
| A52R71 | 0757-0427 | 0 | | RESISTOR 1.5K 1% .125W F TC=0+-100 | 19701 | SFR25H |
| A52R72 | 0683-2015 | 9 | 1 | RESISTOR 200 5% .25W CF TC=0-400 | 77902 | R-25J |
| A52R73 | 0683-5105 | 4 | | RESISTOR 51 5% .25W CF TC=0-400 | 77902 | R-25J |
| A52R74 | 0683-1015 | 7 | | RESISTOR 100 5% .25W CF TC=0-400 | 77902 | R-25J |
| A52R75 | 0683-4725 | 2 | | RESISTOR 4.7K 5% .25W CF TC=0-400 | 77902 | R-25J |
| A52R76 | 0683-5105 | 4 | | RESISTOR 51 5% .25W CF TC=0-400 | 77902 | R-25J |
| A52R77 | 0683-5105 | 4 | | RESISTOR 51 5% .25W CF TC=0-400 | 77902 | R-25J |
| A52R78 | 0683-1525 | 4 | | RESISTOR 1.5K 5% .25W CF TC=0-400 | 77902 | R-25J |
| A52R79 | 0683-1525 | 4 | | RESISTOR 1.5K 5% .25W CF TC=0-400 | 77902 | R-25J |
| A52R85 | 0683-4705 | 8 | 1 | RESISTOR 47 5% .25W CF TC=0-400 | 77902 | R-25J |
| A52R94 | 0683-3615 | 7 | 1 | RESISTOR 360 5% .25W CF TC=0-400 | 77902 | R-25J |
| A52R100 | 0683-5105 | 4 | | RESISTOR 51 5% .25W CF TC=0-400 | 77902 | R-25J |
| A52T1 | 08552-6044 | 1 | 2 | XFC TOROID BAL | 28480 | 08552-6044 |
| A52T2 | 08552-6044 | 1 | | XFC TOROID BAL | 28480 | 08552-6044 |
| A52U2 | 1826-0759 | 9 | 1 | IC COMPARATOR GP QUAD 14-DIP-C PKG | 27014 | |
| A52U3 | 1826-0111 | 7 | 1 | IC OP AMP GP DUAL TO-99 PKG | 04713 | |
| A52U4 | 1858-0004 | 4 | 1 | TRANSISTOR ARRAY 12-PIN MET TO-101 | 04550P03 | |
| | 4330-0496 | 3 | 8 | INSULATOR-BEAD GLASS | 53101 | KG12 |
| | 7121-4611 | 2 | 1 | LABEL-INFORMATION .15-IN-WD .6-IN-LG | 28480 | L01003 |
| **A53** | **03585-66553** | **4** | **1** | **100.35 MHZ VCO (P/O A52) PC BD** | **28480** | **03585-66553** |
| A53C45 | 0160-3847 | 9 | 5 | CAPACITOR-FXD .01UF +100-0% 50VDC CER | 04222 | SA105C103KAA |
| A53C46 | 0160-3847 | 9 | | CAPACITOR-FXD .01UF +100-0% 50VDC CER | 04222 | SA105C103KAA |
| A53C47 | 0160-3847 | 9 | | CAPACITOR-FXD .01UF +100-0% 50VDC CER | 04222 | SA105C103KAA |
| A53C48 | 0160-3847 | 9 | | CAPACITOR-FXD .01UF +100-0% 50VDC CER | 04222 | SA105C103KAA |
| A53C49 | 0160-6872 | 6 | 1 | C-F 13PF 5% 500V CERTBr | 59660 | 301 089 COG0 130J |
| A53C50 | 0121-0059 | 7 | 1 | CAPACITOR-V TRMR-CER 2-8PF 350V PC-MTG | 52763 | 304324 2/8PF NPO |
| A53C51 | 0160-4283 | 9 | 1 | CAPACITOR-FXD 100PF +-5% 200VDC CER | 28480 | RPE110C0G101J200V |
| A53C52 | 0160-4792 | 5 | 1 | CAPACITOR-FXD 8.2PF +-.5PF 100VDC CER | 04222 | MA101A8R2DAA |
| A53C53 | 0160-3456 | 6 | 1 | CAPACITOR-FXD 1000PF +-10% 1KVDC CER | 59660 | 808-542 X5E 102K |
| A53C54 | 0160-3847 | 9 | | CAPACITOR-FXD .01UF +100-0% 50VDC CER | 04222 | SA105C103KAA |
| A53C55 | 0160-6870 | 4 | 1 | C-F 8.2PF --% 500V CERTBr | 59660 | 301 089 COH0 829C |
| A53C56 | 0160-6850 | 0 | 1 | C-F 24F 5% 500V CERTBr | 59660 | 301 089 COG0 240J |
| A53CR5 | 0122-0333 | 2 | 1 | DIODE-VVC 29PF 10% C3/C10-MIN=2.1 | 10978P01 | |
| A53E20 | 9170-0894 | 0 | 1 | CORE-SHIELDING BEAD | 02114 | 56-590-65/4A6 |
| A53J5 | 1251-5204 | 0 | 1 | CONN-POST TYPE .100-PIN-SPCG 6-CONT | 27264 | 22-17-2062 |
| A53L24 | 9100-2247 | 4 | 1 | INDUCTOR RF-CH-MLD 100NH 10% .105DX.26LG24226 | 24226 | 10M100K |
| A53L25 | 9100-3807 | 4 | 1 | INDUCTOR RF-CH-MLD 110NH 5% .166DX.385LG24226 | 24226 | 15M110J |
| A53Q18 | 1853-0354 | 7 | 2 | TRANSISTOR PNP SI TO-92 PD=350MW | 04713 | |
| A53Q19 | 1854-0485 | 7 | 1 | TRANSISTOR NPN SI TO-104 PD=175MW | 04713 | |
| A53Q20 | 1853-0354 | 7 | | TRANSISTOR PNP SI TO-92 PD=350MW | 04713 | |
| A53R22 | 0683-2015 | 9 | 2 | RESISTOR 200 5% .25W CF TC=0-400 | 77902 | R-25J |
| A53R23 | 0683-2015 | 9 | | RESISTOR 200 5% .25W CF TC=0-400 | 77902 | R-25J |
| A53R47 | 0683-1015 | 7 | 2 | RESISTOR 100 5% .25W CF TC=0-400 | 77902 | R-25J |
| A53R81 | 0683-1015 | 7 | | RESISTOR 100 5% .25W CF TC=0-400 | 77902 | R-25J |
| A53R82 | 0683-4725 | 2 | 8 | RESISTOR 4.7K 5% .25W CF TC=0-400 | 77902 | R-25J |
| A53R83 | 0683-1535 | 6 | 1 | RESISTOR 15K 5% .25W CF TC=0-400 | 77902 | R-25J |
| A53R84 | 0683-4725 | 2 | | RESISTOR 4.7K 5% .25W CF TC=0-400 | 77902 | R-25J |
| A53R85 | 0683-2415 | 3 | 1 | RESISTOR 240 5% .25W CF TC=0-400 | 77902 | R-25J |
| A53R86 | 0683-4725 | 2 | | RESISTOR 4.7K 5% .25W CF TC=0-400 | 77902 | R-25J |
| A53R87 | 0683-4725 | 2 | | RESISTOR 4.7K 5% .25W CF TC=0-400 | 77902 | R-25J |
| A53R88 | 0683-4725 | 2 | | RESISTOR 4.7K 5% .25W CF TC=0-400 | 77902 | R-25J |
| A53R89 | 0683-5105 | 4 | 2 | RESISTOR 51 5% .25W CF TC=0-400 | 77902 | R-25J |
| A53R90 | 0683-4725 | 2 | | RESISTOR 4.7K 5% .25W CF TC=0-400 | 77902 | R-25J |
| A53R91 | 0683-4725 | 2 | | RESISTOR 4.7K 5% .25W CF TC=0-400 | 77902 | R-25J |
| A53R92 | 0683-4725 | 2 | | RESISTOR 4.7K 5% .25W CF TC=0-400 | 77902 | R-25J |
| A53R93 | 0683-5105 | 4 | | RESISTOR 51 5% .25W CF TC=0-400 | 77902 | R-25J |
| | 7121-4611 | 2 | 1 | LABEL-INFORMATION .15-IN-WD .6-IN-LG | 28480 | L01003 |
| **A67** | **03585-66567** | **0** | **1** | **XYZ PC BD ASSEMBLY** | **28480** | **03585-66567** |
| A67C1 | 0150-0012 | 3 | 21 | CAPACITOR-FXD .01UF +-20% 1KVDC CER | 59660 | 818-584 Z5U 103M |
| A67C2 | 0150-0012 | 3 | | CAPACITOR-FXD .01UF +-20% 1KVDC CER | 59660 | 818-584 Z5U 103M |
| A67C3 | 0160-6509 | 6 | 2 | C-F .1UF --% 100V CERMLr | 28480 | RPE122-977Z5U104Z100V |
| A67C4 | 0150-0012 | 3 | | CAPACITOR-FXD .01UF +-20% 1KVDC CER | 59660 | 818-584 Z5U 103M |
| A67C6 | 0180-0269 | 5 | 2 | CAPACITOR-FXD 1UF+50-10% 150VDC AL | 13606 | 30D406F150BA2-DSM |

See introduction to this section for ordering information
* Indicates one of several possible values installed

# Table 9-3. Replaceable Parts

| Reference Designation | HP Part Number | C D | Qty. | Description | Mfr. Code | Mfr. Part Number |
|---|---|---|---|---|---|---|
| A67C8 | 0160-3847 | 9 | 15 | CAPACITOR-FXD .01UF +100-0% 50VDC CER | 04222 | SA105C103KAA |
| A67C10 | 0160-3847 | 9 | | CAPACITOR-FXD .01UF +100-0% 50VDC CER | 04222 | SA105C103KAA |
| A67C11 | 0160-3847 | 9 | | CAPACITOR-FXD .01UF +100-0% 50VDC CER | 04222 | SA105C103KAA |
| A67C12 | 0150-0012 | 3 | | CAPACITOR-FXD .01UF +-20% 1KVDC CER | 59660 | 818-584 Z5U 103M |
| A67C13 | 0150-0012 | 3 | | CAPACITOR-FXD .01UF +-20% 1KVDC CER | 59660 | 818-584 Z5U 103M |
| A67C14 | 0180-0269 | 5 | | CAPACITOR-FXD 1UF+50-10% 150VDC AL | 13606 | 30D406F150BA2-DSM |
| A67C16 | 0180-0197 | 8 | 5 | CAPACITOR-FXD 2.2UF+-10% 20VDC TA | 13606 | 150D225X9020A2-DYS |
| A67C17 | 0160-6857 | 7 | 1 | C-F 1.2PF --% 500V CERTBr | 59660 | 301 089 COK0 129C |
| A67C18 | 0160-0195 | 4 | 1 | CAPACITOR-FXD 1000PF +-20% 250VAC(RMS) | 59660 | 808-557-Z5UO-102M |
| A67C19 | 0180-0089 | 7 | 2 | CAPACITOR-FXD 10UF+50-10% 150VDC AL | 13606 | 30D106F150DD2-DSM |
| A67C20 | 0160-0164 | 7 | 1 | CAPACITOR-FXD .039UF +-10% 200VDC POLYE | 15766 | HEW-238M |
| A67C21 | 0160-6509 | 6 | | C-F .1UF --% 100V CERMLr | 28480 | RPE122-977Z5U104Z100V |
| A67C22 | 0160-0166 | 9 | 1 | CAPACITOR-FXD .068UF +-10% 200VDC POLYE | 15766 | HEW-238M |
| A67C23 | 0180-0141 | 2 | 1 | CAPACITOR-FXD 50UF+75-10% 50VDC AL | 13606 | 30D506G050DD2-DSM |
| A67C24 | 0180-0229 | 7 | 2 | CAPACITOR-FXD 33UF+-10% 10VDC TA | 13606 | 150D336X9010B2-DYS |
| A67C25 | 0150-0012 | 3 | | CAPACITOR-FXD .01UF +-20% 1KVDC CER | 59660 | 818-584 Z5U 103M |
| A67C26 | 0150-0012 | 3 | | CAPACITOR-FXD .01UF +-20% 1KVDC CER | 59660 | 818-584 Z5U 103M |
| A67C27 | 0150-0012 | 3 | | CAPACITOR-FXD .01UF +-20% 1KVDC CER | 59660 | 818-584 Z5U 103M |
| A67C28 | 0180-0197 | 8 | | CAPACITOR-FXD 2.2UF+-10% 20VDC TA | 13606 | 150D225X9020A2-DYS |
| A67C29 | 0160-6856 | 6 | 4 | C-F .75PF --% 500V CERTB | 59660 | 301 089 COK0 758C |
| A67C30 | 0150-0012 | 3 | | CAPACITOR-FXD .01UF +-20% 1KVDC CER | 59660 | 818-584 Z5U 103M |
| A67C31 | 0150-0012 | 3 | | CAPACITOR-FXD .01UF +-20% 1KVDC CER | 59660 | 818-584 Z5U 103M |
| A67C32 | 0150-0012 | 3 | | CAPACITOR-FXD .01UF +-20% 1KVDC CER | 59660 | 818-584 Z5U 103M |
| A67C33 | 0180-0197 | 8 | | CAPACITOR-FXD 2.2UF+-10% 20VDC TA | 13606 | 150D225X9020A2-DYS |
| A67C34 | 0160-6856 | 6 | | C-F .75PF --% 500V CERTB | 59660 | 301 089 COK0 758C |
| A67C35 | 0180-0229 | 7 | | CAPACITOR-FXD 33UF+-10% 10VDC TA | 13606 | 150D336X9010B2-DYS |
| A67C36 | 0150-0012 | 3 | | CAPACITOR-FXD .01UF +-20% 1KVDC CER | 59660 | 818-584 Z5U 103M |
| A67C37 | 0150-0012 | 3 | | CAPACITOR-FXD .01UF +-20% 1KVDC CER | 59660 | 818-584 Z5U 103M |
| A67C38 | 0150-0012 | 3 | | CAPACITOR-FXD .01UF +-20% 1KVDC CER | 59660 | 818-584 Z5U 103M |
| A67C39 | 0180-0197 | 8 | | CAPACITOR-FXD 2.2UF+-10% 20VDC TA | 13606 | 150D225X9020A2-DYS |
| A67C40 | 0160-6856 | 6 | | C-F .75PF --% 500V CERTB | 59660 | 301 089 COK0 758C |
| A67C41 | 0150-0012 | 3 | | CAPACITOR-FXD .01UF +-20% 1KVDC CER | 59660 | 818-584 Z5U 103M |
| A67C42 | 0150-0012 | 3 | | CAPACITOR-FXD .01UF +-20% 1KVDC CER | 59660 | 818-584 Z5U 103M |
| A67C43 | 0150-0012 | 3 | | CAPACITOR-FXD .01UF +-20% 1KVDC CER | 59660 | 818-584 Z5U 103M |
| A67C44 | 0180-0197 | 8 | | CAPACITOR-FXD 2.2UF+-10% 20VDC TA | 13606 | 150D225X9020A2-DYS |
| A67C45 | 0160-6856 | 6 | | C-F .75PF --% 500V CERTB | 59660 | 301 089 COK0 758C |
| A67C46 | 0180-0089 | 7 | | CAPACITOR-FXD 10UF+50-10% 150VDC AL | 13606 | 30D106F150DD2-DSM |
| A67C47 | 0160-3847 | 9 | | CAPACITOR-FXD .01UF +100-0% 50VDC CER | 04222 | SA105C103KAA |
| A67C48 | 0160-3847 | 9 | | CAPACITOR-FXD .01UF +100-0% 50VDC CER | 04222 | SA105C103KAA |
| A67C49 | 0160-3847 | 9 | | CAPACITOR-FXD .01UF +100-0% 50VDC CER | 04222 | SA105C103KAA |
| A67C50 | 0160-3847 | 9 | | CAPACITOR-FXD .01UF +100-0% 50VDC CER | 04222 | SA105C103KAA |
| A67C51 | 0150-0012 | 3 | | CAPACITOR-FXD .01UF +-20% 1KVDC CER | 59660 | 818-584 Z5U 103M |
| A67C52 | 0160-3847 | 9 | | CAPACITOR-FXD .01UF +100-0% 50VDC CER | 04222 | SA105C103KAA |
| A67C53 | 0160-3847 | 9 | | CAPACITOR-FXD .01UF +100-0% 50VDC CER | 04222 | SA105C103KAA |
| A67C54 | 0150-0012 | 3 | | CAPACITOR-FXD .01UF +-20% 1KVDC CER | 59660 | 818-584 Z5U 103M |
| A67C55 | 0160-0161 | 4 | 1 | CAPACITOR-FXD .01UF +-10% 200VDC POLYE | 15766 | HEW-238M |
| A67C64 | 0150-0012 | 3 | | CAPACITOR-FXD .01UF +-20% 1KVDC CER | 59660 | 818-584 Z5U 103M |
| A67C65 | 0160-3847 | 9 | | CAPACITOR-FXD .01UF +100-0% 50VDC CER | 04222 | SA105C103KAA |
| A67C66 | 0160-3847 | 9 | | CAPACITOR-FXD .01UF +100-0% 50VDC CER | 04222 | SA105C103KAA |
| A67C67 | 0160-3847 | 9 | | CAPACITOR-FXD .01UF +100-0% 50VDC CER | 04222 | SA105C103KAA |
| A67C68 | 0160-3847 | 9 | | CAPACITOR-FXD .01UF +100-0% 50VDC CER | 04222 | SA105C103KAA |
| A67C69 | 0160-3847 | 9 | | CAPACITOR-FXD .01UF +100-0% 50VDC CER | 04222 | SA105C103KAA |
| A67C70 | 0160-3847 | 9 | | CAPACITOR-FXD .01UF +100-0% 50VDC CER | 04222 | SA105C103KAA |
| A67C71 | 0180-0195 | 6 | 2 | CAPACITOR-FXD .33UF+-20% 35VDC TA | 13606 | 150D334X0035A2-DYS |
| A67C72 | 0180-0195 | 6 | | CAPACITOR-FXD .33UF+-20% 35VDC TA | 13606 | 150D334X0035A2-DYS |
| A67C73 | 0180-0291 | 3 | 2 | CAPACITOR-FXD 1UF+-10% 35VDC TA | 13606 | 150D105X9035A2-DYS |
| A67C74 | 0180-0291 | 3 | | CAPACITOR-FXD 1UF+-10% 35VDC TA | 13606 | 150D105X9035A2-DYS |
| A67C75 | 0150-0012 | 3 | | CAPACITOR-FXD .01UF +-20% 1KVDC CER | 59660 | 818-584 Z5U 103M |
| A67CR1 | 1902-3237 | 6 | 2 | DIODE-ZNR 20V 5% DO-35 PD=.4W TC=+.073% | 04713 | |
| A67CR2 | 1902-3311 | 7 | 3 | DIODE-ZNR 38.3V 5% DO-35 PD=.4W | 04713 | |
| A67CR3 | 1902-3311 | 7 | | DIODE-ZNR 38.3V 5% DO-35 PD=.4W | 04713 | |
| A67CR4 | 1901-0096 | 7 | 1 | DIODE-SWITCHING 120V 50MA 100NS | 9N171 | |
| A67CR5 | 1902-3237 | 6 | | DIODE-ZNR 20V 5% DO-35 PD=.4W TC=+.073% | 04713 | |
| A67CR6 | 1901-0050 | 3 | 3 | DIODE-SWITCHING 80V 200MA 2NS DO-35 | 9N171 | |
| A67CR8 | 1902-0049 | 2 | 10 | DIODE-ZNR 6.19V 5% DO-35 PD=.4W | 04713 | |

See introduction to this section for ordering information
* Indicates one of several possible values installed

# Table 9-3. Replaceable Parts

| Reference Designation | HP Part Number | C D | Qty. | Description | Mfr. Code | Mfr. Part Number |
|---|---|---|---|---|---|---|
| A67CR10 | 1902-3193 | 3 | 1 | DIODE-ZNR 13.3V 5% DO-35 PD=.4W | 04713 | |
| A67CR11 | 1902-0049 | 2 | | DIODE-ZNR 6.19V 5% DO-35 PD=.4W | 04713 | |
| A67CR12 | 1902-0934 | 4 | 1 | DIODE-ZNR 1N5380B 120V 5% DO-29 PD=5W | 04713 | |
| A67CR13 | 1902-3311 | 7 | | DIODE-ZNR 38.3V 5% DO-35 PD=.4W | 04713 | |
| A67CR14 | 1902-0049 | 2 | | DIODE-ZNR 6.19V 5% DO-35 PD=.4W | 04713 | |
| A67CR15 | 1902-0049 | 2 | | DIODE-ZNR 6.19V 5% DO-35 PD=.4W | 04713 | |
| A67CR16 | 1901-0050 | 3 | | DIODE-SWITCHING 80V 200MA 2NS DO-35 | 9N171 | |
| A67CR17 | 1901-0050 | 3 | | DIODE-SWITCHING 80V 200MA 2NS DO-35 | 9N171 | |
| A67CR18 | 1901-0029 | 6 | 3 | DIODE-PWR RECT 600V 750MA DO-29 | 04713 | |
| A67CR19 | 1901-0029 | 6 | | DIODE-PWR RECT 600V 750MA DO-29 | 04713 | |
| A67CR20 | 1902-0049 | 2 | | DIODE-ZNR 6.19V 5% DO-35 PD=.4W | 04713 | |
| A67CR21 | 1902-0049 | 2 | | DIODE-ZNR 6.19V 5% DO-35 PD=.4W | 04713 | |
| A67CR22 | 1902-0049 | 2 | | DIODE-ZNR 6.19V 5% DO-35 PD=.4W | 04713 | |
| A67CR23 | 1902-0049 | 2 | | DIODE-ZNR 6.19V 5% DO-35 PD=.4W | 04713 | |
| A67CR24 | 1902-0049 | 2 | | DIODE-ZNR 6.19V 5% DO-35 PD=.4W | 04713 | |
| A67CR25 | 1902-0049 | 2 | | DIODE-ZNR 6.19V 5% DO-35 PD=.4W | 04713 | |
| A67CR26 | 1902-3301 | 5 | 2 | DIODE-ZNR 34.8V 5% DO-35 PD=.4W | 04713 | |
| A67CR27 | 1902-3301 | 5 | | DIODE-ZNR 34.8V 5% DO-35 PD=.4W | 04713 | |
| A67CR29 | 1901-0029 | 6 | | DIODE-PWR RECT 600V 750MA DO-29 | 04713 | |
| A67F1 | 2110-0001 | 8 | 1 | FUSE 1A 250V NTD 1.25X.25 UL | 75915 | 312 001 |
| A67H1 | 0340-0566 | 5 | 2 | INSULATOR-XSTR THRM-CNDCT | 55285 | 7403-09FR-10 |
| A67H2 | 0340-0566 | 5 | | INSULATOR-XSTR THRM-CNDCT | 55285 | 7403-09FR-10 |
| A67H13 | 0403-0029 | 9 | 2 | BUMPER FOOT-SCR .5-IN-MAX-OD.25-IN-THK | 28480 | 0403-0029 |
| A67H14 | 0403-0029 | 9 | | BUMPER FOOT-SCR .5-IN-MAX-OD.25-IN-THK | 28480 | 0403-0029 |
| A67H15 | 0590-1054 | 7 | 4 | THREADED INSERT-NUT 6-32 .065-IN-LG SST | 46384 | KFS2-632 |
| A67H16 | 0590-1054 | 7 | | THREADED INSERT-NUT 6-32 .065-IN-LG SST | 46384 | KFS2-632 |
| A67H17 | 0590-1054 | 7 | | THREADED INSERT-NUT 6-32 .065-IN-LG SST | 46384 | KFS2-632 |
| A67H18 | 0590-1054 | 7 | | THREADED INSERT-NUT 6-32 .065-IN-LG SST | 46384 | KFS2-632 |
| A67H26 | 2190-0007 | 2 | 4 | WASHER-LK INTL T NO. 6 .141-IN-ID | 73734 | |
| A67H27 | 2190-0007 | 2 | | WASHER-LK INTL T NO. 6 .141-IN-ID | 73734 | |
| A67H28 | 2190-0007 | 2 | | WASHER-LK INTL T NO. 6 .141-IN-ID | 73734 | |
| A67H29 | 2190-0007 | 2 | | WASHER-LK INTL T NO. 6 .141-IN-ID | 73734 | |
| A67H30 | 2200-0105 | 4 | 2 | SCREW-MACH 4-40 .312-IN-LG PAN-HD-POZI | 83486 | |
| A67H31 | 2200-0105 | 4 | | SCREW-MACH 4-40 .312-IN-LG PAN-HD-POZI | 83486 | |
| A67H32 | 2200-0107 | 6 | 2 | SCREW-MACH 4-40 .375-IN-LG PAN-HD-POZI | 83486 | |
| A67H33 | 2200-0107 | 6 | | SCREW-MACH 4-40 .375-IN-LG PAN-HD-POZI | 83486 | |
| A67H36 | 2360-0117 | 6 | 4 | SCREW-MACH 6-32 .375-IN-LG PAN-HD-POZI | 83486 | |
| A67H37 | 2360-0117 | 6 | | SCREW-MACH 6-32 .375-IN-LG PAN-HD-POZI | 83486 | |
| A67H38 | 2360-0117 | 6 | | SCREW-MACH 6-32 .375-IN-LG PAN-HD-POZI | 83486 | |
| A67H39 | 2360-0117 | 6 | | SCREW-MACH 6-32 .375-IN-LG PAN-HD-POZI | 83486 | |
| A67J2 | 1251-6652 | 4 | 1 | CONN-POST TYPE .100-PIN-SPCG 13-CONT | 22526 | 68000-113 |
| A67J3A | 1251-5618 | 0 | 2 | CONN-POST TYPE .100-PIN-SPCG 8-CONT | 22526 | 68000-108 |
| A67J3B | 1251-5618 | 0 | | CONN-POST TYPE .100-PIN-SPCG 8-CONT | 22526 | 68000-108 |
| A67J4 | 1251-3618 | 6 | 3 | CONN-POST TYPE .156-PIN-SPCG 2-CONT | 27264 | 09-60-1021 |
| A67J5 | 1251-3618 | 6 | | CONN-POST TYPE .156-PIN-SPCG 2-CONT | 27264 | 09-60-1021 |
| A67J6 | 1251-3618 | 6 | | CONN-POST TYPE .156-PIN-SPCG 2-CONT | 27264 | 09-60-1021 |
| A67J11 | 1251-4822 | 6 | 1 | CONN-POST TYPE .100-PIN-SPCG 3-CONT | 27264 | 22-03-2031 |
| A67J11 | 1258-0141 | 8 | 1 | CON-JUMPER REM .025P | 22526 | 65474-004 |
| A67L1 | 9140-0171 | 3 | 1 | INDUCTOR RF-CH-MLD 40UH 10% .296DX.968LG32159 | 32159 | 6-01694 |
| A67L2 | 9100-1641 | 0 | 1 | INDUCTOR RF-CH-MLD 240UH 5% .166DX.385LG99800 | 99800 | 1537-94 |
| A67MP11 | 1205-0247 | 4 | 2 | HEAT SINK TO-66-CS | 13103 | 6165C TOP ONLY |
| A67MP11A | 1205-0085 | 8 | 2 | HEAT SINK TO-66-CS | 13103 | 6166B BASE ONLY |
| A67MP13 | 1205-0247 | 4 | | HEAT SINK TO-66-CS | 13103 | 6165C TOP ONLY |
| A67MP13A | 1205-0085 | 8 | | HEAT SINK TO-66-CS | 13103 | 6166B BASE ONLY |
| A67Q1 | 1854-0215 | 1 | 3 | TRANSISTOR NPN SI PD=350MW FT=300MHZ | 04713 | |
| A67Q2 | 1853-0640 | 4 | 2 | XTR SML1PNP** | 27014 | 6692 |
| A67Q3 | 1853-0640 | 4 | | XTR SML1PNP** | 27014 | 6692 |
| A67Q4 | 1854-0215 | 1 | | TRANSISTOR NPN SI PD=350MW FT=300MHZ | 04713 | |
| A67Q5 | 1853-0036 | 2 | 5 | TRANSISTOR PNP SI PD=310MW FT=250MHZ | 04713 | |
| A67Q6 | 1854-0071 | 7 | 7 | TRANSISTOR NPN SI PD=300MW FT=200MHZ | 13606 | |
| A67Q7 | 1853-0232 | 0 | 5 | TRANSISTOR PNP SI TO-39 PD=1W FT=200MHZ | 04713 | |
| A67Q9 | 1854-0215 | 1 | | TRANSISTOR NPN SI PD=350MW FT=300MHZ | 04713 | |
| A67Q10 | 1854-0039 | 7 | 1 | TRANSISTOR NPN 2N3053S SI TO-39 PD=1W | 04713 | |
| A67Q11 | 1854-0237 | 7 | 1 | TRANSISTOR NPN SI TO-66 PD=20W FT=10MHZ | 04713 | |
| A67Q12 | 1854-0234 | 4 | 1 | TRANSISTOR NPN 2N3440 SI TO-5 PD=1W | 04713 | |

See introduction to this section for ordering information
* Indicates one of several possible values installed

## Table 9-3. Replaceable Parts

| Reference Designation | HP Part Number | C D | Qty. | Description | Mfr. Code | Mfr. Part Number |
|---|---|---|---|---|---|---|
| A67Q13 | 1854-0476 | 6 | 1 | TRANSISTOR NPN 2N3879 SI TO-66 PD=35W | 04550P03 | |
| A67Q14 | 1854-1030 | 0 | 2 | TRANSISTOR-DUAL NPN TO-78 PD=750MW | 04713 | |
| A67Q15 | 1854-0071 | 7 | | TRANSISTOR NPN SI PD=300MW FT=200MHZ | 13606 | |
| A67Q16 | 1853-0036 | 2 | | TRANSISTOR PNP SI PD=310MW FT=250MHZ | 04713 | |
| A67Q17 | 1854-0071 | 7 | | TRANSISTOR NPN SI PD=300MW FT=200MHZ | 13606 | |
| A67Q18 | 1853-0232 | 0 | | TRANSISTOR PNP SI TO-39 PD=1W FT=200MHZ | 04713 | |
| A67Q20 | 1853-0036 | 2 | | TRANSISTOR PNP SI PD=310MW FT=250MHZ | 04713 | |
| A67Q21 | 1854-0071 | 7 | | TRANSISTOR NPN SI PD=300MW FT=200MHZ | 13606 | |
| A67Q22 | 1853-0232 | 0 | | TRANSISTOR PNP SI TO-39 PD=1W FT=200MHZ | 04713 | |
| A67Q24 | 1854-1030 | 0 | | TRANSISTOR-DUAL NPN TO-78 PD=750MW | 04713 | |
| A67Q25 | 1854-0071 | 7 | | TRANSISTOR NPN SI PD=300MW FT=200MHZ | 13606 | |
| A67Q26 | 1853-0036 | 2 | | TRANSISTOR PNP SI PD=310MW FT=250MHZ | 04713 | |
| A67Q27 | 1854-0071 | 7 | | TRANSISTOR NPN SI PD=300MW FT=200MHZ | 13606 | |
| A67Q28 | 1853-0232 | 0 | | TRANSISTOR PNP SI TO-39 PD=1W FT=200MHZ | 04713 | |
| A67Q30 | 1853-0036 | 2 | | TRANSISTOR PNP SI PD=310MW FT=250MHZ | 04713 | |
| A67Q31 | 1854-0071 | 7 | | TRANSISTOR NPN SI PD=300MW FT=200MHZ | 13606 | |
| A67Q32 | 1853-0232 | 0 | | TRANSISTOR PNP SI TO-39 PD=1W FT=200MHZ | 04713 | |
| A67Q35 | 1884-0073 | 2 | 1 | THYRISTOR-SCR TO-5 VRRM=100 | 04713 | |
| A67R1 | 2100-2514 | 1 | 1 | RESISTOR-TRMR 20K 10% C SIDE-ADJ 1-TRN | 73138 | 82PAR20K |
| A67R2 | 2100-3353 | 8 | 1 | RESISTOR-TRMR 20K 10% C SIDE-ADJ 1-TRN | 32997 | 3386X-Y46-203 |
| A67R3 | 2100-3354 | 9 | 2 | RESISTOR-TRMR 50K 10% C SIDE-ADJ 1-TRN | 32997 | 3386X-Y46-503 |
| A67R4 | 0683-5135 | 0 | 1 | RESISTOR 51K 5% .25W CF TC=0-400 | 77902 | R-25J |
| A67R5 | 0683-2225 | 3 | 1 | RESISTOR 2.2K 5% .25W CF TC=0-400 | 77902 | R-25J |
| A67R6 | 2100-3354 | 9 | | RESISTOR-TRMR 50K 10% C SIDE-ADJ 1-TRN | 32997 | 3386X-Y46-503 |
| A67R7 | 0698-3497 | 4 | 3 | RESISTOR 6.04K 1% .125W F TC=0+-100 | 19701 | SFR25H |
| A67R8 | 0698-4510 | 4 | 2 | RESISTOR 84.5K 1% .125W F TC=0+-100 | 91637 | CMF-55-1, T-1 |
| A67R9 | 0683-0275 | 9 | 1 | RESISTOR 2.7 5% .25W CF TC=0-400 | 77902 | R-25J |
| A67R21 | 0683-1015 | 7 | 1 | RESISTOR 100 5% .25W CF TC=0-400 | 77902 | R-25J |
| A67R22 | 0757-0442 | 9 | 1 | RESISTOR 10K 1% .125W F TC=0+-100 | 19701 | SFR25H |
| A67R23 | 0683-2425 | 5 | 1 | RESISTOR 2.4K 5% .25W CF TC=0-400 | 77902 | R-25J |
| A67R24 | 0683-4715 | 0 | 2 | RESISTOR 470 5% .25W CF TC=0-400 | 77902 | R-25J |
| A67R25 | 0698-3279 | 0 | 5 | RESISTOR 4.99K 1% .125W F TC=0+-100 | 19701 | SFR25H |
| A67R26 | 0683-5125 | 8 | 5 | RESISTOR 5.1K 5% .25W CF TC=0-400 | 77902 | R-25J |
| A67R27 | 0757-0437 | 2 | 5 | RESISTOR 4.75K 1% .125W F TC=0+-100 | 19701 | SFR25H |
| A67R28 | 0683-1525 | 4 | 5 | RESISTOR 1.5K 5% .25W CF TC=0-400 | 77902 | R-25J |
| A67R29 | 0757-0346 | 2 | 10 | RESISTOR 10 1% .125W F TC=0+-100 | 91637 | CMF-55-1, T-1 |
| A67R30 | 0757-0346 | 2 | | RESISTOR 10 1% .125W F TC=0+-100 | 91637 | CMF-55-1, T-1 |
| A67R31 | 0757-0190 | 4 | 5 | RESISTOR 20K 1% .5W F TC=0+-100 | 19701 | 5053R |
| A67R32 | 0686-4335 | 6 | 5 | RESISTOR 43K 5% .5W CC TC=0+765 | 01121 | EB4335 |
| A67R33 | 0698-4479 | 4 | 1 | RESISTOR 14K 1% .125W F TC=0+-100 | 91637 | CMF-55-1, T-1 |
| A67R34 | 0698-4471 | 6 | 1 | RESISTOR 7.15K 1% .125W F TC=0+-100 | 91637 | CMF-55-1, T-1 |
| A67R35 | 0764-0005 | 5 | 1 | RESISTOR 10K 5% 2W MO TC=0+-200 | 28480 | GS-3 |
| A67R36 | 0757-0273 | 4 | 2 | RESISTOR 3.01K 1% .125W F TC=0+-100 | 19701 | SFR25H |
| A67R37 | 0686-7535 | 4 | 1 | RESISTOR 75K 5% .5W CC TC=0+765 | 01121 | EB7535 |
| A67R38 | 2100-0558 | 9 | 1 | RESISTOR-TRMR 20K 10% C TOP-ADJ 1-TRN | 32997 | 3386P-Y46-203 |
| A67R39 | 0698-3497 | 4 | | RESISTOR 6.04K 1% .125W F TC=0+-100 | 19701 | SFR25H |
| A67R40 | 0698-3497 | 4 | | RESISTOR 6.04K 1% .125W F TC=0+-100 | 19701 | SFR25H |
| A67R41 | 0686-3005 | 5 | 1 | RESISTOR 30 5% .5W CC TC=0+412 | 01121 | EB3005 |
| A67R42 | 0757-0273 | 4 | | RESISTOR 3.01K 1% .125W F TC=0+-100 | 19701 | SFR25H |
| A67R43 | 0683-1045 | 3 | 1 | RESISTOR 100K 5% .25W CF TC=0-400 | 77902 | R-25J |
| A67R44 | 0698-4536 | 4 | 1 | RESISTOR 340K 1% .125W F TC=0+-100 | 19701 | SFR25H |
| A67R45 | 0757-0467 | 8 | 1 | RESISTOR 121K 1% .125W F TC=0+-100 | 19701 | SFR25H |
| A67R46 | 2100-3253 | 7 | 3 | RESISTOR-TRMR 50K 10% C TOP-ADJ 1-TRN | 32997 | 3386P-Y46-503 |
| A67R47 | 0757-0465 | 6 | 2 | RESISTOR 100K 1% .125W F TC=0+-100 | 19701 | SFR25H |
| A67R48 | 0757-0465 | 6 | | RESISTOR 100K 1% .125W F TC=0+-100 | 19701 | SFR25H |
| A67R49 | 0683-2265 | 1 | 1 | RESISTOR 22M 5% .25W CC TC=-900/+1200 | 01121 | CB2265 |
| A67R50 | 0683-1215 | 9 | 1 | RESISTOR 120 5% .25W CF TC=0-400 | 77902 | R-25J |
| A67R51 | 0757-0479 | 2 | 1 | RESISTOR 392K 1% .125W F TC=0+-100 | 19701 | SFR25H |
| A67R52 | 0683-3915 | 0 | 1 | RESISTOR 390 5% .25W CF TC=0-400 | 77902 | R-25J |
| A67R53 | 0757-0280 | 3 | 7 | RESISTOR 1K 1% .125W F TC=0+-100 | 19701 | SFR25H |
| A67R54 | 2100-3351 | 6 | 2 | RESISTOR-TRMR 500 10% C SIDE-ADJ 1-TRN | 32997 | 3386X-Y46-501 |
| A67R55 | 0757-0280 | 3 | | RESISTOR 1K 1% .125W F TC=0+-100 | 19701 | SFR25H |
| A67R56 | 0757-0280 | 3 | | RESISTOR 1K 1% .125W F TC=0+-100 | 19701 | SFR25H |
| A67R57 | 0757-0280 | 3 | | RESISTOR 1K 1% .125W F TC=0+-100 | 19701 | SFR25H |
| A67R58 | 0757-0431 | 6 | 1 | RESISTOR 2.43K 1% .125W F TC=0+-100 | 19701 | SFR25H |

See introduction to this section for ordering information
* Indicates one of several possible values installed

# Table 9-3. Replaceable Parts

| Reference Designation | HP Part Number | C D | Qty. | Description | Mfr. Code | Mfr. Part Number |
|---|---|---|---|---|---|---|
| A67R59 | 2100-3349 | 2 | 2 | RESISTOR-TRMR 100 10% C SIDE-ADJ 1-TRN | 32997 | 3386X-Y46-101 |
| A67R60 | 0757-0284 | 7 | 2 | RESISTOR 150 1% .125W F TC=0+-100 | 19701 | SFR25H |
| A67R61 | 0757-0428 | 1 | 2 | RESISTOR 1.62K 1% .125W F TC=0+-100 | 19701 | SFR25H |
| A67R62 | 0698-4468 | 1 | 2 | RESISTOR 1.13K 1% .125W F TC=0+-100 | 91637 | CMF-55-1, T-1 |
| A67R63 | 0698-3279 | 0 | | RESISTOR 4.99K 1% .125W F TC=0+-100 | 19701 | SFR25H |
| A67R64 | 0683-5125 | 8 | | RESISTOR 5.1K 5% .25W CF TC=0-400 | 77902 | R-25J |
| A67R65 | 0757-0437 | 2 | | RESISTOR 4.75K 1% .125W F TC=0+-100 | 19701 | SFR25H |
| A67R66 | 0683-1525 | 4 | | RESISTOR 1.5K 5% .25W CF TC=0-400 | 77902 | R-25J |
| A67R67 | 0757-0346 | 2 | | RESISTOR 10 1% .125W F TC=0+-100 | 91637 | CMF-55-1, T-1 |
| A67R68 | 0686-4335 | 6 | | RESISTOR 43K 5% .5W CC TC=0+765 | 01121 | EB4335 |
| A67R69 | 0757-0346 | 2 | | RESISTOR 10 1% .125W F TC=0+-100 | 91637 | CMF-55-1, T-1 |
| A67R70 | 0757-0190 | 4 | | RESISTOR 20K 1% .5W F TC=0+-100 | 19701 | 5053R |
| A67R71 | 0698-3279 | 0 | | RESISTOR 4.99K 1% .125W F TC=0+-100 | 19701 | SFR25H |
| A67R72 | 0683-5125 | 8 | | RESISTOR 5.1K 5% .25W CF TC=0-400 | 77902 | R-25J |
| A67R73 | 0757-0437 | 2 | | RESISTOR 4.75K 1% .125W F TC=0+-100 | 19701 | SFR25H |
| A67R74 | 0683-1525 | 4 | | RESISTOR 1.5K 5% .25W CF TC=0-400 | 77902 | R-25J |
| A67R75 | 0757-0346 | 2 | | RESISTOR 10 1% .125W F TC=0+-100 | 91637 | CMF-55-1, T-1 |
| A67R76 | 0686-4335 | 6 | | RESISTOR 43K 5% .5W CC TC=0+765 | 01121 | EB4335 |
| A67R78 | 0757-0346 | 2 | | RESISTOR 10 1% .125W F TC=0+-100 | 91637 | CMF-55-1, T-1 |
| A67R79 | 0757-0190 | 4 | | RESISTOR 20K 1% .5W F TC=0+-100 | 19701 | 5053R |
| A67R80 | 2100-3351 | 6 | | RESISTOR-TRMR 500 10% C SIDE-ADJ 1-TRN | 32997 | 3386X-Y46-501 |
| A67R81 | 0757-0280 | 3 | | RESISTOR 1K 1% .125W F TC=0+-100 | 19701 | SFR25H |
| A67R82 | 0757-0280 | 3 | | RESISTOR 1K 1% .125W F TC=0+-100 | 19701 | SFR25H |
| A67R83 | 0757-0280 | 3 | | RESISTOR 1K 1% .125W F TC=0+-100 | 19701 | SFR25H |
| A67R84 | 0698-4439 | 6 | 1 | RESISTOR 3.24K 1% .125W F TC=0+-100 | 91637 | CMF-55-1, T-1 |
| A67R85 | 2100-3349 | 2 | | RESISTOR-TRMR 100 10% C SIDE-ADJ 1-TRN | 32997 | 3386X-Y46-101 |
| A67R86 | 0757-0284 | 7 | | RESISTOR 150 1% .125W F TC=0+-100 | 19701 | SFR25H |
| A67R87 | 0757-0428 | 1 | | RESISTOR 1.62K 1% .125W F TC=0+-100 | 19701 | SFR25H |
| A67R88 | 0698-4468 | 1 | | RESISTOR 1.13K 1% .125W F TC=0+-100 | 91637 | CMF-55-1, T-1 |
| A67R89 | 0698-3279 | 0 | | RESISTOR 4.99K 1% .125W F TC=0+-100 | 19701 | SFR25H |
| A67R90 | 0683-5125 | 8 | | RESISTOR 5.1K 5% .25W CF TC=0-400 | 77902 | R-25J |
| A67R91 | 0757-0437 | 2 | | RESISTOR 4.75K 1% .125W F TC=0+-100 | 19701 | SFR25H |
| A67R92 | 0683-1525 | 4 | | RESISTOR 1.5K 5% .25W CF TC=0-400 | 77902 | R-25J |
| A67R93 | 0757-0346 | 2 | | RESISTOR 10 1% .125W F TC=0+-100 | 91637 | CMF-55-1, T-1 |
| A67R94 | 0686-4335 | 6 | | RESISTOR 43K 5% .5W CC TC=0+765 | 01121 | EB4335 |
| A67R95 | 0757-0346 | 2 | | RESISTOR 10 1% .125W F TC=0+-100 | 91637 | CMF-55-1, T-1 |
| A67R96 | 0757-0190 | 4 | | RESISTOR 20K 1% .5W F TC=0+-100 | 19701 | 5053R |
| A67R97 | 0698-3279 | 0 | | RESISTOR 4.99K 1% .125W F TC=0+-100 | 19701 | SFR25H |
| A67R98 | 0683-5125 | 8 | | RESISTOR 5.1K 5% .25W CF TC=0-400 | 77902 | R-25J |
| A67R99 | 0757-0437 | 2 | | RESISTOR 4.75K 1% .125W F TC=0+-100 | 19701 | SFR25H |
| A67R100 | 0683-1525 | 4 | | RESISTOR 1.5K 5% .25W CF TC=0-400 | 77902 | R-25J |
| A67R101 | 0757-0346 | 2 | | RESISTOR 10 1% .125W F TC=0+-100 | 91637 | CMF-55-1, T-1 |
| A67R102 | 0686-4335 | 6 | | RESISTOR 43K 5% .5W CC TC=0+765 | 01121 | EB4335 |
| A67R103 | 0757-0346 | 2 | | RESISTOR 10 1% .125W F TC=0+-100 | 91637 | CMF-55-1, T-1 |
| A67R104 | 0757-0190 | 4 | | RESISTOR 20K 1% .5W F TC=0+-100 | 19701 | 5053R |
| A67R105 | 2100-3253 | 7 | | RESISTOR-TRMR 50K 10% C TOP-ADJ 1-TRN | 32997 | 3386P-Y46-503 |
| A67R106 | 0698-4510 | 4 | | RESISTOR 84.5K 1% .125W F TC=0+-100 | 91637 | CMF-55-1, T-1 |
| A67R107 | 0683-1025 | 9 | 1 | RESISTOR 1K 5% .25W CF TC=0-400 | 77902 | R-25J |
| A67R108 | 0683-4715 | 0 | | RESISTOR 470 5% .25W CF TC=0-400 | 77902 | R-25J |
| A67R110 | 0683-4705 | 8 | 3 | RESISTOR 47 5% .25W CF TC=0-400 | 77902 | R-25J |
| A67R111 | 0757-0407 | 6 | 2 | RESISTOR 200 1% .125W F TC=0+-100 | 19701 | SFR25H |
| A67R112 | 0683-4705 | 8 | | RESISTOR 47 5% .25W CF TC=0-400 | 77902 | R-25J |
| A67R113 | 0757-0407 | 6 | | RESISTOR 200 1% .125W F TC=0+-100 | 19701 | SFR25H |
| A67R114 | 0683-4705 | 8 | | RESISTOR 47 5% .25W CF TC=0-400 | 77902 | R-25J |
| A67R115 | 0683-4725 | 2 | 1 | RESISTOR 4.7K 5% .25W CF TC=0-400 | 77902 | R-25J |
| A67R116 | 2100-3253 | 7 | | RESISTOR-TRMR 50K 10% C TOP-ADJ 1-TRN | 32997 | 3386P-Y46-503 |
| A67TP1 | 0360-0124 | 3 | 9 | CONNECTOR-SGL CONT PIN .04-IN-BSC-SZ RND97300 | 97300 | |
| A67TP2 | 0360-0124 | 3 | | CONNECTOR-SGL CONT PIN .04-IN-BSC-SZ RND97300 | 97300 | |
| A67TP3 | 0360-0124 | 3 | | CONNECTOR-SGL CONT PIN .04-IN-BSC-SZ RND97300 | 97300 | |
| A67TP4 | 0360-0124 | 3 | | CONNECTOR-SGL CONT PIN .04-IN-BSC-SZ RND97300 | 97300 | |
| A67TP5 | 0360-0124 | 3 | | CONNECTOR-SGL CONT PIN .04-IN-BSC-SZ RND97300 | 97300 | |
| A67TP6 | 0360-0124 | 3 | | CONNECTOR-SGL CONT PIN .04-IN-BSC-SZ RND97300 | 97300 | |
| A67TP11 | 0360-0124 | 3 | | CONNECTOR-SGL CONT PIN .04-IN-BSC-SZ RND97300 | 97300 | |
| A67TP12 | 0360-0124 | 3 | | CONNECTOR-SGL CONT PIN .04-IN-BSC-SZ RND97300 | 97300 | |
| A67TP13 | 0360-0124 | 3 | | CONNECTOR-SGL CONT PIN .04-IN-BSC-SZ RND97300 | 97300 | |

See introduction to this section for ordering information
* Indicates one of several possible values installed

## Table 9-3. Replaceable Parts

| Reference Designation | HP Part Number | C D | Qty. | Description | Mfr. Code | Mfr. Part Number |
|---|---|---|---|---|---|---|
| A67U1 | 1826-0512 | 2 | 1 | IC V RGLTR-FXD-POS 14.4/15.6V TO-39 PKG | 04713 | |
| A67U2 | 1826-0167 | 3 | 1 | IC OP AMP PRGMBL TO-99 PKG | 04550P03 | |
| A67U3 | 1820-0196 | 6 | 1 | IC V RGLTR-ADJ-POS 2/37V TO-100 PKG | 27014 | |
| A67U4 | 1826-0511 | 1 | 1 | IC V RGLTR-FXD-NEG 14.4/15.6V TO-39 PKG | 28480 | 1826-0511 |
| A67X1 | 2110-0269 | 0 | 2 | FUSEHOLDER-CLIP TYPE.25D-FUSE | 13060 | |
| | 4330-0496 | 3 | 6 | INSULATOR-BEAD GLASS | 53101 | KG12 |
| | 2260-0009 | 3 | 2 | NUT-HEX-W/LKWR 4-40-THD .094-IN-THK | 73734 | |
| | 7121-4611 | 2 | 1 | LABEL-INFORMATION .15-IN-WD .6-IN-LG | 28480 | L01003 |
| | 2110-0269 | 0 | | FUSEHOLDER-CLIP TYPE.25D-FUSE | 13060 | |
| | 1205-0033 | 6 | 7 | HEAT SINK TO-5/TO-39-CS | 02123P01 | 207-CB |
| | 1205-0033 | 6 | | HEAT SINK TO-5/TO-39-CS | 02123P01 | 207-CB |
| | 1205-0033 | 6 | | HEAT SINK TO-5/TO-39-CS | 02123P01 | 207-CB |
| | 1205-0033 | 6 | | HEAT SINK TO-5/TO-39-CS | 02123P01 | 207-CB |
| | 1205-0033 | 6 | | HEAT SINK TO-5/TO-39-CS | 02123P01 | 207-CB |
| | 1205-0033 | 6 | | HEAT SINK TO-5/TO-39-CS | 02123P01 | 207-CB |
| | 1205-0033 | 6 | | HEAT SINK TO-5/TO-39-CS | 02123P01 | 207-CB |
| **A70** | **03585-66570** | **5** | **1** | **POWER SUPPLY MOTHERBOARD** | **28480** | **03585-66570** |
| A70C1 | 0180-0696 | 2 | 1 | CAPACITOR-FXD 2600UF+50-10% 75VDC AL | 13606 | 602D679-DHX |
| A70C2 | 0180-2318 | 7 | 1 | CAPACITOR-FXD 900UF+50-10% 100VDC AL | 13606 | 36D7816-DQB |
| A70C3 | 0180-0291 | 3 | 5 | CAPACITOR-FXD 1UF+-10% 35VDC TA | 13606 | 150D105X9035A2-DYS |
| A70C4 | 0180-0291 | 3 | | CAPACITOR-FXD 1UF+-10% 35VDC TA | 13606 | 150D105X9035A2-DYS |
| A70C5 | 0180-0291 | 3 | | CAPACITOR-FXD 1UF+-10% 35VDC TA | 13606 | 150D105X9035A2-DYS |
| A70C6 | 0180-0291 | 3 | | CAPACITOR-FXD 1UF+-10% 35VDC TA | 13606 | 150D105X9035A2-DYS |
| A70C7 | 0180-0291 | 3 | | CAPACITOR-FXD 1UF+-10% 35VDC TA | 13606 | 150D105X9035A2-DYS |
| A70CR1 | 1902-1204 | 3 | 2 | DIODE-ZNR 1N2984B 20V 5% DO-4 PD=10W | 04713 | |
| A70CR2 | 1902-1204 | 3 | | DIODE-ZNR 1N2984B 20V 5% DO-4 PD=10W | 04713 | |
| A70CR3 | 1902-0643 | 2 | 1 | DIODE-ZNR 1N2979B 15V 5% DO-4 PD=10W | 04713 | |
| A70CR4 | 1902-1198 | 4 | 1 | DIODE-ZNR 1N2973B 9.1V 5% DO-4 PD=10W | 04713 | |
| A70CR5 | 1902-1217 | 8 | 1 | DIODE-ZNR 6.2V 5% DO-4 PD=10W TC=+.035% | 04713 | |
| A70H1 | 0380-0059 | 5 | 7 | SPACER-RVT-ON .25-IN-LG .152-IN-ID | 00866 | |
| A70H2 | 0380-0059 | 5 | | SPACER-RVT-ON .25-IN-LG .152-IN-ID | 00866 | |
| A70H3 | 0380-0059 | 5 | | SPACER-RVT-ON .25-IN-LG .152-IN-ID | 00866 | |
| A70H4 | 0380-0059 | 5 | | SPACER-RVT-ON .25-IN-LG .152-IN-ID | 00866 | |
| A70H5 | 0380-0059 | 5 | | SPACER-RVT-ON .25-IN-LG .152-IN-ID | 00866 | |
| A70H6 | 0380-0059 | 5 | | SPACER-RVT-ON .25-IN-LG .152-IN-ID | 00866 | |
| A70H7 | 0380-0059 | 5 | | SPACER-RVT-ON .25-IN-LG .152-IN-ID | 00866 | |
| A70H8 | 0380-0741 | 2 | 2 | STANDOFF-RVT-ON .187-IN-LG 6-32-THD | 00866 | |
| A70H9 | 0380-0741 | 2 | | STANDOFF-RVT-ON .187-IN-LG 6-32-THD | 00866 | |
| A70H10 | 0380-1871 | 1 | 5 | SPCR-RD .19ID.38D .25LG BRSNI | 05791 | |
| A70H11 | 0380-1871 | 1 | | SPCR-RD .19ID.38D .25LG BRSNI | 05791 | |
| A70H12 | 0380-1871 | 1 | | SPCR-RD .19ID.38D .25LG BRSNI | 05791 | |
| A70H13 | 0380-1871 | 1 | | SPCR-RD .19ID.38D .25LG BRSNI | 05791 | |
| A70H14 | 0380-1871 | 1 | | SPCR-RD .19ID.38D .25LG BRSNI | 05791 | |
| A70H15 | 0590-1136 | 6 | 5 | THREADED INSERT-NUT 10-32 .125-IN-LG | 46384 | KFS2-032 |
| A70H16 | 0590-1136 | 6 | | THREADED INSERT-NUT 10-32 .125-IN-LG | 46384 | KFS2-032 |
| A70H17 | 0590-1136 | 6 | | THREADED INSERT-NUT 10-32 .125-IN-LG | 46384 | KFS2-032 |
| A70H18 | 0590-1136 | 6 | | THREADED INSERT-NUT 10-32 .125-IN-LG | 46384 | KFS2-032 |
| A70H19 | 0590-1136 | 6 | | THREADED INSERT-NUT 10-32 .125-IN-LG | 46384 | KFS2-032 |
| A70H21 | 2190-0011 | 8 | 9 | WASHER-LK INTL T NO. 10 .195-IN-ID | 73734 | |
| A70H22 | 2190-0011 | 8 | | WASHER-LK INTL T NO. 10 .195-IN-ID | 73734 | |
| A70H23 | 2190-0011 | 8 | | WASHER-LK INTL T NO. 10 .195-IN-ID | 73734 | |
| A70H24 | 2190-0011 | 8 | | WASHER-LK INTL T NO. 10 .195-IN-ID | 73734 | |
| A70H25 | 2190-0011 | 8 | | WASHER-LK INTL T NO. 10 .195-IN-ID | 73734 | |
| A70H26 | 2190-0011 | 8 | | WASHER-LK INTL T NO. 10 .195-IN-ID | 73734 | |
| A70H27 | 2190-0011 | 8 | | WASHER-LK INTL T NO. 10 .195-IN-ID | 73734 | |
| A70H28 | 2190-0011 | 8 | | WASHER-LK INTL T NO. 10 .195-IN-ID | 73734 | |
| A70H29 | 2190-0011 | 8 | | WASHER-LK INTL T NO. 10 .195-IN-ID | 73734 | |
| A70H30 | 2680-0128 | 7 | 4 | SCREW-MACH 10-32 .25-IN-LG PAN-HD-POZI | 83486 | |
| A70H31 | 2680-0128 | 7 | | SCREW-MACH 10-32 .25-IN-LG PAN-HD-POZI | 83486 | |
| A70H32 | 2680-0128 | 7 | | SCREW-MACH 10-32 .25-IN-LG PAN-HD-POZI | 83486 | |
| A70H33 | 2680-0128 | 7 | | SCREW-MACH 10-32 .25-IN-LG PAN-HD-POZI | 83486 | |
| A70H34 | 4330-0952 | 6 | 5 | INSULATOR-BEAD CERAMIC | 25706 | 10-215A |

See introduction to this section for ordering information
* Indicates one of several possible values installed

# Table 9-3. Replaceable Parts

| Reference Designation | HP Part Number | C D | Qty. | Description | Mfr. Code | Mfr. Part Number |
|---|---|---|---|---|---|---|
| A70H35 | 4330-0952 | 6 | | INSULATOR-BEAD CERAMIC | 25706 | 10-215A |
| A70H36 | 4330-0952 | 6 | | INSULATOR-BEAD CERAMIC | 25706 | 10-215A |
| A70H37 | 4330-0952 | 6 | | INSULATOR-BEAD CERAMIC | 25706 | 10-215A |
| A70H38 | 4330-0952 | 6 | | INSULATOR-BEAD CERAMIC | 25706 | 10-215A |
| A70J1 | 1251-5618 | 0 | 1 | CONN-POST TYPE .100-PIN-SPCG 8-CONT | 22526 | 68000-108 |
| A70J2 | 1251-3276 | 2 | 1 | CONN-POST TYPE .156-PIN-SPCG 6-CONT | 27264 | 09-60-1061 |
| A70J3 | 1251-4659 | 7 | 1 | CONN-POST TYPE .156-PIN-SPCG 14-CONT | 27264 | 09-60-1141 |
| A70J4 | 1251-2034 | 8 | 5 | CONNECTOR-PC EDGE 10-CONT/ROW 2-ROWS | 12355P01 | SCM10D/7-1HP |
| A70J5 | 1251-2034 | 8 | | CONNECTOR-PC EDGE 10-CONT/ROW 2-ROWS | 12355P01 | SCM10D/7-1HP |
| A70J6 | 1251-2034 | 8 | | CONNECTOR-PC EDGE 10-CONT/ROW 2-ROWS | 12355P01 | SCM10D/7-1HP |
| A70J7 | 1251-2034 | 8 | | CONNECTOR-PC EDGE 10-CONT/ROW 2-ROWS | 12355P01 | SCM10D/7-1HP |
| A70J8 | 1251-2034 | 8 | | CONNECTOR-PC EDGE 10-CONT/ROW 2-ROWS | 12355P01 | SCM10D/7-1HP |
| A70J9 | 1251-2035 | 9 | 1 | CONNECTOR-PC EDGE 15-CONT/ROW 2-ROWS | 03394P01 | 220-624-03 |
| A70R1 | 0764-0020 | 4 | 2 | RESISTOR 5.6K 5% 2W MO TC=0+-200 | 28480 | GS-3 |
| A70R2 | 0764-0020 | 4 | | RESISTOR 5.6K 5% 2W MO TC=0+-200 | 28480 | GS-3 |
| A70R3 | 0687-1031 | 5 | 1 | RESISTOR 10K 10% .5W CC TC=0+765 | 01121 | EB1031 |
| A70TP1 | 1251-0600 | 0 | 1 | CONNECTOR-SGL CONT PIN 1.14-MM-BSC-SZ SQ27264 | 27264 | 16-06-0034 |
| A70W1 | 8150-4550 | 0 | 1 | JMPR 18GA BLU 50MM 8x8 | 28480 | |
| A70W2 | 8150-4543 | 1 | 2 | JMPR 18GA RED 50MM 8x8 | 28480 | |
| A70W3 | 8150-4783 | 1 | 1 | JMPR 18GA ORN 50MM 8x8 | 28480 | |
| A70W4 | 8150-4543 | 1 | | JMPR 18GA RED 50MM 8x8 | 28480 | |
| A70W5 | 8150-4782 | 0 | 1 | JMPR 18GA BLK 50MM 8x8 | 28480 | |
| | 7121-4611 | 2 | 1 | LABEL-INFORMATION .15-IN-WD .6-IN-LG | 28480 | L01003 |
| **A71** | **03585-66571** | **6** | **1** | **+7.7V POWER SUPPLY PC BD ASSEMBLY** | **28480** | **03585-66571** |
| A71C1 | 0180-2687 | 5 | 1 | CAPACITOR-FXD 47UF+100-10% 100VDC AL | 13606 | 672D128 |
| A71C2 | 0160-6509 | 6 | 4 | C-F .1UF --% 100V CERMLr | 28480 | RPE122-977Z5U104Z100V |
| A71C3 | 0180-2686 | 4 | 1 | CAPACITOR-FXD 470UF+100-10% 25VDC AL | 13606 | 672D129 |
| A71C4 | 0160-3456 | 6 | 3 | CAPACITOR-FXD 1000PF +-10% 1KVDC CER | 59660 | 808-542 X5E 102K |
| A71C5 | 0180-0116 | 1 | 2 | CAPACITOR-FXD 6.8UF+-10% 35VDC TA | 13606 | 150D685X9035B2-DYS |
| A71C6 | 0180-0309 | 4 | 2 | CAPACITOR-FXD 4.7UF+-20% 10VDC TA | 13606 | 150D475X0010A2-DYS |
| A71C7 | 0160-6509 | 6 | | C-F .1UF --% 100V CERMLr | 28480 | RPE122-977Z5U104Z100V |
| A71C8 | 0180-0309 | 4 | | CAPACITOR-FXD 4.7UF+-20% 10VDC TA | 13606 | 150D475X0010A2-DYS |
| A71C9 | 0160-0300 | 3 | 1 | CAPACITOR-FXD 2700PF +-10% 200VDC POLYE | 15766 | HEW-238M |
| A71C10 | 0180-0116 | 1 | | CAPACITOR-FXD 6.8UF+-10% 35VDC TA | 13606 | 150D685X9035B2-DYS |
| A71C11 | 0160-2055 | 9 | 1 | CAPACITOR-FXD .01UF +80-20% 100VDC CER | 59660 | 805-504 Y5V 103Z |
| A71C12 | 0160-3456 | 6 | | CAPACITOR-FXD 1000PF +-10% 1KVDC CER | 59660 | 808-542 X5E 102K |
| A71C13 | 0160-6509 | 6 | | C-F .1UF --% 100V CERMLr | 28480 | RPE122-977Z5U104Z100V |
| A71C14 | 0160-3456 | 6 | | CAPACITOR-FXD 1000PF +-10% 1KVDC CER | 59660 | 808-542 X5E 102K |
| A71C15 | 0160-6509 | 6 | | C-F .1UF --% 100V CERMLr | 28480 | RPE122-977Z5U104Z100V |
| A71CR1 | 1901-0040 | 1 | 1 | DIODE-SWITCHING 30V 50MA 2NS DO-35 | 9N171 | |
| A71CR2 | 1902-0202 | 9 | 1 | DIODE-ZNR 15V 5% PD=1W IR=5UA | 04713 | |
| A71CR3 | 1990-0598 | 1 | 1 | LED-LAMP LUM-INT=800UCD IF=60MA-MAX | 28480 | 1990-0598 |
| A71CR4 | 1901-0026 | 3 | 1 | DIODE-PWR RECT 200V 750MA DO-29 | 04713 | |
| A71CR5 | 1990-0597 | 0 | 1 | LED-LAMP LUM-INT=1MCD IF=60MA-MAX BVR=5V28480 | 28480 | 1990-0597 |
| A71F1 | 2110-0043 | 8 | 1 | FUSE 1.5A 250V NTD 1.25X.25 UL | 75915 | 312 01.5 |
| A71H1 | 03582-01103 | 1 | 1 | SHTF HEAT SINK | 28480 | 03582-01103 |
| A71H3 | 0590-1054 | 7 | 2 | THREADED INSERT-NUT 6-32 .065-IN-LG SST | 46384 | KFS2-632 |
| A71H4 | 0590-1054 | 7 | | THREADED INSERT-NUT 6-32 .065-IN-LG SST | 46384 | KFS2-632 |
| A71H5 | 1205-0247 | 4 | 1 | HEAT SINK TO-66-CS | 13103 | 6165C TOP ONLY |
| A71H6 | 1251-2551 | 4 | 4 | CONNECTOR-SGL CONT SKT .033-IN-BSC-SZ | 00779 | 332070 |
| A71H7 | 1251-2551 | 4 | | CONNECTOR-SGL CONT SKT .033-IN-BSC-SZ | 00779 | 332070 |
| A71H8 | 1251-2551 | 4 | | CONNECTOR-SGL CONT SKT .033-IN-BSC-SZ | 00779 | 332070 |
| A71H9 | 1251-2551 | 4 | | CONNECTOR-SGL CONT SKT .033-IN-BSC-SZ | 00779 | 332070 |
| A71H10 | 1480-0116 | 8 | 2 | PIN-GRV .062-IN-DIA .25-IN-LG STL | 73957 | GP24-063 X 250-14 |
| A71H11 | 1480-0116 | 8 | | PIN-GRV .062-IN-DIA .25-IN-LG STL | 73957 | GP24-063 X 250-14 |
| A71H12 | 2190-0918 | 4 | 1 | WASHER-LK HLCL NO. 6 .141-IN-ID | 73734 | |
| A71H13 | 2200-0103 | 2 | 1 | SCREW-MACH 4-40 .25-IN-LG PAN-HD-POZI | 83486 | |
| A71H14 | 2360-0115 | 4 | 1 | SCREW-MACH 6-32 .312-IN-LG PAN-HD-POZI | 83486 | |
| A71H15 | 2360-0117 | 6 | 2 | SCREW-MACH 6-32 .375-IN-LG PAN-HD-POZI | 83486 | |
| A71H16 | 2360-0117 | 6 | | SCREW-MACH 6-32 .375-IN-LG PAN-HD-POZI | 83486 | |
| A71H17 | 2360-0119 | 8 | 1 | SCREW-MACH 6-32 .438-IN-LG PAN-HD-POZI | 83486 | |
| A71H18 | 4040-0749 | 4 | 1 | EXTR-PC BD BRN POLYC .062-IN-BD-THKNS | 28480 | |
| A71H19 | 4040-0755 | 2 | 1 | EXTR-PC BD VIO POLYC .062-IN-BD-THKNS | 28480 | |
| A71H20 | 4330-0952 | 6 | 2 | INSULATOR-BEAD CERAMIC | 25706 | 10-215A |

See introduction to this section for ordering information
* Indicates one of several possible values installed

# Table 9-3. Replaceable Parts

| Reference Designation | HP Part Number | C D | Qty. | Description | Mfr. Code | Mfr. Part Number |
|---|---|---|---|---|---|---|
| A71H21 | 4330-0952 | 6 | | INSULATOR-BEAD CERAMIC | 25706 | 10-215A |
| A71L1 | 9140-0244 | 1 | 1 | INC POT CORE FIX 1-2MH | 58439 | Q5213B |
| A71Q1 | 1853-0086 | 2 | 1 | TRANSISTOR PNP SI PD=310MW FT=40MHZ | 04713 | |
| A71Q2 | 1854-0022 | 8 | 1 | TRANSISTOR NPN SI TO-39 PD=700MW | 28480 | 1854-0022 |
| A71Q4 | 1854-0215 | 1 | 1 | TRANSISTOR NPN SI PD=350MW FT=300MHZ | 04713 | |
| A71R2 | 0757-0407 | 6 | 1 | RESISTOR 200 1% .125W F TC=0+-100 | 19701 | SFR25H |
| A71R3 | 0683-4715 | 0 | 1 | RESISTOR 470 5% .25W CF TC=0-400 | 77902 | R-25J |
| A71R5 | 0757-0453 | 2 | 1 | RESISTOR 30.1K 1% .125W F TC=0+-100 | 19701 | SFR25H |
| A71R7 | 0683-1505 | 0 | 4 | RESISTOR 15 5% .25W CF TC=0-400 | 77902 | R-25J |
| A71R8 | 0683-1505 | 0 | | RESISTOR 15 5% .25W CF TC=0-400 | 77902 | R-25J |
| A71R9 | 0683-1505 | 0 | | RESISTOR 15 5% .25W CF TC=0-400 | 77902 | R-25J |
| A71R10 | 0683-1505 | 0 | | RESISTOR 15 5% .25W CF TC=0-400 | 77902 | R-25J |
| A71R11 | 0683-1025 | 9 | 3 | RESISTOR 1K 5% .25W CF TC=0-400 | 77902 | R-25J |
| A71R12 | 0683-1025 | 9 | | RESISTOR 1K 5% .25W CF TC=0-400 | 77902 | R-25J |
| A71R13 | 0683-1035 | 1 | 6 | RESISTOR 10K 5% .25W CF TC=0-400 | 77902 | R-25J |
| A71R14 | 0683-1035 | 1 | | RESISTOR 10K 5% .25W CF TC=0-400 | 77902 | R-25J |
| A71R15 | 0757-0442 | 9 | 1 | RESISTOR 10K 1% .125W F TC=0+-100 | 19701 | SFR25H |
| A71R16 | 0683-1515 | 2 | 1 | RESISTOR 150 5% .25W CF TC=0-400 | 77902 | R-25J |
| A71R17 | 0683-1035 | 1 | | RESISTOR 10K 5% .25W CF TC=0-400 | 77902 | R-25J |
| A71R18 | 0683-1035 | 1 | | RESISTOR 10K 5% .25W CF TC=0-400 | 77902 | R-25J |
| A71R19 | 0683-1015 | 7 | 1 | RESISTOR 100 5% .25W CF TC=0-400 | 77902 | R-25J |
| A71R20 | 0698-6704 | 2 | 1 | RESISTOR 24.9K .25% .125W F TC=0+-100 | 19701 | 5033R |
| A71R21 | 0757-0448 | 5 | 1 | RESISTOR 18.2K 1% .125W F TC=0+-100 | 19701 | SFR25H |
| A71R22 | 0683-6825 | 7 | 1 | RESISTOR 6.8K 5% .25W CF TC=0-400 | 77902 | R-25J |
| A71R23 | 0683-1525 | 4 | 1 | RESISTOR 1.5K 5% .25W CF TC=0-400 | 77902 | R-25J |
| A71R24 | 0683-4725 | 2 | 2 | RESISTOR 4.7K 5% .25W CF TC=0-400 | 77902 | R-25J |
| A71R25 | 0683-1035 | 1 | | RESISTOR 10K 5% .25W CF TC=0-400 | 77902 | R-25J |
| A71R26 | 0683-1035 | 1 | | RESISTOR 10K 5% .25W CF TC=0-400 | 77902 | R-25J |
| A71R27 | 0683-2725 | 8 | 2 | RESISTOR 2.7K 5% .25W CF TC=0-400 | 77902 | R-25J |
| A71R28 | 0683-3915 | 0 | 1 | RESISTOR 390 5% .25W CF TC=0-400 | 77902 | R-25J |
| A71R29 | 0683-1025 | 9 | | RESISTOR 1K 5% .25W CF TC=0-400 | 77902 | R-25J |
| A71R30 | 0683-2725 | 8 | | RESISTOR 2.7K 5% .25W CF TC=0-400 | 77902 | R-25J |
| A71R31 | 0683-4725 | 2 | | RESISTOR 4.7K 5% .25W CF TC=0-400 | 77902 | R-25J |
| A71TP1 | 0360-0124 | 3 | 1 | CONNECTOR-SGL CONT PIN .04-IN-BSC-SZ RND97300 | 97300 | |
| A71U1 | 1813-0110 | 9 | 1 | IC V RGLTR-SWG 80V TO-66 PKG | 9N171 | |
| A71U2 | 1826-0065 | 0 | 2 | IC COMPARATOR PRCN 8-DIP-P PKG | 27014 | |
| A71U3 | 1826-0065 | 0 | | IC COMPARATOR PRCN 8-DIP-P PKG | 27014 | |
| A71U4 | 1820-1199 | 1 | 1 | IC INV TTL LS HEX 1-INP | 01295 | |
| A71U5 | 1820-1112 | 8 | 1 | IC FF TTL LS D-TYPE POS-EDGE-TRIG | 01295 | |
| A71X1 | 2110-0643 | 4 | 1 | FUSEHOLDER-CLIP TYPE 15A 250 V | 55982 | FH-8000 |
| | 7121-4611 | 2 | 1 | LABEL-INFORMATION .15-IN-WD .6-IN-LG | 28480 | L01003 |
| **A72** | **03585-66572** | **7** | **1** | **+5V POWER SUPPLY PC BD ASSEMBLY** | **28480** | **03585-66572** |
| A72C1 | 0180-2687 | 5 | 1 | CAPACITOR-FXD 47UF+100-10% 100VDC AL | 13606 | 672D128 |
| A72C2 | 0160-4835 | 7 | 3 | CAPACITOR-FXD .1UF +-10% 50VDC CER | 04222 | SA115C104KAA |
| A72C3 | 0180-2695 | 5 | 1 | CAPACITOR-FXD 1000UF+100-10% 12VDC AL | 13606 | 672D130 |
| A72C4 | 0160-0154 | 5 | 1 | CAPACITOR-FXD 2200PF +-10% 200VDC POLYE | 15766 | HEW-238M |
| A72C5 | 0180-0309 | 4 | 3 | CAPACITOR-FXD 4.7UF+-20% 10VDC TA | 13606 | 150D475X0010A2-DYS |
| A72C6 | 0180-0309 | 4 | | CAPACITOR-FXD 4.7UF+-20% 10VDC TA | 13606 | 150D475X0010A2-DYS |
| A72C7 | 0180-0309 | 4 | | CAPACITOR-FXD 4.7UF+-20% 10VDC TA | 13606 | 150D475X0010A2-DYS |
| A72C8 | 0180-0116 | 1 | 2 | CAPACITOR-FXD 6.8UF+-10% 35VDC TA | 13606 | 150D685X9035B2-DYS |
| A72C9 | 0160-3847 | 9 | 1 | CAPACITOR-FXD .01UF +100-0% 50VDC CER | 04222 | SA105C103KAA |
| A72C10 | 0160-4835 | 7 | | CAPACITOR-FXD .1UF +-10% 50VDC CER | 04222 | SA115C104KAA |
| A72C11 | 0160-4835 | 7 | | CAPACITOR-FXD .1UF +-10% 50VDC CER | 04222 | SA115C104KAA |
| A72C12 | 0160-4822 | 2 | 2 | CAPACITOR-FXD 1000PF +-5% 100VDC CER | 04222 | SA201A102JAA |
| A72C13 | 0180-0116 | 1 | | CAPACITOR-FXD 6.8UF+-10% 35VDC TA | 13606 | 150D685X9035B2-DYS |
| A72C14 | 0160-4822 | 2 | | CAPACITOR-FXD 1000PF +-5% 100VDC CER | 04222 | SA201A102JAA |
| A72CR1 | 1902-0202 | 9 | 1 | DIODE-ZNR 15V 5% PD=1W IR=5UA | 04713 | |
| A72CR3 | 1990-0598 | 1 | 1 | LED-LAMP LUM-INT=800UCD IF=60MA-MAX | 28480 | 1990-0598 |
| A72CR4 | 1901-0662 | 3 | 1 | DIODE-PWR RECT 100V 6A | 04713 | |
| A72CR5 | 1901-0040 | 1 | 1 | DIODE-SWITCHING 30V 50MA 2NS DO-35 | 9N171 | |
| A72CR6 | 1990-0597 | 0 | 1 | LED-LAMP LUM-INT=1MCD IF=60MA-MAX BVR=5V28480 | 28480 | 1990-0597 |
| A72F1 | 2110-0043 | 8 | 1 | FUSE 1.5A 250V NTD 1.25X.25 UL | 75915 | 312 01.5 |

See introduction to this section for ordering information
* Indicates one of several possible values installed

# Table 9-3. Replaceable Parts

| Reference Designation | HP Part Number | C D | Qty. | Description | Mfr. Code | Mfr. Part Number |
|---|---|---|---|---|---|---|
| A72H1 | 03585-01102 | 3 | 1 | SHTF SINK-72 HEAT AL | 28480 | 03585-01102 |
| A72H2 | 0590-1054 | 7 | 4 | THREADED INSERT-NUT 6-32 .065-IN-LG SST | 46384 | KFS2-632 |
| A72H3 | 0590-1054 | 7 | | THREADED INSERT-NUT 6-32 .065-IN-LG SST | 46384 | KFS2-632 |
| A72H4 | 0590-1054 | 7 | | THREADED INSERT-NUT 6-32 .065-IN-LG SST | 46384 | KFS2-632 |
| A72H5 | 0590-1054 | 7 | | THREADED INSERT-NUT 6-32 .065-IN-LG SST | 46384 | KFS2-632 |
| A72H7 | 1480-0116 | 8 | 1 | PIN-GRV .062-IN-DIA .25-IN-LG STL | 73957 | GP24-063 X 250-14 |
| A72H10 | 2360-0115 | 4 | 4 | SCREW-MACH 6-32 .312-IN-LG PAN-HD-POZI | 83486 | |
| A72H11 | 2360-0115 | 4 | | SCREW-MACH 6-32 .312-IN-LG PAN-HD-POZI | 83486 | |
| A72H12 | 2360-0115 | 4 | | SCREW-MACH 6-32 .312-IN-LG PAN-HD-POZI | 83486 | |
| A72H13 | 2360-0115 | 4 | | SCREW-MACH 6-32 .312-IN-LG PAN-HD-POZI | 83486 | |
| A72H14 | 4040-0755 | 2 | 1 | EXTR-PC BD VIO POLYC .062-IN-BD-THKNS | 28480 | |
| A72L1 | 9140-0700 | 4 | 1 | INDUCTOR-FIXED INDUCTANCE: 0.15MH MIN AT58439 | 58439 | 1990 |
| A72MP1 | 1251-1636 | 4 | 3 | CONNECTOR-SGL CONT SKT .04-IN-BSC-SZ RND06776 | 06776 | PS-40-832-TG30 |
| A72MP2 | 1251-1636 | 4 | | CONNECTOR-SGL CONT SKT .04-IN-BSC-SZ RND06776 | 06776 | PS-40-832-TG30 |
| A72MP3 | 1251-1636 | 4 | | CONNECTOR-SGL CONT SKT .04-IN-BSC-SZ RND06776 | 06776 | PS-40-832-TG30 |
| A72Q3 | 1854-0022 | 8 | 1 | TRANSISTOR NPN SI TO-39 PD=700MW | 28480 | 1854-0022 |
| A72Q4 | 1854-0215 | 1 | 1 | TRANSISTOR NPN SI PD=350MW FT=300MHZ | 04713 | |
| A72Q5 | 1853-0086 | 2 | 1 | TRANSISTOR PNP SI PD=310MW FT=40MHZ | 04713 | |
| A72R4 | 0683-1615 | 3 | 1 | RESISTOR 160 5% .25W CF TC=0-400 | 77902 | R-25J |
| A72R5 | 0683-3915 | 0 | 1 | RESISTOR 390 5% .25W CF TC=0-400 | 77902 | R-25J |
| A72R6 | 0683-1505 | 0 | 5 | RESISTOR 15 5% .25W CF TC=0-400 | 77902 | R-25J |
| A72R7 | 0683-1505 | 0 | | RESISTOR 15 5% .25W CF TC=0-400 | 77902 | R-25J |
| A72R8 | 0683-1505 | 0 | | RESISTOR 15 5% .25W CF TC=0-400 | 77902 | R-25J |
| A72R9 | 0683-1025 | 9 | 3 | RESISTOR 1K 5% .25W CF TC=0-400 | 77902 | R-25J |
| A72R10 | 0683-1015 | 7 | 3 | RESISTOR 100 5% .25W CF TC=0-400 | 77902 | R-25J |
| A72R11 | 0683-1505 | 0 | | RESISTOR 15 5% .25W CF TC=0-400 | 77902 | R-25J |
| A72R12 | 0683-1035 | 1 | 6 | RESISTOR 10K 5% .25W CF TC=0-400 | 77902 | R-25J |
| A72R13 | 0683-1035 | 1 | | RESISTOR 10K 5% .25W CF TC=0-400 | 77902 | R-25J |
| A72R14 | 0683-6825 | 7 | 1 | RESISTOR 6.8K 5% .25W CF TC=0-400 | 77902 | R-25J |
| A72R15 | 0683-1015 | 7 | | RESISTOR 100 5% .25W CF TC=0-400 | 77902 | R-25J |
| A72R16 | 0683-1035 | 1 | | RESISTOR 10K 5% .25W CF TC=0-400 | 77902 | R-25J |
| A72R17 | 0683-1035 | 1 | | RESISTOR 10K 5% .25W CF TC=0-400 | 77902 | R-25J |
| A72R18 | 0683-4725 | 2 | 1 | RESISTOR 4.7K 5% .25W CF TC=0-400 | 77902 | R-25J |
| A72R19 | 2100-3273 | 1 | 1 | RESISTOR-TRMR 2K 10% C SIDE-ADJ 1-TRN | 32997 | 3386X-Y46-202 |
| A72R20 | 0757-0459 | 8 | 1 | RESISTOR 56.2K 1% .125W F TC=0+-100 | 19701 | SFR25H |
| A72R21 | 0683-1505 | 0 | | RESISTOR 15 5% .25W CF TC=0-400 | 77902 | R-25J |
| A72R22 | 0683-1015 | 7 | | RESISTOR 100 5% .25W CF TC=0-400 | 77902 | R-25J |
| A72R23 | 0683-2725 | 8 | 2 | RESISTOR 2.7K 5% .25W CF TC=0-400 | 77902 | R-25J |
| A72R24 | 0683-1025 | 9 | | RESISTOR 1K 5% .25W CF TC=0-400 | 77902 | R-25J |
| A72R25 | 0683-2725 | 8 | | RESISTOR 2.7K 5% .25W CF TC=0-400 | 77902 | R-25J |
| A72R26 | 0683-1525 | 4 | 1 | RESISTOR 1.5K 5% .25W CF TC=0-400 | 77902 | R-25J |
| A72R27 | 0683-1035 | 1 | | RESISTOR 10K 5% .25W CF TC=0-400 | 77902 | R-25J |
| A72R28 | 0757-0442 | 9 | 1 | RESISTOR 10K 1% .125W F TC=0+-100 | 19701 | SFR25H |
| A72R29 | 0683-1025 | 9 | | RESISTOR 1K 5% .25W CF TC=0-400 | 77902 | R-25J |
| A72R30 | 0698-4480 | 7 | 1 | RESISTOR 15.8K 1% .125W F TC=0+-100 | 91637 | CMF-55-1, T-1 |
| A72R31 | 2100-3207 | 1 | 1 | RESISTOR-TRMR 5K 10% C SIDE-ADJ 1-TRN | 32997 | 3386X-Y46-502 |
| A72R32 | 0698-4470 | 5 | 1 | RESISTOR 6.98K 1% .125W F TC=0+-100 | 91637 | CMF-55-1, T-1 |
| A72R33 | 0812-0031 | 0 | 1 | RESISTOR 200 5% .25W PWW TC=+4000+-400 | 01686 | R389 |
| A72R34 | 0683-1035 | 1 | | RESISTOR 10K 5% .25W CF TC=0-400 | 77902 | R-25J |
| A72R35 | 0683-3335 | 8 | 1 | RESISTOR 33K 5% .25W CF TC=0-400 | 77902 | R-25J |
| A72TP1 | 1251-0600 | 0 | 1 | CONNECTOR-SGL CONT PIN 1.14-MM-BSC-SZ SQ27264 | 27264 | 16-06-0034 |
| A72U1 | 1826-0065 | 0 | 2 | IC COMPARATOR PRCN 8-DIP-P PKG | 27014 | |
| A72U2 | 1826-0065 | 0 | | IC COMPARATOR PRCN 8-DIP-P PKG | 27014 | |
| A72U3 | 1820-1199 | 1 | 1 | IC INV TTL LS HEX 1-INP | 01295 | |
| A72U4 | 1820-1112 | 8 | 1 | IC FF TTL LS D-TYPE POS-EDGE-TRIG | 01295 | |
| A72U5 | 1813-0082 | 4 | 1 | IC V RGLTR-SWG 80V TO-3 PKG | 9N171 | |
| A72X1 | 2110-0643 | 4 | 1 | FUSEHOLDER-CLIP TYPE 15A 250 V | 55982 | FH-8000 |
| | 3050-0082 | 8 | 4 | WASHER-FL NM NO. 4 .116-IN-ID .188-IN-OD34114 | 34114 | 8942-3 |
| | 7121-4611 | 2 | 1 | LABEL-INFORMATION .15-IN-WD .6-IN-LG | 28480 | L01003 |
| **A73** | **03585-66573** | **8** | **1** | **+18V POWER SUPPLY PC BD ASSEMBLY** | **28480** | **03585-66573** |
| A73C1 | 0180-2687 | 5 | 1 | CAPACITOR-FXD 47UF+100-10% 100VDC AL | 13606 | 672D128 |
| A73C2 | 0160-6509 | 6 | 4 | C-F .1UF --% 100V CERMLr | 28480 | RPE122-977Z5U104Z100V |
| A73C3 | 0180-2686 | 4 | 1 | CAPACITOR-FXD 470UF+100-10% 25VDC AL | 13606 | 672D129 |
| A73C4 | 0160-3456 | 6 | 4 | CAPACITOR-FXD 1000PF +-10% 1KVDC CER | 59660 | 808-542 X5E 102K |
| A73C5 | 0180-0116 | 1 | 2 | CAPACITOR-FXD 6.8UF+-10% 35VDC TA | 13606 | 150D685X9035B2-DYS |

See introduction to this section for ordering information
* Indicates one of several possible values installed

# Table 9-3. Replaceable Parts

| Reference Designation | HP Part Number | C D | Qty. | Description | Mfr. Code | Mfr. Part Number |
|---|---|---|---|---|---|---|
| A73C6 | 0180-0309 | 4 | 2 | CAPACITOR-FXD 4.7UF+-20% 10VDC TA | 13606 | 150D475X0010A2-DYS |
| A73C7 | 0160-6509 | 6 | | C-F .1UF --% 100V CERMLr | 28480 | RPE122-977Z5U104Z100V |
| A73C8 | 0180-0309 | 4 | | CAPACITOR-FXD 4.7UF+-20% 10VDC TA | 13606 | 150D475X0010A2-DYS |
| A73C9 | 0160-0300 | 3 | 1 | CAPACITOR-FXD 2700PF +-10% 200VDC POLYE | 15766 | HEW-238M |
| A73C10 | 0180-0116 | 1 | | CAPACITOR-FXD 6.8UF+-10% 35VDC TA | 13606 | 150D685X9035B2-DYS |
| A73C11 | 0160-2055 | 9 | 1 | CAPACITOR-FXD .01UF +80-20% 100VDC CER | 59660 | 805-504 Y5V 103Z |
| A73C12 | 0160-3456 | 6 | | CAPACITOR-FXD 1000PF +-10% 1KVDC CER | 59660 | 808-542 X5E 102K |
| A73C13 | 0160-6509 | 6 | | C-F .1UF --% 100V CERMLr | 28480 | RPE122-977Z5U104Z100V |
| A73C14 | 0160-3456 | 6 | | CAPACITOR-FXD 1000PF +-10% 1KVDC CER | 59660 | 808-542 X5E 102K |
| A73C15 | 0160-6509 | 6 | | C-F .1UF --% 100V CERMLr | 28480 | RPE122-977Z5U104Z100V |
| A73C16 | 0160-3456 | 6 | | CAPACITOR-FXD 1000PF +-10% 1KVDC CER | 59660 | 808-542 X5E 102K |
| A73CR1 | 1901-0040 | 1 | 1 | DIODE-SWITCHING 30V 50MA 2NS DO-35 | 9N171 | |
| A73CR2 | 1902-0202 | 9 | 1 | DIODE-ZNR 15V 5% PD=1W IR=5UA | 04713 | |
| A73CR3 | 1990-0598 | 1 | 1 | LED-LAMP LUM-INT=800UCD IF=60MA-MAX | 28480 | 1990-0598 |
| A73CR4 | 1901-0026 | 3 | 1 | DIODE-PWR RECT 200V 750MA DO-29 | 04713 | |
| A73CR5 | 1990-0597 | 0 | 1 | LED-LAMP LUM-INT=1MCD IF=60MA-MAX BVR=5V28480 | 28480 | 1990-0597 |
| A73F1 | 2110-0043 | 8 | 1 | FUSE 1.5A 250V NTD 1.25X.25 UL | 75915 | 312 01.5 |
| A73H1 | 03582-01103 | 1 | 1 | SHTF HEAT SINK | 28480 | 03582-01103 |
| A73H1 | 7204-0513 | 1 | | SHT-AL 1.6MM/.063TK 32Wx 48LG | 28480 | 7204-0513 |
| A73H3 | 0590-1054 | 7 | 2 | THREADED INSERT-NUT 6-32 .065-IN-LG SST | 46384 | KFS2-632 |
| A73H4 | 0590-1054 | 7 | | THREADED INSERT-NUT 6-32 .065-IN-LG SST | 46384 | KFS2-632 |
| A73H5 | 1205-0247 | 4 | 1 | HEAT SINK TO-66-CS | 13103 | 6165C TOP ONLY |
| A73H6 | 1251-2551 | 4 | 4 | CONNECTOR-SGL CONT SKT .033-IN-BSC-SZ | 00779 | 332070 |
| A73H7 | 1251-2551 | 4 | | CONNECTOR-SGL CONT SKT .033-IN-BSC-SZ | 00779 | 332070 |
| A73H8 | 1251-2551 | 4 | | CONNECTOR-SGL CONT SKT .033-IN-BSC-SZ | 00779 | 332070 |
| A73H9 | 1251-2551 | 4 | | CONNECTOR-SGL CONT SKT .033-IN-BSC-SZ | 00779 | 332070 |
| A73H10 | 1480-0116 | 8 | 2 | PIN-GRV .062-IN-DIA .25-IN-LG STL | 73957 | GP24-063 X 250-14 |
| A73H11 | 1480-0116 | 8 | | PIN-GRV .062-IN-DIA .25-IN-LG STL | 73957 | GP24-063 X 250-14 |
| A73H12 | 2200-0103 | 2 | 1 | SCREW-MACH 4-40 .25-IN-LG PAN-HD-POZI | 83486 | |
| A73H13 | 2360-0115 | 4 | 1 | SCREW-MACH 6-32 .312-IN-LG PAN-HD-POZI | 83486 | |
| A73H14 | 2360-0117 | 6 | 2 | SCREW-MACH 6-32 .375-IN-LG PAN-HD-POZI | 83486 | |
| A73H15 | 2360-0117 | 6 | | SCREW-MACH 6-32 .375-IN-LG PAN-HD-POZI | 83486 | |
| A73H16 | 4040-0752 | 9 | 1 | EXTR-PC BD YEL POLYC .062-IN-BD-THKNS | 28480 | |
| A73H17 | 4040-0755 | 2 | 2 | EXTR-PC BD VIO POLYC .062-IN-BD-THKNS | 28480 | |
| A73H18 | 4330-0952 | 6 | 2 | INSULATOR-BEAD CERAMIC | 25706 | 10-215A |
| A73H19 | 4330-0952 | 6 | | INSULATOR-BEAD CERAMIC | 25706 | 10-215A |
| A73L1 | 9140-0244 | 1 | 1 | INC POT CORE FIX 1-2MH | 58439 | Q5213B |
| A73Q1 | 1853-0086 | 2 | 1 | TRANSISTOR PNP SI PD=310MW FT=40MHZ | 04713 | |
| A73Q2 | 1854-0022 | 8 | 1 | TRANSISTOR NPN SI TO-39 PD=700MW | 28480 | 1854-0022 |
| A73Q3 | 1854-0215 | 1 | 2 | TRANSISTOR NPN SI PD=350MW FT=300MHZ | 04713 | |
| A73Q4 | 1854-0215 | 1 | | TRANSISTOR NPN SI PD=350MW FT=300MHZ | 04713 | |
| A73R1 | 0683-1505 | 0 | 5 | RESISTOR 15 5% .25W CF TC=0-400 | 77902 | R-25J |
| A73R2 | 0757-0404 | 3 | 1 | RESISTOR 130 1% .125W F TC=0+-100 | 19701 | SFR25H |
| A73R3 | 0687-1021 | 3 | 1 | RESISTOR 1K 10% .5W CC TC=0+647 | 01121 | EB1021 |
| A73R4 | 0683-1025 | 9 | 4 | RESISTOR 1K 5% .25W CF TC=0-400 | 77902 | R-25J |
| A73R5 | 0757-0449 | 6 | 1 | RESISTOR 20K 1% .125W F TC=0+-100 | 19701 | SFR25H |
| A73R6 | 0683-3915 | 0 | 2 | RESISTOR 390 5% .25W CF TC=0-400 | 77902 | R-25J |
| A73R7 | 0683-1505 | 0 | | RESISTOR 15 5% .25W CF TC=0-400 | 77902 | R-25J |
| A73R8 | 0683-1505 | 0 | | RESISTOR 15 5% .25W CF TC=0-400 | 77902 | R-25J |
| A73R9 | 0683-1505 | 0 | | RESISTOR 15 5% .25W CF TC=0-400 | 77902 | R-25J |
| A73R10 | 0683-1035 | 1 | 7 | RESISTOR 10K 5% .25W CF TC=0-400 | 77902 | R-25J |
| A73R11 | 0683-1025 | 9 | | RESISTOR 1K 5% .25W CF TC=0-400 | 77902 | R-25J |
| A73R12 | 0683-1025 | 9 | | RESISTOR 1K 5% .25W CF TC=0-400 | 77902 | R-25J |
| A73R13 | 0683-1035 | 1 | | RESISTOR 10K 5% .25W CF TC=0-400 | 77902 | R-25J |
| A73R14 | 0683-1035 | 1 | | RESISTOR 10K 5% .25W CF TC=0-400 | 77902 | R-25J |
| A73R15 | 0757-0442 | 9 | 1 | RESISTOR 10K 1% .125W F TC=0+-100 | 19701 | SFR25H |
| A73R16 | 0683-1515 | 2 | 1 | RESISTOR 150 5% .25W CF TC=0-400 | 77902 | R-25J |
| A73R17 | 0683-1035 | 1 | | RESISTOR 10K 5% .25W CF TC=0-400 | 77902 | R-25J |
| A73R18 | 0683-1035 | 1 | | RESISTOR 10K 5% .25W CF TC=0-400 | 77902 | R-25J |
| A73R19 | 0683-1015 | 7 | 1 | RESISTOR 100 5% .25W CF TC=0-400 | 77902 | R-25J |
| A73R20 | 0698-6704 | 2 | 1 | RESISTOR 24.9K .25% .125W F TC=0+-100 | 19701 | 5033R |
| A73R21 | 0683-1505 | 0 | | RESISTOR 15 5% .25W CF TC=0-400 | 77902 | R-25J |
| A73R22 | 0683-6825 | 7 | 1 | RESISTOR 6.8K 5% .25W CF TC=0-400 | 77902 | R-25J |
| A73R23 | 0683-1525 | 4 | 1 | RESISTOR 1.5K 5% .25W CF TC=0-400 | 77902 | R-25J |
| A73R24 | 0683-4725 | 2 | 2 | RESISTOR 4.7K 5% .25W CF TC=0-400 | 77902 | R-25J |

See introduction to this section for ordering information
* Indicates one of several possible values installed

# Table 9-3. Replaceable Parts

| Reference Designation | HP Part Number | C D | Qty. | Description | Mfr. Code | Mfr. Part Number |
|---|---|---|---|---|---|---|
| A73R25 | 0683-1035 | 1 | | RESISTOR 10K 5% .25W CF TC=0-400 | 77902 | R-25J |
| A73R26 | 0683-1035 | 1 | | RESISTOR 10K 5% .25W CF TC=0-400 | 77902 | R-25J |
| A73R27 | 0683-2725 | 8 | 2 | RESISTOR 2.7K 5% .25W CF TC=0-400 | 77902 | R-25J |
| A73R28 | 0683-3915 | 0 | | RESISTOR 390 5% .25W CF TC=0-400 | 77902 | R-25J |
| A73R29 | 0683-1025 | 9 | | RESISTOR 1K 5% .25W CF TC=0-400 | 77902 | R-25J |
| A73R30 | 0683-2725 | 8 | | RESISTOR 2.7K 5% .25W CF TC=0-400 | 77902 | R-25J |
| A73R31 | 0683-4725 | 2 | | RESISTOR 4.7K 5% .25W CF TC=0-400 | 77902 | R-25J |
| A73R32 | 0698-3228 | 9 | 1 | RESISTOR 49.9K 1% .125W F TC=0+-100 | 19701 | SFR25H |
| A73TP1 | 0360-0124 | 3 | 1 | CONNECTOR-SGL CONT PIN .04-IN-BSC-SZ RND97300 | 97300 | |
| A73U1 | 1813-0083 | 5 | 1 | IC V RGLTR-SWG 80V TO-66 PKG | 9N171 | |
| A73U2 | 1826-0065 | 0 | 2 | IC COMPARATOR PRCN 8-DIP-P PKG | 27014 | |
| A73U3 | 1826-0065 | 0 | | IC COMPARATOR PRCN 8-DIP-P PKG | 27014 | |
| A73U4 | 1820-1199 | 1 | 1 | IC INV TTL LS HEX 1-INP | 01295 | |
| A73U5 | 1820-1112 | 8 | 1 | IC FF TTL LS D-TYPE POS-EDGE-TRIG | 01295 | |
| A73X1 | 2110-0643 | 4 | 1 | FUSEHOLDER-CLIP TYPE 15A 250 V | 55982 | FH-8000 |
| | 7121-4611 | 2 | 2 | LABEL-INFORMATION .15-IN-WD .6-IN-LG | 28480 | L01003 |
| | 7121-4611 | 2 | | LABEL-INFORMATION .15-IN-WD .6-IN-LG | 28480 | L01003 |
| | 4040-0751 | 8 | 1 | EXTR-PC BD ORN POLYC .062-IN-BD-THKNS | 28480 | |
| | 4040-0755 | 2 | | EXTR-PC BD VIO POLYC .062-IN-BD-THKNS | 28480 | |
| **A74** | **03585-66574** | **9** | **1** | **-18V POWER SUPPLY PC BD ASSEMBLY** | **28480** | **03585-66574** |
| A74C1 | 0180-0309 | 4 | 3 | CAPACITOR-FXD 4.7UF+-20% 10VDC TA | 13606 | 150D475X0010A2-DYS |
| A74C2 | 0180-0309 | 4 | | CAPACITOR-FXD 4.7UF+-20% 10VDC TA | 13606 | 150D475X0010A2-DYS |
| A74C3 | 0160-6509 | 6 | 4 | C-F .1UF --% 100V CERMLr | 28480 | RPE122-977Z5U104Z100V |
| A74C4 | 0180-0116 | 1 | 1 | CAPACITOR-FXD 6.8UF+-10% 35VDC TA | 13606 | 150D685X9035B2-DYS |
| A74C5 | 0160-0300 | 3 | 1 | CAPACITOR-FXD 2700PF +-10% 200VDC POLYE | 15766 | HEW-238M |
| A74C6 | 0160-2204 | 0 | 1 | CAPACITOR-FXD 100PF +-5% 300VDC MICA | 00853 | D153F101J |
| A74C7 | 0160-2055 | 9 | 1 | CAPACITOR-FXD .01UF +80-20% 100VDC CER | 59660 | 805-504 Y5V 103Z |
| A74C8 | 0160-6509 | 6 | | C-F .1UF --% 100V CERMLr | 28480 | RPE122-977Z5U104Z100V |
| A74C9 | 0160-3456 | 6 | 3 | CAPACITOR-FXD 1000PF +-10% 1KVDC CER | 59660 | 808-542 X5E 102K |
| A74C10 | 0160-3456 | 6 | | CAPACITOR-FXD 1000PF +-10% 1KVDC CER | 59660 | 808-542 X5E 102K |
| A74C11 | 0180-0309 | 4 | | CAPACITOR-FXD 4.7UF+-20% 10VDC TA | 13606 | 150D475X0010A2-DYS |
| A74C12 | 0180-2687 | 5 | 1 | CAPACITOR-FXD 47UF+100-10% 100VDC AL | 13606 | 672D128 |
| A74C13 | 0160-6509 | 6 | | C-F .1UF --% 100V CERMLr | 28480 | RPE122-977Z5U104Z100V |
| A74C14 | 0180-2686 | 4 | 1 | CAPACITOR-FXD 470UF+100-10% 25VDC AL | 13606 | 672D129 |
| A74C15 | 0160-6509 | 6 | | C-F .1UF --% 100V CERMLr | 28480 | RPE122-977Z5U104Z100V |
| A74C16 | 0160-3456 | 6 | | CAPACITOR-FXD 1000PF +-10% 1KVDC CER | 59660 | 808-542 X5E 102K |
| A74CR1 | 1990-0597 | 0 | 1 | LED-LAMP LUM-INT=1MCD IF=60MA-MAX BVR=5V28480 | 28480 | 1990-0597 |
| A74CR2 | 1901-0040 | 1 | 1 | DIODE-SWITCHING 30V 50MA 2NS DO-35 | 9N171 | |
| A74CR3 | 1902-0202 | 9 | 1 | DIODE-ZNR 15V 5% PD=1W IR=5UA | 04713 | |
| A74CR4 | 1990-0598 | 1 | 1 | LED-LAMP LUM-INT=800UCD IF=60MA-MAX | 28480 | 1990-0598 |
| A74CR5 | 1901-0026 | 3 | 1 | DIODE-PWR RECT 200V 750MA DO-29 | 04713 | |
| A74F1 | 2110-0043 | 8 | 1 | FUSE 1.5A 250V NTD 1.25X.25 UL | 75915 | 312 01.5 |
| A74H1 | 03582-01103 | 1 | 1 | SHTF HEAT SINK | 28480 | 03582-01103 |
| A74H3 | 0590-1054 | 7 | 2 | THREADED INSERT-NUT 6-32 .065-IN-LG SST | 46384 | KFS2-632 |
| A74H4 | 0590-1054 | 7 | | THREADED INSERT-NUT 6-32 .065-IN-LG SST | 46384 | KFS2-632 |
| A74H5 | 1205-0247 | 4 | 1 | HEAT SINK TO-66-CS | 13103 | 6165C TOP ONLY |
| A74H6 | 1251-2551 | 4 | 4 | CONNECTOR-SGL CONT SKT .033-IN-BSC-SZ | 00779 | 332070 |
| A74H7 | 1251-2551 | 4 | | CONNECTOR-SGL CONT SKT .033-IN-BSC-SZ | 00779 | 332070 |
| A74H8 | 1251-2551 | 4 | | CONNECTOR-SGL CONT SKT .033-IN-BSC-SZ | 00779 | 332070 |
| A74H9 | 1251-2551 | 4 | | CONNECTOR-SGL CONT SKT .033-IN-BSC-SZ | 00779 | 332070 |
| A74H10 | 1480-0116 | 8 | 2 | PIN-GRV .062-IN-DIA .25-IN-LG STL | 73957 | GP24-063 X 250-14 |
| A74H11 | 1480-0116 | 8 | | PIN-GRV .062-IN-DIA .25-IN-LG STL | 73957 | GP24-063 X 250-14 |
| A74H12 | 2200-0103 | 2 | 1 | SCREW-MACH 4-40 .25-IN-LG PAN-HD-POZI | 83486 | |
| A74H13 | 2360-0115 | 4 | 1 | SCREW-MACH 6-32 .312-IN-LG PAN-HD-POZI | 83486 | |
| A74H14 | 2360-0117 | 6 | 2 | SCREW-MACH 6-32 .375-IN-LG PAN-HD-POZI | 83486 | |
| A74H15 | 2360-0117 | 6 | | SCREW-MACH 6-32 .375-IN-LG PAN-HD-POZI | 83486 | |
| A74H16 | 4040-0752 | 9 | 1 | EXTR-PC BD YEL POLYC .062-IN-BD-THKNS | 28480 | |
| A74H17 | 4040-0755 | 2 | 1 | EXTR-PC BD VIO POLYC .062-IN-BD-THKNS | 28480 | |
| A74H18 | 4330-0952 | 6 | 2 | INSULATOR-BEAD CERAMIC | 25706 | 10-215A |
| A74H19 | 4330-0952 | 6 | | INSULATOR-BEAD CERAMIC | 25706 | 10-215A |
| A74L1 | 9140-0244 | 1 | 1 | INC POT CORE FIX 1-2MH | 58439 | Q5213B |
| A74Q1 | 1854-0215 | 1 | 2 | TRANSISTOR NPN SI PD=350MW FT=300MHZ | 04713 | |
| A74Q2 | 1854-0215 | 1 | | TRANSISTOR NPN SI PD=350MW FT=300MHZ | 04713 | |
| A74Q3 | 1853-0210 | 4 | 1 | TRANSISTOR PNP SI TO-39 PD=1W FT=50MHZ | 04713 | |
| A74R1 | 0683-1505 | 0 | 4 | RESISTOR 15 5% .25W CF TC=0-400 | 77902 | R-25J |

See introduction to this section for ordering information
* Indicates one of several possible values installed

# Table 9-3. Replaceable Parts

| Reference Designation | HP Part Number | C D | Qty. | Description | Mfr. Code | Mfr. Part Number |
|---|---|---|---|---|---|---|
| A74R2 | 0683-1505 | 0 | | RESISTOR 15 5% .25W CF TC=0-400 | 77902 | R-25J |
| A74R3 | 0683-1525 | 4 | 3 | RESISTOR 1.5K 5% .25W CF TC=0-400 | 77902 | R-25J |
| A74R4 | 0683-1525 | 4 | | RESISTOR 1.5K 5% .25W CF TC=0-400 | 77902 | R-25J |
| A74R5 | 0683-2725 | 8 | 2 | RESISTOR 2.7K 5% .25W CF TC=0-400 | 77902 | R-25J |
| A74R6 | 0683-3915 | 0 | 1 | RESISTOR 390 5% .25W CF TC=0-400 | 77902 | R-25J |
| A74R7 | 0683-1025 | 9 | 3 | RESISTOR 1K 5% .25W CF TC=0-400 | 77902 | R-25J |
| A74R8 | 0683-2725 | 8 | | RESISTOR 2.7K 5% .25W CF TC=0-400 | 77902 | R-25J |
| A74R9 | 0683-1525 | 4 | | RESISTOR 1.5K 5% .25W CF TC=0-400 | 77902 | R-25J |
| A74R10 | 0683-1035 | 1 | 7 | RESISTOR 10K 5% .25W CF TC=0-400 | 77902 | R-25J |
| A74R11 | 0683-1035 | 1 | | RESISTOR 10K 5% .25W CF TC=0-400 | 77902 | R-25J |
| A74R12 | 0683-4725 | 2 | 1 | RESISTOR 4.7K 5% .25W CF TC=0-400 | 77902 | R-25J |
| A74R13 | 0683-1025 | 9 | | RESISTOR 1K 5% .25W CF TC=0-400 | 77902 | R-25J |
| A74R14 | 0683-1035 | 1 | | RESISTOR 10K 5% .25W CF TC=0-400 | 77902 | R-25J |
| A74R15 | 0683-1035 | 1 | | RESISTOR 10K 5% .25W CF TC=0-400 | 77902 | R-25J |
| A74R16 | 0683-1025 | 9 | | RESISTOR 1K 5% .25W CF TC=0-400 | 77902 | R-25J |
| A74R17 | 0683-1015 | 7 | 2 | RESISTOR 100 5% .25W CF TC=0-400 | 77902 | R-25J |
| A74R18 | 0683-1035 | 1 | | RESISTOR 10K 5% .25W CF TC=0-400 | 77902 | R-25J |
| A74R19 | 0683-1015 | 7 | | RESISTOR 100 5% .25W CF TC=0-400 | 77902 | R-25J |
| A74R20 | 0683-1505 | 0 | | RESISTOR 15 5% .25W CF TC=0-400 | 77902 | R-25J |
| A74R21 | 0683-1505 | 0 | | RESISTOR 15 5% .25W CF TC=0-400 | 77902 | R-25J |
| A74R22 | 0683-1035 | 1 | | RESISTOR 10K 5% .25W CF TC=0-400 | 77902 | R-25J |
| A74R23 | 0757-0442 | 9 | 1 | RESISTOR 10K 1% .125W F TC=0+-100 | 19701 | SFR25H |
| A74R24 | 0683-1035 | 1 | | RESISTOR 10K 5% .25W CF TC=0-400 | 77902 | R-25J |
| A74R25 | 0683-4715 | 0 | 1 | RESISTOR 470 5% .25W CF TC=0-400 | 77902 | R-25J |
| A74R26 | 0683-4705 | 8 | 1 | RESISTOR 47 5% .25W CF TC=0-400 | 77902 | R-25J |
| A74R27 | 0698-3582 | 8 | 1 | RESISTOR 41.2K 1% .125W F TC=0+-100 | 19701 | SFR25H |
| A74R28 | 0757-0284 | 7 | 1 | RESISTOR 150 1% .125W F TC=0+-100 | 19701 | SFR25H |
| A74R30 | 0687-1021 | 3 | 1 | RESISTOR 1K 10% .5W CC TC=0+647 | 01121 | EB1021 |
| A74TP1 | 0360-0124 | 3 | 1 | CONNECTOR-SGL CONT PIN .04-IN-BSC-SZ RND97300 | 97300 | |
| A74U1 | 1820-1199 | 1 | 1 | IC INV TTL LS HEX 1-INP | 01295 | |
| A74U2 | 1820-1112 | 8 | 1 | IC FF TTL LS D-TYPE POS-EDGE-TRIG | 01295 | |
| A74U3 | 1826-0065 | 0 | 2 | IC COMPARATOR PRCN 8-DIP-P PKG | 27014 | |
| A74U4 | 1826-0065 | 0 | | IC COMPARATOR PRCN 8-DIP-P PKG | 27014 | |
| A74U5 | 1813-0084 | 6 | 1 | IC V RGLTR-SWG 80V TO-66 PKG | 9N171 | |
| A74X1 | 2110-0643 | 4 | 1 | FUSEHOLDER-CLIP TYPE 15A 250 V | 55982 | FH-8000 |
| | 7121-4611 | 2 | 1 | LABEL-INFORMATION .15-IN-WD .6-IN-LG | 28480 | L01003 |
| **A75** | **03585-66575** | **0** | **1** | **POWER SUPPLY CONTROL PC BD ASSEMBLY** | **28480** | **03585-66575** |
| A75C1 | 0180-1748 | 7 | 1 | CAPACITOR-FXD 45UF+50-10% 250VDC AL | 13606 | D42262-DSB |
| A75C2 | 0180-2216 | 6 | 2 | CAPACITOR-FXD 350UF+75-10% 16VDC AL | 13606 | 30D357G016DH2-DSM |
| A75C3 | 0180-2216 | 6 | | CAPACITOR-FXD 350UF+75-10% 16VDC AL | 13606 | 30D357G016DH2-DSM |
| A75C4 | 0180-0228 | 6 | 3 | CAPACITOR-FXD 22UF+-10% 15VDC TA | 13606 | 150D226X9015B2-DYS |
| A75C5 | 0180-0228 | 6 | | CAPACITOR-FXD 22UF+-10% 15VDC TA | 13606 | 150D226X9015B2-DYS |
| A75C6 | 0180-0141 | 2 | 2 | CAPACITOR-FXD 50UF+75-10% 50VDC AL | 13606 | 30D506G050DD2-DSM |
| A75C7 | 0180-0141 | 2 | | CAPACITOR-FXD 50UF+75-10% 50VDC AL | 13606 | 30D506G050DD2-DSM |
| A75C8 | 0180-0291 | 3 | 1 | CAPACITOR-FXD 1UF+-10% 35VDC TA | 13606 | 150D105X9035A2-DYS |
| A75C9 | 0180-0228 | 6 | | CAPACITOR-FXD 22UF+-10% 15VDC TA | 13606 | 150D226X9015B2-DYS |
| A75C10 | 0160-2373 | 4 | 1 | CAPACITOR-FXD 4700PF +-2% 300VDC MICA | 09023 | |
| A75C11 | 0160-6509 | 6 | 1 | C-F .1UF --% 100V CERMLr | 28480 | RPE122-977Z5U104Z100V |
| A75CR1 | 1906-0069 | 4 | 2 | DIODE-FW BRDG 400V 1A | 27777 | |
| A75CR2 | 1906-0069 | 4 | | DIODE-FW BRDG 400V 1A | 27777 | |
| A75CR3 | 1901-0026 | 3 | 8 | DIODE-PWR RECT 200V 750MA DO-29 | 04713 | |
| A75CR4 | 1901-0026 | 3 | | DIODE-PWR RECT 200V 750MA DO-29 | 04713 | |
| A75CR5 | 1901-0026 | 3 | | DIODE-PWR RECT 200V 750MA DO-29 | 04713 | |
| A75CR6 | 1901-0026 | 3 | | DIODE-PWR RECT 200V 750MA DO-29 | 04713 | |
| A75CR7 | 1902-3073 | 8 | 1 | DIODE-ZNR 4.32V 5% DO-35 PD=.4W | 04713 | |
| A75CR8 | 1901-0040 | 1 | 5 | DIODE-SWITCHING 30V 50MA 2NS DO-35 | 9N171 | |
| A75CR9 | 1901-0026 | 3 | | DIODE-PWR RECT 200V 750MA DO-29 | 04713 | |
| A75CR10 | 1901-0026 | 3 | | DIODE-PWR RECT 200V 750MA DO-29 | 04713 | |
| A75CR11 | 1902-0557 | 7 | 2 | DIODE-ZNR 24V 5% PD=1W IR=5UA | 04713 | |
| A75CR12 | 1902-0557 | 7 | | DIODE-ZNR 24V 5% PD=1W IR=5UA | 04713 | |
| A75CR13 | 1901-0040 | 1 | | DIODE-SWITCHING 30V 50MA 2NS DO-35 | 9N171 | |
| A75CR14 | 1901-0026 | 3 | | DIODE-PWR RECT 200V 750MA DO-29 | 04713 | |

See introduction to this section for ordering information
* Indicates one of several possible values installed

## Table 9-3. Replaceable Parts

| Reference Designation | HP Part Number | C D | Qty. | Description | Mfr. Code | Mfr. Part Number |
|---|---|---|---|---|---|---|
| A75CR15 | 1901-0026 | 3 | | DIODE-PWR RECT 200V 750MA DO-29 | 04713 | |
| A75CR16 | 1902-0777 | 3 | 1 | DIODE-ZNR 1N825 6.2V 5% DO-7 PD=.4W | 04713 | |
| A75CR17 | 1902-3205 | 8 | 1 | DIODE-ZNR 15V 5% DO-35 PD=.4W TC=+.057% | 04713 | |
| A75CR18 | 1901-0040 | 1 | | DIODE-SWITCHING 30V 50MA 2NS DO-35 | 9N171 | |
| A75CR19 | 1901-0040 | 1 | | DIODE-SWITCHING 30V 50MA 2NS DO-35 | 9N171 | |
| A75CR20 | 1901-0040 | 1 | | DIODE-SWITCHING 30V 50MA 2NS DO-35 | 9N171 | |
| A75CR21 | 1884-0317 | 7 | 1 | XTR SCR THYR | 66967 | |
| A75F1 | 2110-0004 | 1 | 1 | FUSE .25A 250V NTD 1.25X.25 UL | 75915 | 312.250 |
| A75H1 | 03585-01212 | 6 | 1 | SHTF BRKT-76 HEAT SINK AL | 28480 | 03585-01212 |
| A75H2 | 0340-0162 | 7 | 1 | INSULATOR-XSTR ALUMINUM | 13103 | |
| A75H3 | 03585-01103 | 4 | 1 | SHTF SINK-75 HEAT AL | 28480 | 03585-01103 |
| A75H4 | 0380-0046 | 0 | 2 | SPACER-RVT-ON .375-IN-LG .152-IN-ID | 00866 | |
| A75H5 | 0380-0046 | 0 | | SPACER-RVT-ON .375-IN-LG .152-IN-ID | 00866 | |
| A75H6 | 0590-1054 | 7 | 3 | THREADED INSERT-NUT 6-32 .065-IN-LG SST | 46384 | KFS2-632 |
| A75H7 | 0590-0526 | 6 | 1 | THREADED INSERT-NUT 4-40 .065-IN-LG SST | 46384 | KFS2-440 |
| A75H8 | 0590-1054 | 7 | | THREADED INSERT-NUT 6-32 .065-IN-LG SST | 46384 | KFS2-632 |
| A75H9 | 0590-1054 | 7 | | THREADED INSERT-NUT 6-32 .065-IN-LG SST | 46384 | KFS2-632 |
| A75H10 | 0590-1136 | 6 | 1 | THREADED INSERT-NUT 10-32 .125-IN-LG | 46384 | KFS2-032 |
| A75H11 | 1200-0452 | 3 | 2 | SOCKET-XSTR 2-CONT TO-3 SLDR-EYE | 91506 | 8080-1G1 |
| A75H12 | 1200-0452 | 3 | | SOCKET-XSTR 2-CONT TO-3 SLDR-EYE | 91506 | 8080-1G1 |
| A75H13 | 1251-2551 | 4 | 2 | CONNECTOR-SGL CONT SKT .033-IN-BSC-SZ | 00779 | 332070 |
| A75H14 | 2190-0913 | 9 | 2 | WASHER-LK HLCL NO. 4 .115-IN-ID | 70318 | |
| A75H15 | 2190-0913 | 9 | | WASHER-LK HLCL NO. 4 .115-IN-ID | 70318 | |
| A75H15 | 1251-2551 | 4 | | CONNECTOR-SGL CONT SKT .033-IN-BSC-SZ | 00779 | 332070 |
| A75H16 | 2190-0918 | 4 | 2 | WASHER-LK HLCL NO. 6 .141-IN-ID | 73734 | |
| A75H17 | 1480-0116 | 8 | 1 | PIN-GRV .062-IN-DIA .25-IN-LG STL | 73957 | GP24-063 X 250-14 |
| A75H18 | 2190-0918 | 4 | | WASHER-LK HLCL NO. 6 .141-IN-ID | 73734 | |
| A75H19 | 2200-0169 | 0 | 1 | SCREW-MACH 4-40 .5-IN-LG 82 DEG | 83486 | |
| A75H20 | 2360-0115 | 4 | 2 | SCREW-MACH 6-32 .312-IN-LG PAN-HD-POZI | 83486 | |
| A75H21 | 2260-0002 | 6 | 1 | NUT-HEX-DBL-CHAM 4-40-THD .062-IN-THK | 77250 | |
| A75H22 | 2360-0115 | 4 | | SCREW-MACH 6-32 .312-IN-LG PAN-HD-POZI | 83486 | |
| A75H23 | 2420-0003 | 7 | 1 | NUT-HEX-DBL-CHAM 6-32-THD .094-IN-THK | 70318 | |
| A75H24 | 3050-0066 | 8 | 5 | WASHER-FL MTLC NO. 6 .147-IN-ID | 73734 | 1451 |
| A75H25 | 4040-0753 | 0 | 1 | EXTR-PC BD GRN POLYC .062-IN-BD-THKNS | 28480 | |
| A75H26 | 4040-0755 | 2 | 1 | EXTR-PC BD VIO POLYC .062-IN-BD-THKNS | 28480 | |
| A75H27 | 2360-0195 | 0 | 1 | SCREW-MACH 6-32 .312-IN-LG PAN-HD-POZI | 83486 | |
| A75H28 | 3050-0066 | 8 | | WASHER-FL MTLC NO. 6 .147-IN-ID | 73734 | 1451 |
| A75H29 | 3050-0066 | 8 | | WASHER-FL MTLC NO. 6 .147-IN-ID | 73734 | 1451 |
| A75H30 | 3050-0066 | 8 | | WASHER-FL MTLC NO. 6 .147-IN-ID | 73734 | 1451 |
| A75H31 | 3050-0066 | 8 | | WASHER-FL MTLC NO. 6 .147-IN-ID | 73734 | 1451 |
| A75H32 | 3050-0716 | 5 | 2 | WASHER-FL MTLC NO. 5 .128-IN-ID | 70318 | NAS620-C5 |
| A75H33 | 3050-0716 | 5 | | WASHER-FL MTLC NO. 5 .128-IN-ID | 70318 | NAS620-C5 |
| A75H42 | 8150-4270 | 1 | 1 | JMPR 22GA BLK 50MM 8x8 | 28480 | |
| A75H43 | 8150-4275 | 6 | 1 | JMPR 22GA BLK 75MM 8x8 | 28480 | |
| A75J1 | 1251-3196 | 5 | 1 | CONN-POST TYPE .156-PIN-SPCG 6-CONT | 27264 | 09-60-1081(2403-08A) |
| A75J2 | 1251-3475 | 3 | 1 | CONN-POST TYPE .156-PIN-SPCG 10-CONT | 27264 | 09-60-1101 |
| A75J3 | 1251-3276 | 2 | 1 | CONN-POST TYPE .156-PIN-SPCG 6-CONT | 27264 | 09-60-1061 |
| A75J4 | 1251-3981 | 6 | 1 | CONN-POST TYPE .156-PIN-SPCG 9-CONT | 27264 | 09-60-1091 |
| A75J5 | 1251-3618 | 6 | 2 | CONN-POST TYPE .156-PIN-SPCG 2-CONT | 27264 | 09-60-1021 |
| A75J6 | 1251-4659 | 7 | 1 | CONN-POST TYPE .156-PIN-SPCG 14-CONT | 27264 | 09-60-1141 |
| A75J7 | 1251-3618 | 6 | | CONN-POST TYPE .156-PIN-SPCG 2-CONT | 27264 | 09-60-1021 |
| A75J9 | 1251-3192 | 1 | 1 | CONN-POST TYPE .156-PIN-SPCG 3-CONT | 27264 | 09-60-1031 |
| A75J10 | 1251-3195 | 4 | 1 | CONN-POST TYPE .156-PIN-SPCG 4-CONT | 27264 | 09-60-1041 |
| A75L1 | 9140-0270 | 3 | 1 | INC 200MH | 91637 | IPL-1331-28 |
| A75Q1 | 1854-0216 | 2 | 1 | TRANSISTOR NPN 2N3441 SI TO-66 PD=25W | 09996 | |
| A75Q2 | 1853-0323 | 0 | 1 | TRANSISTOR PNP 2N4900 SI TO-66 PD=25W | 04713 | |
| A75R1 | 0683-2035 | 3 | 1 | RESISTOR 20K 5% .25W CF TC=0-400 | 77902 | R-25J |
| A75R2 | 0764-0042 | 0 | 2 | RESISTOR 2.2K 5% 2W MO TC=0+-200 | 28480 | GS-3 |
| A75R3 | 0683-1005 | 5 | 3 | RESISTOR 10 5% .25W CF TC=0-400 | 77902 | R-25J |
| A75R4 | 0764-0042 | 0 | | RESISTOR 2.2K 5% 2W MO TC=0+-200 | 28480 | GS-3 |
| A75R5 | 0683-1005 | 5 | | RESISTOR 10 5% .25W CF TC=0-400 | 77902 | R-25J |
| A75R6 | 0698-4426 | 1 | 1 | RESISTOR 1.58K 1% .125W F TC=0+-100 | 91637 | CMF-55-1, T-1 |
| A75R7 | 0757-0161 | 9 | 1 | RESISTOR 604 1% .125W F TC=0+-100 | 19701 | SFR25H |
| A75R8 | 0757-0443 | 0 | 1 | RESISTOR 11K 1% .125W F TC=0+-100 | 19701 | SFR25H |
| A75R9 | 2100-3109 | 2 | 1 | RESISTOR-TRMR 2K 10% C SIDE-ADJ 17-TRN | 73138 | 89PR2K |

See introduction to this section for ordering information
* Indicates one of several possible values installed

# Table 9-3. Replaceable Parts

| Reference Designation | HP Part Number | C D | Qty. | Description | Mfr. Code | Mfr. Part Number |
|---|---|---|---|---|---|---|
| A75R10 | 0698-3279 | 0 | 1 | RESISTOR 4.99K 1% .125W F TC=0+-100 | 19701 | SFR25H |
| A75R11 | 0698-6678 | 9 | 2 | RESISTOR 15K .5% .125W F TC=0+-50 | 19701 | 5033R |
| A75R12 | 0698-6678 | 9 | | RESISTOR 15K .5% .125W F TC=0+-50 | 19701 | 5033R |
| A75R13 | 0687-1841 | 5 | 1 | RESISTOR 180K 10% .5W CC TC=0+882 | 01121 | EB1841 |
| A75R14 | 0683-1005 | 5 | | RESISTOR 10 5% .25W CF TC=0-400 | 77902 | R-25J |
| A75R15 | 2100-3056 | 8 | 1 | RESISTOR-TRMR 5K 10% C SIDE-ADJ 17-TRN | 73138 | 89PR5K |
| A75R16 | 0698-4482 | 9 | 1 | RESISTOR 17.4K 1% .125W F TC=0+-100 | 91637 | CMF-55-1, T-1 |
| A75R17 | 0683-1025 | 9 | 3 | RESISTOR 1K 5% .25W CF TC=0-400 | 77902 | R-25J |
| A75R18 | 0757-0455 | 4 | 1 | RESISTOR 36.5K 1% .125W F TC=0+-100 | 19701 | SFR25H |
| A75R19 | 0757-0464 | 5 | 1 | RESISTOR 90.9K 1% .125W F TC=0+-100 | 19701 | SFR25H |
| A75R20 | 0757-0449 | 6 | 1 | RESISTOR 20K 1% .125W F TC=0+-100 | 19701 | SFR25H |
| A75R21 | 0683-1025 | 9 | | RESISTOR 1K 5% .25W CF TC=0-400 | 77902 | R-25J |
| A75R22 | 0683-1025 | 9 | | RESISTOR 1K 5% .25W CF TC=0-400 | 77902 | R-25J |
| A75R23 | 0683-1035 | 1 | 4 | RESISTOR 10K 5% .25W CF TC=0-400 | 77902 | R-25J |
| A75R24 | 0683-1035 | 1 | | RESISTOR 10K 5% .25W CF TC=0-400 | 77902 | R-25J |
| A75R25 | 0683-1035 | 1 | | RESISTOR 10K 5% .25W CF TC=0-400 | 77902 | R-25J |
| A75R26 | 0683-4715 | 0 | 1 | RESISTOR 470 5% .25W CF TC=0-400 | 77902 | R-25J |
| A75R27 | 0683-1035 | 1 | | RESISTOR 10K 5% .25W CF TC=0-400 | 77902 | R-25J |
| A75S1 | 3103-0015 | 0 | 1 | SWITCH-THRM FXD +75C 6A OPN-ON-RISE | 14604 | 3001U-34-82 |
| A75T1 | 9100-4031 | 8 | 1 | TRANSFORMER IND: 2.25 MAY -10%, +50%, DC91637 | 91637 | IPE-1229-10 |
| A75T2 | 9100-3454 | 7 | 1 | TRANSFORMER-ISOLATION VOLTAGE RATIO: 1:100323P01 | 00323P01 | |
| A75TP1 | 0360-0124 | 3 | 2 | CONNECTOR-SGL CONT PIN .04-IN-BSC-SZ RND97300 | 97300 | |
| A75TP2 | 0360-0124 | 3 | | CONNECTOR-SGL CONT PIN .04-IN-BSC-SZ RND97300 | 97300 | |
| A75U1 | 1820-0429 | 8 | 1 | IC V RGLTR-FXD-POS 4.8/5.2V TO-39 PKG | 27014 | |
| A75U2 | 1826-0220 | 9 | 1 | IC V RGLTR-FXD-NEG 4.8/5.2V TO-39 PKG | 27014 | |
| A75U3 | 1820-0203 | 6 | 2 | IC OP AMP GP TO-99 PKG | 04550P03 | |
| A75U4 | 1820-0203 | 6 | | IC OP AMP GP TO-99 PKG | 04550P03 | |
| A75U5 | 1826-0065 | 0 | 1 | IC COMPARATOR PRCN 8-DIP-P PKG | 27014 | |
| A75U6 | 1820-1201 | 6 | 1 | IC GATE TTL LS AND QUAD 2-INP | 01295 | |
| A75W1 | 8150-4347 | 3 | 2 | JMPR 22GA ORN 75MM 8x8 | 28480 | |
| A75W2 | 8150-4363 | 3 | 1 | JMPR 22GA YEL 50MM 8x8 | 28480 | |
| A75W2 | 8150-4419 | 0 | 1 | JMPR 22GA BLU 75MM 8x8 | 28480 | |
| A75W3 | 8150-4394 | 0 | 1 | JMPR 22GA GRN 75MM 8x8 | 28480 | |
| A75W4 | 8150-4325 | 7 | 1 | JMPR 22GA RED 100MM 8x8 | 28480 | |
| A75W5 | 8150-4492 | 9 | 1 | JMPR 22GA WHT 75MM 8x8 | 28480 | |
| A75W6 | 8150-4321 | 3 | 1 | JMPR 22GA RED 75MM 8x8 | 28480 | |
| A75W7 | 8150-4347 | 3 | | JMPR 22GA ORN 75MM 8x8 | 28480 | |
| A75X1 | 2110-0269 | 0 | 2 | FUSEHOLDER-CLIP TYPE.25D-FUSE | 13060 | |
| A75X2 | 2110-0269 | 0 | | FUSEHOLDER-CLIP TYPE.25D-FUSE | 13060 | |
| | 4330-0496 | 3 | 2 | INSULATOR-BEAD GLASS | 53101 | KG12 |
| | 7121-4611 | 2 | 1 | LABEL-INFORMATION .15-IN-WD .6-IN-LG | 28480 | L01003 |
| **A77** | **03585-66577** | **2** | **1** | **AC-PROTECTION PC BD ASSEMBLY** | **28480** | **03585-66577** |
| A77C1 | 0160-5269 | 3 | 1 | CAPACITOR-FXD .047UF +-10% 50VDC CER | 04222 | SR265C473KAA |
| A77C2 | 0160-4603 | 7 | 1 | CAPACITOR-FXD 1UF +-20% 200VDC MET-POLYP15766 | 15766 | HEW-363 |
| A77H1 | 0380-0046 | 0 | 3 | SPACER-RVT-ON .375-IN-LG .152-IN-ID | 00866 | |
| A77H2 | 0380-0046 | 0 | | SPACER-RVT-ON .375-IN-LG .152-IN-ID | 00866 | |
| A77H3 | 0380-0046 | 0 | | SPACER-RVT-ON .375-IN-LG .152-IN-ID | 00866 | |
| A77H4 | 2190-0027 | 6 | 1 | WASHER-LK INTL T 1/4 IN .256-IN-ID | 73734 | |
| A77H5 | 2950-0134 | 8 | 1 | NUT-HEX-DBL-CHAM 1/4-28-THD .125-IN-THK | 70318 | |
| A77H8 | 4330-0952 | 6 | 4 | INSULATOR-BEAD CERAMIC | 25706 | 10-215A |
| A77H9 | 4330-0952 | 6 | | INSULATOR-BEAD CERAMIC | 25706 | 10-215A |
| A77H10 | 4330-0952 | 6 | | INSULATOR-BEAD CERAMIC | 25706 | 10-215A |
| A77H11 | 4330-0952 | 6 | | INSULATOR-BEAD CERAMIC | 25706 | 10-215A |
| A77Q1 | 1884-0329 | 1 | 1 | XTR TRIAC THYR | 04713 | |
| A77Q2 | 1884-0270 | 1 | 1 | THYRISTOR-TRIAC 2N5569 | 04713 | |
| A77R1 | 0698-4493 | 2 | 1 | RESISTOR 34K 1% .125W F TC=0+-100 | 91637 | CMF-55-1, T-1 |
| A77R2 | 0698-4442 | 1 | 1 | RESISTOR 4.42K 1% .125W F TC=0+-100 | 91637 | CMF-55-1, T-1 |
| A77R3 | 0757-0454 | 3 | 1 | RESISTOR 33.2K 1% .125W F TC=0+-100 | 19701 | SFR25H |
| A77W1 | 8150-4547 | 5 | 2 | JMPR 18GA GRN 100MM 8x8 | 28480 | |
| A77W2 | 8150-4547 | 5 | | JMPR 18GA GRN 100MM 8x8 | 28480 | |
| A77W3 | 8150-4546 | 4 | 1 | JMPR 18GA GRN 75MM 8x8 | 28480 | |
| A77W4 | 8150-4342 | 8 | 1 | JMPR 22GA ORN 50MM 8x8 | 28480 | |

See introduction to this section for ordering information
* Indicates one of several possible values installed

# Table 9-3. Replaceable Parts

| Reference Designation | HP Part Number | C D | Qty. | Description | Mfr. Code | Mfr. Part Number |
|---|---|---|---|---|---|---|
| | 7121-4611 | 2 | 1 | LABEL-INFORMATION .15-IN-WD .6-IN-LG | 28480 | L01003 |
| **A80** | **03585-66580** | **7** | **1** | **MOTHER BOARD PC BD ASSEMBLY** | **28480** | **03585-66580** |
| A80H5 | 1200-0521 | 7 | 1 | CON-SKT IC | 52072 | CA-24-200-DL |
| A80H6 | 1200-0547 | 7 | 2 | CON-CLIP | 52072 | CA-14-200-DL |
| A80H7 | 1200-0547 | 7 | | CON-CLIP | 52072 | CA-14-200-DL |
| A80J1 | 1251-3475 | 3 | 1 | CONN-POST TYPE .156-PIN-SPCG 10-CONT | 27264 | 09-60-1101 |
| A80J2 | 1200-0888 | 9 | 1 | SOCKET-IC 24-CONT DIP DIP-SLDR | 52072 | CA-24S-10SD |
| A80J3 | 1200-0548 | 8 | 2 | SOCKET-IC 14-CONT DIP DIP-SLDR | 52072 | CA-14S-10SD |
| A80J4 | 1200-0548 | 8 | | SOCKET-IC 14-CONT DIP DIP-SLDR | 52072 | CA-14S-10SD |
| A80J82 | 1251-5157 | 2 | 4 | CONNECTOR-PC EDGE 43-CONT/ROW 2-ROWS | 54453 | EXM 43 DRXN |
| A80J83 | 1251-5157 | 2 | | CONNECTOR-PC EDGE 43-CONT/ROW 2-ROWS | 54453 | EXM 43 DRXN |
| A80J85 | 1251-5157 | 2 | | CONNECTOR-PC EDGE 43-CONT/ROW 2-ROWS | 54453 | EXM 43 DRXN |
| A80J86 | 1251-5157 | 2 | | CONNECTOR-PC EDGE 43-CONT/ROW 2-ROWS | 54453 | EXM 43 DRXN |
| **A81** | **03585-66581** | **8** | **1** | **OCSILLATOR OVEN PC BD ASSEMBLY** | **28480** | **03585-66581** |
| A81C1 | 0180-1794 | 3 | 1 | CAPACITOR-FXD 22UF+-10% 35VDC TA | 13606 | 150D226X9035R2-DYS |
| A81C2 | 0160-3847 | 9 | 1 | CAPACITOR-FXD .01UF +100-0% 50VDC CER | 04222 | SA105C103KAA |
| A81C3 | 0160-2222 | 2 | 2 | CAPACITOR-FXD 1500PF +-5% 300VDC MICA | 00853 | |
| A81C4 | 0160-2222 | 2 | | CAPACITOR-FXD 1500PF +-5% 300VDC MICA | 00853 | |
| A81H1 | 03585-04132 | 5 | 1 | SHTF NSLTR-OVEN PLCR | 28480 | 03585-04132 |
| A81H2 | 0380-0993 | 6 | 5 | SPACER-RVT-ON .188-IN-LG .152-IN-ID | 28480 | |
| A81H3 | 0380-0993 | 6 | | SPACER-RVT-ON .188-IN-LG .152-IN-ID | 28480 | |
| A81H4 | 0380-0993 | 6 | | SPACER-RVT-ON .188-IN-LG .152-IN-ID | 28480 | |
| A81H5 | 0380-0993 | 6 | | SPACER-RVT-ON .188-IN-LG .152-IN-ID | 28480 | |
| A81H6 | 0380-0993 | 6 | | SPACER-RVT-ON .188-IN-LG .152-IN-ID | 28480 | |
| A81J1 | 1250-1810 | 4 | 1 | CONNECTOR-RF SMB M PC 50-OHM | 98291 | 51-353-0049 |
| A81J2 | 1251-4795 | 2 | 1 | CONN-POST TYPE .156-PIN-SPCG 2-CONT | 27264 | 26-48-1024 |
| A81L1 | 9100-1618 | 1 | 1 | INDUCTOR RF-CH-MLD 5.6UH 10% | 99800 | 1537-30 |
| A81L2 | 9100-2486 | 3 | 1 | INDUCTOR RF-CH-MLD 330NH 5% .166DX.385LG24226 | 24226 | 15M330J |
| A81Q1 | 1853-0020 | 4 | 1 | TRANSISTOR PNP SI PD=300MW FT=150MHZ | 04713 | |
| A81R1 | 0757-0442 | 9 | 1 | RESISTOR 10K 1% .125W F TC=0+-100 | 19701 | SFR25H |
| A81R2 | 2100-3207 | 1 | 1 | RESISTOR-TRMR 5K 10% C SIDE-ADJ 1-TRN | 32997 | 3386X-Y46-502 |
| A81R3 | 0683-2225 | 3 | 1 | RESISTOR 2.2K 5% .25W CF TC=0-400 | 77902 | R-25J |
| A81R4 | 0683-4705 | 8 | 2 | RESISTOR 47 5% .25W CF TC=0-400 | 77902 | R-25J |
| A81R6 | 0683-4705 | 8 | | RESISTOR 47 5% .25W CF TC=0-400 | 77902 | R-25J |
| A81R7 | 0698-3279 | 0 | 1 | RESISTOR 4.99K 1% .125W F TC=0+-100 | 19701 | SFR25H |
| A81R8 | 0757-0449 | 6 | 2 | RESISTOR 20K 1% .125W F TC=0+-100 | 19701 | SFR25H |
| A81R9 | 2100-3351 | 6 | 1 | RESISTOR-TRMR 500 10% C SIDE-ADJ 1-TRN | 32997 | 3386X-Y46-501 |
| A81R10 | 0698-4442 | 1 | 1 | RESISTOR 4.42K 1% .125W F TC=0+-100 | 91637 | CMF-55-1, T-1 |
| A81R11 | 0757-0449 | 6 | | RESISTOR 20K 1% .125W F TC=0+-100 | 19701 | SFR25H |
| A81R12 | 0683-1055 | 5 | 1 | RESISTOR 1M 5% .25W CF TC=0-800 | 77902 | R-25J |
| A81U1 | 0960-0465 | 7 | 1 | OSC OCXO 10MHZ VCONT TTL * 15V | 12020 | OSC 73-52 |
| A81U2 | 1826-0026 | 3 | 1 | IC COMPARATOR PRCN TO-99 PKG | 27014 | |
| | 2200-0103 | 2 | 3 | SCREW-MACH 4-40 .25-IN-LG PAN-HD-POZI | 83486 | |
| | 7121-4611 | 2 | 1 | LABEL-INFORMATION .15-IN-WD .6-IN-LG | 28480 | L01003 |
| **A82** | **03585-66582** | **9** | **1** | **PROCESSOR PC BD ASSEMBLY** | **28480** | **03585-66582** |
| A82B101 | 1420-0278 | 7 | 1 | BATTERY 2.9V .72A-HR LI/S-DIOX W-FLEX | 55002 | B9511 |
| A82C1 | 0180-0228 | 6 | 4 | CAPACITOR-FXD 22UF+-10% 15VDC TA | 13606 | 150D226X9015B2-DYS |
| A82C2 | 0160-4571 | 8 | 6 | CAPACITOR-FXD .1UF +80-20% 50VDC CER | 04222 | SA105E104ZAA |
| A82C3 | 0160-4571 | 8 | | CAPACITOR-FXD .1UF +80-20% 50VDC CER | 04222 | SA105E104ZAA |
| A82C101 | 0160-3334 | 9 | 36 | CAPACITOR-FXD .01UF +-10% 50VDC CER | 04222 | SA105C103KAA |
| A82C102 | 0160-3334 | 9 | | CAPACITOR-FXD .01UF +-10% 50VDC CER | 04222 | SA105C103KAA |
| A82C103 | 0160-3334 | 9 | | CAPACITOR-FXD .01UF +-10% 50VDC CER | 04222 | SA105C103KAA |
| A82C104 | 0160-3334 | 9 | | CAPACITOR-FXD .01UF +-10% 50VDC CER | 04222 | SA105C103KAA |
| A82C105 | 0160-3334 | 9 | | CAPACITOR-FXD .01UF +-10% 50VDC CER | 04222 | SA105C103KAA |
| A82C106 | 0160-3334 | 9 | | CAPACITOR-FXD .01UF +-10% 50VDC CER | 04222 | SA105C103KAA |
| A82C107 | 0160-3334 | 9 | | CAPACITOR-FXD .01UF +-10% 50VDC CER | 04222 | SA105C103KAA |
| A82C108 | 0160-3334 | 9 | | CAPACITOR-FXD .01UF +-10% 50VDC CER | 04222 | SA105C103KAA |
| A82C109 | 0160-3334 | 9 | | CAPACITOR-FXD .01UF +-10% 50VDC CER | 04222 | SA105C103KAA |
| A82C110 | 0160-3334 | 9 | | CAPACITOR-FXD .01UF +-10% 50VDC CER | 04222 | SA105C103KAA |
| A82C111 | 0160-3334 | 9 | | CAPACITOR-FXD .01UF +-10% 50VDC CER | 04222 | SA105C103KAA |

See introduction to this section for ordering information
* Indicates one of several possible values installed

## Table 9-3. Replaceable Parts

| Reference Designation | HP Part Number | C D | Qty. | Description | Mfr. Code | Mfr. Part Number |
|---|---|---|---|---|---|---|
| A82C112 | 0160-3334 | 9 | | CAPACITOR-FXD .01UF +-10% 50VDC CER | 04222 | SA105C103KAA |
| A82C113 | 0160-3334 | 9 | | CAPACITOR-FXD .01UF +-10% 50VDC CER | 04222 | SA105C103KAA |
| A82C114 | 0160-3334 | 9 | | CAPACITOR-FXD .01UF +-10% 50VDC CER | 04222 | SA105C103KAA |
| A82C115 | 0160-3334 | 9 | | CAPACITOR-FXD .01UF +-10% 50VDC CER | 04222 | SA105C103KAA |
| A82C116 | 0160-3334 | 9 | | CAPACITOR-FXD .01UF +-10% 50VDC CER | 04222 | SA105C103KAA |
| A82C117 | 0160-3334 | 9 | | CAPACITOR-FXD .01UF +-10% 50VDC CER | 04222 | SA105C103KAA |
| A82C118 | 0160-3334 | 9 | | CAPACITOR-FXD .01UF +-10% 50VDC CER | 04222 | SA105C103KAA |
| A82C119 | 0160-3334 | 9 | | CAPACITOR-FXD .01UF +-10% 50VDC CER | 04222 | SA105C103KAA |
| A82C120 | 0160-3334 | 9 | | CAPACITOR-FXD .01UF +-10% 50VDC CER | 04222 | SA105C103KAA |
| A82C121 | 0160-3334 | 9 | | CAPACITOR-FXD .01UF +-10% 50VDC CER | 04222 | SA105C103KAA |
| A82C122 | 0160-3334 | 9 | | CAPACITOR-FXD .01UF +-10% 50VDC CER | 04222 | SA105C103KAA |
| A82C123 | 0160-3334 | 9 | | CAPACITOR-FXD .01UF +-10% 50VDC CER | 04222 | SA105C103KAA |
| A82C124 | 0160-3334 | 9 | | CAPACITOR-FXD .01UF +-10% 50VDC CER | 04222 | SA105C103KAA |
| A82C125 | 0160-3334 | 9 | | CAPACITOR-FXD .01UF +-10% 50VDC CER | 04222 | SA105C103KAA |
| A82C126 | 0160-3334 | 9 | | CAPACITOR-FXD .01UF +-10% 50VDC CER | 04222 | SA105C103KAA |
| A82C127 | 0160-3334 | 9 | | CAPACITOR-FXD .01UF +-10% 50VDC CER | 04222 | SA105C103KAA |
| A82C128 | 0160-3334 | 9 | | CAPACITOR-FXD .01UF +-10% 50VDC CER | 04222 | SA105C103KAA |
| A82C129 | 0160-3334 | 9 | | CAPACITOR-FXD .01UF +-10% 50VDC CER | 04222 | SA105C103KAA |
| A82C130 | 0160-3334 | 9 | | CAPACITOR-FXD .01UF +-10% 50VDC CER | 04222 | SA105C103KAA |
| A82C131 | 0160-3334 | 9 | | CAPACITOR-FXD .01UF +-10% 50VDC CER | 04222 | SA105C103KAA |
| A82C132 | 0160-3334 | 9 | | CAPACITOR-FXD .01UF +-10% 50VDC CER | 04222 | SA105C103KAA |
| A82C133 | 0160-3334 | 9 | | CAPACITOR-FXD .01UF +-10% 50VDC CER | 04222 | SA105C103KAA |
| A82C134 | 0160-4571 | 8 | | CAPACITOR-FXD .1UF +80-20% 50VDC CER | 04222 | SA105E104ZAA |
| A82C135* | 0160-4788 | 9 | 1 | CAPACITOR-FXD 18PF +-5% 100VDC CER 0+-3004222 | 04222 | SA101A180JAA |
| A82C135* | 0160-4787 | 8 | 0 | CAPACITOR-FXD 22PF +-5% 100VDC CER 0+-3004222 | 04222 | SA106A220JAA |
| A82C135* | 0160-5412 | 8 | 0 | CAPACITOR-FXD 16PF +-5% 100VDC CER 0+-3028480 | 28480 | RPA10COG160J100 |
| A82C135* | 0160-5699 | 3 | 0 | CAPACITOR-FXD 20PF +-5% 100VDC CER 0+-3028480 | 28480 | 0160-5699 |
| A82C136 | 0160-4808 | 4 | 2 | CAPACITOR-FXD 470PF +-5% 100VDC CER | 04222 | SA101A471JAA |
| A82C137 | 0160-4808 | 4 | | CAPACITOR-FXD 470PF +-5% 100VDC CER | 04222 | SA101A471JAA |
| A82C138 | 0180-0228 | 6 | | CAPACITOR-FXD 22UF+-10% 15VDC TA | 13606 | 150D226X9015B2-DYS |
| A82C139 | 0160-4571 | 8 | | CAPACITOR-FXD .1UF +80-20% 50VDC CER | 04222 | SA105E104ZAA |
| A82C140 | 0160-4571 | 8 | | CAPACITOR-FXD .1UF +80-20% 50VDC CER | 04222 | SA105E104ZAA |
| A82C141 | 0160-3334 | 9 | | CAPACITOR-FXD .01UF +-10% 50VDC CER | 04222 | SA105C103KAA |
| A82C142 | 0180-0228 | 6 | | CAPACITOR-FXD 22UF+-10% 15VDC TA | 13606 | 150D226X9015B2-DYS |
| A82C143 | 0160-3334 | 9 | | CAPACITOR-FXD .01UF +-10% 50VDC CER | 04222 | SA105C103KAA |
| A82C144 | 0160-3334 | 9 | | CAPACITOR-FXD .01UF +-10% 50VDC CER | 04222 | SA105C103KAA |
| A82C145 | 0160-4571 | 8 | | CAPACITOR-FXD .1UF +80-20% 50VDC CER | 04222 | SA105E104ZAA |
| A82C146 | 0180-0228 | 6 | | CAPACITOR-FXD 22UF+-10% 15VDC TA | 13606 | 150D226X9015B2-DYS |
| A82CR1 | 1901-0040 | 1 | 6 | DIODE-SWITCHING 30V 50MA 2NS DO-35 | 9N171 | |
| A82CR2 | 1901-0040 | 1 | | DIODE-SWITCHING 30V 50MA 2NS DO-35 | 9N171 | |
| A82CR3 | 1901-0040 | 1 | | DIODE-SWITCHING 30V 50MA 2NS DO-35 | 9N171 | |
| A82CR101 | 1990-1123 | 0 | 1 | OPT LED LMP R AP LMP1301 TT1H | 28480 | 1990-1123 |
| A82CR102 | 1901-0518 | 8 | 2 | DIODE-SCHOTTKY SM SIG | 28480 | 1901-0518 |
| A82CR103 | 1901-0518 | 8 | | DIODE-SCHOTTKY SM SIG | 28480 | 1901-0518 |
| A82CR104 | 1901-0040 | 1 | | DIODE-SWITCHING 30V 50MA 2NS DO-35 | 9N171 | |
| A82CR105 | 1901-0040 | 1 | | DIODE-SWITCHING 30V 50MA 2NS DO-35 | 9N171 | |
| A82CR106 | 1901-0040 | 1 | | DIODE-SWITCHING 30V 50MA 2NS DO-35 | 9N171 | |
| A82J1 | 1250-1810 | 4 | 2 | CONNECTOR-RF SMB M PC 50-OHM | 98291 | 51-353-0049 |
| A82J3 | 1250-1810 | 4 | | CONNECTOR-RF SMB M PC 50-OHM | 98291 | 51-353-0049 |
| A82J98 | 1460-2201 | 4 | 8 | WFRM ROLLED TEST POINT | L0121P01 | 1460-2201 |
| A82L1 | 9100-3334 | 2 | 2 | INDUCTOR 25UH 10% .3D | 99484 | ES-2638 |
| A82L101 | 9100-3334 | 2 | | INDUCTOR 25UH 10% .3D | 99484 | ES-2638 |
| A82MP1 | 4040-0747 | 2 | 1 | EXTR-PC BD GRA POLYC .062-IN-BD-THKNS | 28480 | |
| A82MP2 | 4040-0750 | 7 | 1 | EXTR-PC BD RED POLYC .062-IN-BD-THKNS | 28480 | |
| A82MP3 | 1400-0249 | 0 | 1 | CABLE TIE .062-.625-DIA .091-WD NYL | 56501 | TY-23M-8 |
| A82Q1 | 1854-0215 | 1 | 1 | TRANSISTOR NPN SI PD=350MW FT=300MHZ | 04713 | |
| A82Q101 | 1853-0563 | 0 | 1 | XTR SML1PNP SI 2N3906 TXXXX | 04713 | |
| A82Q102 | 1854-1139 | 0 | 1 | XTR SML1NPN | 04713 | SPS8028RL |
| A82Q103 | 1853-0398 | 9 | 1 | TRANSISTOR PNP SI PD=15W FT=65MHZ | 04713 | |
| A82Q104 | 1854-1028 | 6 | 1 | TRANSISTOR NPN SI PD=350MW FT=300MHZ | 04713 | |
| A82Q105 | 1854-1024 | 2 | 1 | TRANSISTOR NPN SI PD=300MW FT=200MHZ | 04713 | |
| A82R1 | 0683-1825 | 7 | 7 | RESISTOR 1.8K 5% .25W CF TC=0-400 | 77902 | R-25J |
| A82R2 | 0683-1825 | 7 | | RESISTOR 1.8K 5% .25W CF TC=0-400 | 77902 | R-25J |
| A82R3 | 0683-1025 | 9 | 7 | RESISTOR 1K 5% .25W CF TC=0-400 | 77902 | R-25J |
| A82R4 | 0683-1035 | 1 | 9 | RESISTOR 10K 5% .25W CF TC=0-400 | 77902 | R-25J |

See introduction to this section for ordering information
* Indicates one of several possible values installed

# Table 9-3. Replaceable Parts

| Reference Designation | HP Part Number | C D | Qty. | Description | Mfr. Code | Mfr. Part Number |
|---|---|---|---|---|---|---|
| A82R5 | 0683-1035 | 1 | | RESISTOR 10K 5% .25W CF TC=0-400 | 77902 | R-25J |
| A82R6 | 0683-1015 | 7 | 4 | RESISTOR 100 5% .25W CF TC=0-400 | 77902 | R-25J |
| A82R7 | 0683-1035 | 1 | | RESISTOR 10K 5% .25W CF TC=0-400 | 77902 | R-25J |
| A82R8 | 0683-1035 | 1 | | RESISTOR 10K 5% .25W CF TC=0-400 | 77902 | R-25J |
| A82R9 | 0683-1015 | 7 | | RESISTOR 100 5% .25W CF TC=0-400 | 77902 | R-25J |
| A82R10 | 0683-1015 | 7 | | RESISTOR 100 5% .25W CF TC=0-400 | 77902 | R-25J |
| A82R101 | 0683-1025 | 9 | | RESISTOR 1K 5% .25W CF TC=0-400 | 77902 | R-25J |
| A82R102 | 0683-1035 | 1 | | RESISTOR 10K 5% .25W CF TC=0-400 | 77902 | R-25J |
| A82R103 | 0683-1025 | 9 | | RESISTOR 1K 5% .25W CF TC=0-400 | 77902 | R-25J |
| A82R104 | 0683-4315 | 6 | 1 | RESISTOR 430 5% .25W CF TC=0-400 | 77902 | R-25J |
| A82R105 | 0683-1035 | 1 | | RESISTOR 10K 5% .25W CF TC=0-400 | 77902 | R-25J |
| A82R106 | 0683-1015 | 7 | | RESISTOR 100 5% .25W CF TC=0-400 | 77902 | R-25J |
| A82R107 | 0698-4424 | 9 | 1 | RESISTOR 1.4K 1% .125W F TC=0+-100 | 91637 | CMF-55-1, T-1 |
| A82R108 | 0698-3495 | 2 | 1 | RESISTOR 866 1% .125W F TC=0+-100 | 19701 | SFR25H |
| A82R109 | 0757-0281 | 4 | 1 | RESISTOR 2.74K 1% .125W F TC=0+-100 | 19701 | SFR25H |
| A82R110 | 0683-1825 | 7 | | RESISTOR 1.8K 5% .25W CF TC=0-400 | 77902 | R-25J |
| A82R111 | 0683-1025 | 9 | | RESISTOR 1K 5% .25W CF TC=0-400 | 77902 | R-25J |
| A82R112 | 0683-1825 | 7 | | RESISTOR 1.8K 5% .25W CF TC=0-400 | 77902 | R-25J |
| A82R113 | 0683-7515 | 4 | 1 | RESISTOR 750 5% .25W CF TC=0-400 | 77902 | R-25J |
| A82R114 | 0683-2725 | 8 | 3 | RESISTOR 2.7K 5% .25W CF TC=0-400 | 77902 | R-25J |
| A82R115 | 0683-1525 | 4 | 1 | RESISTOR 1.5K 5% .25W CF TC=0-400 | 77902 | R-25J |
| A82R116 | 0683-1025 | 9 | | RESISTOR 1K 5% .25W CF TC=0-400 | 77902 | R-25J |
| A82R117 | 0683-1035 | 1 | | RESISTOR 10K 5% .25W CF TC=0-400 | 77902 | R-25J |
| A82R118 | 0683-1035 | 1 | | RESISTOR 10K 5% .25W CF TC=0-400 | 77902 | R-25J |
| A82R119 | 0683-1825 | 7 | | RESISTOR 1.8K 5% .25W CF TC=0-400 | 77902 | R-25J |
| A82R120 | 0683-2215 | 1 | 1 | RESISTOR 220 5% .25W CF TC=0-400 | 77902 | R-25J |
| A82R121 | 0683-1035 | 1 | | RESISTOR 10K 5% .25W CF TC=0-400 | 77902 | R-25J |
| A82R122 | 0683-1025 | 9 | | RESISTOR 1K 5% .25W CF TC=0-400 | 77902 | R-25J |
| A82R123 | 0683-1025 | 9 | | RESISTOR 1K 5% .25W CF TC=0-400 | 77902 | R-25J |
| A82R124 | 0683-1825 | 7 | | RESISTOR 1.8K 5% .25W CF TC=0-400 | 77902 | R-25J |
| A82R126 | 0683-1825 | 7 | | RESISTOR 1.8K 5% .25W CF TC=0-400 | 77902 | R-25J |
| A82R127 | 0683-2725 | 8 | | RESISTOR 2.7K 5% .25W CF TC=0-400 | 77902 | R-25J |
| A82R128 | 0683-2725 | 8 | | RESISTOR 2.7K 5% .25W CF TC=0-400 | 77902 | R-25J |
| A82R129 | 8159-0005 | 0 | 1 | RESISTOR-ZERO OHMS 22 AWG LEAD DIA | 20940 | 106 |
| A82RN1 | 1810-0286 | 4 | 1 | NETWORK-RES 16-DIP 10.0K OHM X 15 | 11236 | 761-1-R10K |
| A82RN101 | 1810-0162 | 5 | 1 | NETWORK-RES 14-DIP 4.7K OHM X 13 | 11236 | 760-1-R4.7K |
| A82SP101 | 0960-0483 | 9 | 1 | ALRM-AUDIBLE | 43744 | |
| A82SW101 | 3101-2215 | 2 | 1 | SWITCH-RKR DIP-RKR-ASSY 7-1A .05A 30VDC | 81073 | 76PSB07S |
| A82T1 | 9100-3287 | 4 | 1 | TRANSFORMER-ISOLATION 1:1 TURN RATIO | 91637 | ITU-1229-2 |
| A82TP1 | 1460-2201 | 4 | | WFRM ROLLED TEST POINT | L0121P01 | 1460-2201 |
| A82TP2 | 1460-2201 | 4 | | WFRM ROLLED TEST POINT | L0121P01 | 1460-2201 |
| A82TP3 | 1460-2201 | 4 | | WFRM ROLLED TEST POINT | L0121P01 | 1460-2201 |
| A82TP4 | 1460-2201 | 4 | | WFRM ROLLED TEST POINT | L0121P01 | 1460-2201 |
| A82TP5 | 1460-2201 | 4 | | WFRM ROLLED TEST POINT | L0121P01 | 1460-2201 |
| A82TP101 | 1460-2201 | 4 | | WFRM ROLLED TEST POINT | L0121P01 | 1460-2201 |
| A82TP102 | 1460-2201 | 4 | | WFRM ROLLED TEST POINT | L0121P01 | 1460-2201 |
| A82U1 | 1820-2657 | 8 | 2 | IC GATE TTL ALS OR QUAD 2-INP | 01295 | |
| A82U2 | 1820-2656 | 7 | 3 | IC GATE TTL ALS NAND QUAD 2-INP | 01295 | |
| A82U3 | 1820-4570 | 8 | 1 | ICM MPU 68000-10 NMOS 16B P64 | 04713 | |
| A82U4 | 1820-2657 | 8 | | IC GATE TTL ALS OR QUAD 2-INP | 01295 | |
| A82U5 | 1820-2656 | 7 | | IC GATE TTL ALS NAND QUAD 2-INP | 01295 | |
| A82U6 | 1820-2861 | 6 | 1 | IC DCDR TTL F 3-TO-8-LINE | 18324 | |
| A82U7 | 1820-2684 | 1 | 1 | IC GATE TTL F NAND QUAD 2-INP | 18324 | |
| A82U8 | 1820-3465 | 8 | 2 | IC FF TTL ALS D-TYPE POS-EDGE-TRIG COM | 01295 | |
| A82U9 | 1820-2691 | 0 | 2 | IC FF TTL F D-TYPE POS-EDGE-TRIG | 18324 | |
| A82U10 | 03585-60332 | 5 | 1 | RAM % DTACK PAL | 28480 | 03585-60332 |
| A82U11 | 03585-60330 | 3 | 1 | PGM EPROM 1818-4460 | 28480 | 03585-60330 |
| A82U12 | 03585-60331 | 4 | 1 | PGM EPROM 1818-4460 | 28480 | 03585-60331 |
| A82U13 | 1820-3160 | 0 | 2 | IC CNTR TTL LS BIN SYNCHRO POS-EDGE-TRIG01295 | 01295 | |
| A82U14 | 1820-3160 | 0 | | IC CNTR TTL LS BIN SYNCHRO POS-EDGE-TRIG01295 | 01295 | |
| A82U15 | 1820-3707 | 1 | 2 | ICD ALS 74ALS541 OC BUF P20 | 01295 | |
| A82U16 | 1820-3707 | 1 | | ICD ALS 74ALS541 OC BUF P20 | | |
| A82U17 | 1818-4228 | 8 | 2 | ICM SRAM 62256 32KX8 120NS P28 | 54013 | |
| A82U18 | 1818-4228 | 8 | | ICM SRAM 62256 32KX8 120NS P28 | 54013 | |
| A82U19 | 1820-2757 | 9 | 2 | IC FF TTL ALS D-TYPE POS-EDGE-TRIG OCTL | 01295 | |

See introduction to this section for ordering information
* Indicates one of several possible values installed

# Table 9-3. Replaceable Parts

| Reference Designation | HP Part Number | C D | Qty. | Description | Mfr. Code | Mfr. Part Number |
|---|---|---|---|---|---|---|
| A82U20 | 1820-2757 | 9 | | IC FF TTL ALS D-TYPE POS-EDGE-TRIG OCTL | 01295 | |
| A82U21 | 1820-3287 | 2 | 4 | IC TRANSCEIVER TTL ALS BUS OCTL | 01295 | |
| A82U22 | 1820-3287 | 2 | | IC TRANSCEIVER TTL ALS BUS OCTL | 01295 | |
| A82U23 | 1820-2634 | 1 | 3 | IC INV TTL ALS HEX | 01295 | |
| A82U101 | 1826-1054 | 9 | 1 | IC PL LOOP 16-DIP-P PKG | 18324 | |
| A82U102 | 1820-2691 | 0 | | IC FF TTL F D-TYPE POS-EDGE-TRIG | 18324 | |
| A82U103 | 1820-2096 | 9 | 1 | IC CNTR TTL LS BIN DUAL 4-BIT | 01295 | |
| A82U104 | 1826-1245 | 0 | 2 | ICL VREG 7702 | 01295 | |
| A82U105 | 1826-1245 | 0 | | ICL VREG 7702 | 01295 | |
| A82U106 | 1820-4581 | 1 | 1 | ICM MSUP 68901 NMOS MFP P48 | 04713 | |
| A82U107 | 1820-2634 | 1 | | IC INV TTL ALS HEX | 01295 | |
| A82U108 | 1820-3287 | 2 | | IC TRANSCEIVER TTL ALS BUS OCTL | 01295 | |
| A82U109 | 1820-3287 | 2 | | IC TRANSCEIVER TTL ALS BUS OCTL | 01295 | |
| A82U110 | 1990-0461 | 7 | 1 | OPTO-ISOLATOR LED-IC GATE IF=10MA-MAX | 28480 | 1990-0461 |
| A82U111 | 1820-2634 | 1 | | IC INV TTL ALS HEX | 01295 | |
| A82U112 | 1820-2635 | 2 | 1 | IC GATE TTL ALS AND QUAD 2-INP | 01295 | |
| A82U113 | 1820-2656 | 7 | | IC GATE TTL ALS NAND QUAD 2-INP | 01295 | |
| A82U114 | 1820-3465 | 8 | | IC FF TTL ALS D-TYPE POS-EDGE-TRIG COM | 01295 | |
| A82U115 | 1820-3104 | 2 | 1 | IC SHF-RGTR TTL ALS MULTI-MODE | 01295 | |
| A82U116 | 1820-2548 | 6 | 1 | IC-GENERAL PURPOSE INTERFACE BUS ADAPTER01295 | 01295 | |
| A82U117 | 1820-3513 | 7 | 1 | IC TRANSCEIVER TTL S INSTR-BUS IEEE-488 | 27014 | |
| A82U118 | 1820-3431 | 8 | 1 | IC TRANSCEIVER TTL S INSTR-BUS IEEE-488 | 27014 | |
| A82XU11 | 1200-0567 | 1 | 2 | SOCKET-IC 28-CONT DIP DIP-SLDR | 09922 | DILB28P-308T |
| A82XU12 | 1200-0567 | 1 | | SOCKET-IC 28-CONT DIP DIP-SLDR | 09922 | DILB28P-308T |
| | 2190-0363 | 3 | 2 | WASHER-FL NM NO. 2 .09-IN-ID .15-IN-OD | 34114 | 2-1185108 |
| **A83** | **03585-66583** | **0** | **1** | **IO PC BD ASSEMBLY** | **28480** | **03585-66583** |
| A83C1 | 0180-0228 | 6 | 2 | CAPACITOR-FXD 22UF+-10% 15VDC TA | 13606 | 150D226X9015B2-DYS |
| A83C2 | 0160-4571 | 8 | 5 | CAPACITOR-FXD .1UF +80-20% 50VDC CER | 04222 | SA105E104ZAA |
| A83C3 | 0160-4571 | 8 | | CAPACITOR-FXD .1UF +80-20% 50VDC CER | 04222 | SA105E104ZAA |
| A83C101 | 0160-3334 | 9 | 38 | CAPACITOR-FXD .01UF +-10% 50VDC CER | 04222 | SA105C103KAA |
| A83C102 | 0160-3334 | 9 | | CAPACITOR-FXD .01UF +-10% 50VDC CER | 04222 | SA105C103KAA |
| A83C103 | 0160-3334 | 9 | | CAPACITOR-FXD .01UF +-10% 50VDC CER | 04222 | SA105C103KAA |
| A83C104 | 0160-3334 | 9 | | CAPACITOR-FXD .01UF +-10% 50VDC CER | 04222 | SA105C103KAA |
| A83C105 | 0160-3334 | 9 | | CAPACITOR-FXD .01UF +-10% 50VDC CER | 04222 | SA105C103KAA |
| A83C106 | 0160-3334 | 9 | | CAPACITOR-FXD .01UF +-10% 50VDC CER | 04222 | SA105C103KAA |
| A83C107 | 0160-3334 | 9 | | CAPACITOR-FXD .01UF +-10% 50VDC CER | 04222 | SA105C103KAA |
| A83C108 | 0160-3334 | 9 | | CAPACITOR-FXD .01UF +-10% 50VDC CER | 04222 | SA105C103KAA |
| A83C109 | 0160-3334 | 9 | | CAPACITOR-FXD .01UF +-10% 50VDC CER | 04222 | SA105C103KAA |
| A83C110 | 0160-3334 | 9 | | CAPACITOR-FXD .01UF +-10% 50VDC CER | 04222 | SA105C103KAA |
| A83C111 | 0160-3334 | 9 | | CAPACITOR-FXD .01UF +-10% 50VDC CER | 04222 | SA105C103KAA |
| A83C112 | 0160-3334 | 9 | | CAPACITOR-FXD .01UF +-10% 50VDC CER | 04222 | SA105C103KAA |
| A83C113 | 0160-3334 | 9 | | CAPACITOR-FXD .01UF +-10% 50VDC CER | 04222 | SA105C103KAA |
| A83C114 | 0160-3334 | 9 | | CAPACITOR-FXD .01UF +-10% 50VDC CER | 04222 | SA105C103KAA |
| A83C115 | 0160-3334 | 9 | | CAPACITOR-FXD .01UF +-10% 50VDC CER | 04222 | SA105C103KAA |
| A83C116 | 0160-3334 | 9 | | CAPACITOR-FXD .01UF +-10% 50VDC CER | 04222 | SA105C103KAA |
| A83C117 | 0160-3334 | 9 | | CAPACITOR-FXD .01UF +-10% 50VDC CER | 04222 | SA105C103KAA |
| A83C118 | 0160-3334 | 9 | | CAPACITOR-FXD .01UF +-10% 50VDC CER | 04222 | SA105C103KAA |
| A83C119 | 0160-3334 | 9 | | CAPACITOR-FXD .01UF +-10% 50VDC CER | 04222 | SA105C103KAA |
| A83C120 | 0160-3334 | 9 | | CAPACITOR-FXD .01UF +-10% 50VDC CER | 04222 | SA105C103KAA |
| A83C121 | 0160-3334 | 9 | | CAPACITOR-FXD .01UF +-10% 50VDC CER | 04222 | SA105C103KAA |
| A83C122 | 0160-3334 | 9 | | CAPACITOR-FXD .01UF +-10% 50VDC CER | 04222 | SA105C103KAA |
| A83C123 | 0160-3334 | 9 | | CAPACITOR-FXD .01UF +-10% 50VDC CER | 04222 | SA105C103KAA |
| A83C124 | 0160-3334 | 9 | | CAPACITOR-FXD .01UF +-10% 50VDC CER | 04222 | SA105C103KAA |
| A83C125 | 0160-3334 | 9 | | CAPACITOR-FXD .01UF +-10% 50VDC CER | 04222 | SA105C103KAA |
| A83C126 | 0160-3334 | 9 | | CAPACITOR-FXD .01UF +-10% 50VDC CER | 04222 | SA105C103KAA |
| A83C127 | 0160-3334 | 9 | | CAPACITOR-FXD .01UF +-10% 50VDC CER | 04222 | SA105C103KAA |
| A83C128 | 0160-3334 | 9 | | CAPACITOR-FXD .01UF +-10% 50VDC CER | 04222 | SA105C103KAA |
| A83C129 | 0160-3334 | 9 | | CAPACITOR-FXD .01UF +-10% 50VDC CER | 04222 | SA105C103KAA |
| A83C130 | 0160-3334 | 9 | | CAPACITOR-FXD .01UF +-10% 50VDC CER | 04222 | SA105C103KAA |
| A83C131 | 0160-4571 | 8 | | CAPACITOR-FXD .1UF +80-20% 50VDC CER | 04222 | SA105E104ZAA |
| A83C132 | 0160-4571 | 8 | | CAPACITOR-FXD .1UF +80-20% 50VDC CER | 04222 | SA105E104ZAA |
| A83C133 | 0160-4571 | 8 | | CAPACITOR-FXD .1UF +80-20% 50VDC CER | 04222 | SA105E104ZAA |
| A83C134 | 0160-3334 | 9 | | CAPACITOR-FXD .01UF +-10% 50VDC CER | 04222 | SA105C103KAA |
| A83C135 | 0160-3334 | 9 | | CAPACITOR-FXD .01UF +-10% 50VDC CER | 04222 | SA105C103KAA |
| A83C136 | 0160-3334 | 9 | | CAPACITOR-FXD .01UF +-10% 50VDC CER | 04222 | SA105C103KAA |
| A83C137 | 0160-3334 | 9 | | CAPACITOR-FXD .01UF +-10% 50VDC CER | 04222 | SA105C103KAA |

See introduction to this section for ordering information
* Indicates one of several possible values installed

# Table 9-3. Replaceable Parts

| Reference Designation | HP Part Number | C D | Qty. | Description | Mfr. Code | Mfr. Part Number |
|---|---|---|---|---|---|---|
| A83C138 | 0160-3334 | 9 | | CAPACITOR-FXD .01UF +-10% 50VDC CER | 04222 | SA105C103KAA |
| A83C139 | 0160-3334 | 9 | | CAPACITOR-FXD .01UF +-10% 50VDC CER | 04222 | SA105C103KAA |
| A83C140 | 0160-3334 | 9 | | CAPACITOR-FXD .01UF +-10% 50VDC CER | 04222 | SA105C103KAA |
| A83C141 | 0160-3334 | 9 | | CAPACITOR-FXD .01UF +-10% 50VDC CER | 04222 | SA105C103KAA |
| A83C142 | 0180-0228 | 6 | | CAPACITOR-FXD 22UF+-10% 15VDC TA | 13606 | 150D226X9015B2-DYS |
| A83CR101 | 1990-1123 | 0 | 2 | OPT LED LMP R AP LMP1301 TT1H | 28480 | 1990-1123 |
| A83CR102 | 1990-1123 | 0 | | OPT LED LMP R AP LMP1301 TT1H | 28480 | 1990-1123 |
| A83CR103 | 1990-1124 | 1 | 1 | OPT LED LMP Y AP LMP1401 TT1H | 28480 | 1990-1124 |
| A83CR104 | 1990-1122 | 9 | 1 | OPT LED LMP G GP LMP1503 TT1H | 28480 | 1990-1122 |
| A83J3 | 1250-1810 | 4 | 1 | CONNECTOR-RF SMB M PC 50-OHM | 98291 | 51-353-0049 |
| A83L1 | 9100-3334 | 2 | 1 | INDUCTOR 25UH 10% .3D | 99484 | ES-2638 |
| A83MP1 | 4040-0751 | 8 | 1 | EXTR-PC BD ORN POLYC .062-IN-BD-THKNS | 28480 | |
| A83MP2 | 4040-0747 | 2 | 1 | EXTR-PC BD GRA POLYC .062-IN-BD-THKNS | 28480 | |
| A83Q1 | 1854-0215 | 1 | 1 | TRANSISTOR NPN SI PD=350MW FT=300MHZ | 04713 | |
| A83R1 | 0683-1035 | 1 | 3 | RESISTOR 10K 5% .25W CF TC=0-400 | 77902 | R-25J |
| A83R2 | 0683-1035 | 1 | | RESISTOR 10K 5% .25W CF TC=0-400 | 77902 | R-25J |
| A83R3 | 0683-1025 | 9 | 2 | RESISTOR 1K 5% .25W CF TC=0-400 | 77902 | R-25J |
| A83R4 | 0683-4735 | 4 | 1 | RESISTOR 47K 5% .25W CF TC=0-400 | 77902 | R-25J |
| A83R5 | 0683-1025 | 9 | | RESISTOR 1K 5% .25W CF TC=0-400 | 77902 | R-25J |
| A83R6 | 0683-1035 | 1 | | RESISTOR 10K 5% .25W CF TC=0-400 | 77902 | R-25J |
| A83R101 | 0683-4315 | 6 | 11 | RESISTOR 430 5% .25W CF TC=0-400 | 77902 | R-25J |
| A83R102 | 0683-4315 | 6 | | RESISTOR 430 5% .25W CF TC=0-400 | 77902 | R-25J |
| A83R103 | 0683-4315 | 6 | | RESISTOR 430 5% .25W CF TC=0-400 | 77902 | R-25J |
| A83R104 | 0683-4315 | 6 | | RESISTOR 430 5% .25W CF TC=0-400 | 77902 | R-25J |
| A83R106 | 0683-1825 | 7 | 11 | RESISTOR 1.8K 5% .25W CF TC=0-400 | 77902 | R-25J |
| A83R107 | 0683-4315 | 6 | | RESISTOR 430 5% .25W CF TC=0-400 | 77902 | R-25J |
| A83R108 | 0683-4315 | 6 | | RESISTOR 430 5% .25W CF TC=0-400 | 77902 | R-25J |
| A83R109 | 0683-4315 | 6 | | RESISTOR 430 5% .25W CF TC=0-400 | 77902 | R-25J |
| A83R110 | 0683-4315 | 6 | | RESISTOR 430 5% .25W CF TC=0-400 | 77902 | R-25J |
| A83R111 | 0683-4315 | 6 | | RESISTOR 430 5% .25W CF TC=0-400 | 77902 | R-25J |
| A83R112 | 0683-1825 | 7 | | RESISTOR 1.8K 5% .25W CF TC=0-400 | 77902 | R-25J |
| A83R113 | 0683-1825 | 7 | | RESISTOR 1.8K 5% .25W CF TC=0-400 | 77902 | R-25J |
| A83R114 | 0683-1825 | 7 | | RESISTOR 1.8K 5% .25W CF TC=0-400 | 77902 | R-25J |
| A83R115 | 0683-1825 | 7 | | RESISTOR 1.8K 5% .25W CF TC=0-400 | 77902 | R-25J |
| A83R116 | 0683-1825 | 7 | | RESISTOR 1.8K 5% .25W CF TC=0-400 | 77902 | R-25J |
| A83R117 | 0683-1825 | 7 | | RESISTOR 1.8K 5% .25W CF TC=0-400 | 77902 | R-25J |
| A83R118 | 0683-1825 | 7 | | RESISTOR 1.8K 5% .25W CF TC=0-400 | 77902 | R-25J |
| A83R119 | 0683-4315 | 6 | | RESISTOR 430 5% .25W CF TC=0-400 | 77902 | R-25J |
| A83R120 | 0683-4315 | 6 | | RESISTOR 430 5% .25W CF TC=0-400 | 77902 | R-25J |
| A83R121 | 0683-1825 | 7 | | RESISTOR 1.8K 5% .25W CF TC=0-400 | 77902 | R-25J |
| A83R122 | 0683-1825 | 7 | | RESISTOR 1.8K 5% .25W CF TC=0-400 | 77902 | R-25J |
| A83R123 | 0683-1015 | 7 | 1 | RESISTOR 100 5% .25W CF TC=0-400 | 77902 | R-25J |
| A83R124 | 0683-1825 | 7 | | RESISTOR 1.8K 5% .25W CF TC=0-400 | 77902 | R-25J |
| A83RN1 | 1810-0162 | 5 | 2 | NETWORK-RES 14-DIP 4.7K OHM X 13 | 11236 | 760-1-R4.7K |
| A83RN101 | 1810-0162 | 5 | | NETWORK-RES 14-DIP 4.7K OHM X 13 | 11236 | 760-1-R4.7K |
| A83SW101 | 3101-2215 | 2 | 1 | SWITCH-RKR DIP-RKR-ASSY 7-1A .05A 30VDC | 81073 | 76PSB07S |
| A83T1 | 9100-3287 | 4 | 1 | TRANSFORMER-ISOLATION 1:1 TURN RATIO | 91637 | ITU-1229-2 |
| A83TP101 | 1460-2201 | 4 | 1 | WFRM ROLLED TEST POINT | L0121P01 | 1460-2201 |
| A83U1 | 1820-3100 | 8 | 4 | IC DCDR TTL ALS BIN 3-TO-8-LINE 3-INP | 01295 | |
| A83U2 | 1820-3100 | 8 | | IC DCDR TTL ALS BIN 3-TO-8-LINE 3-INP | 01295 | |
| A83U3 | 1820-3100 | 8 | | IC DCDR TTL ALS BIN 3-TO-8-LINE 3-INP | 01295 | |
| A83U4 | 1820-3100 | 8 | | IC DCDR TTL ALS BIN 3-TO-8-LINE 3-INP | 01295 | |
| A83U5 | 1820-2656 | 7 | 2 | IC GATE TTL ALS NAND QUAD 2-INP | 01295 | |
| A83U6 | 1820-3707 | 1 | 6 | ICD ALS 74ALS541 OC BUF P20 | 01295 | |
| A83U7 | 1820-3465 | 8 | 4 | IC FF TTL ALS D-TYPE POS-EDGE-TRIG COM | 01295 | |
| A83U8 | 1820-3465 | 8 | | IC FF TTL ALS D-TYPE POS-EDGE-TRIG COM | 01295 | |
| A83U9 | 1820-2634 | 1 | 3 | IC INV TTL ALS HEX | 01295 | |
| A83U10 | 1820-3707 | 1 | | ICD ALS 74ALS541 OC BUF P20 | 01295 | |
| A83U11 | 1820-2757 | 9 | 2 | IC FF TTL ALS D-TYPE POS-EDGE-TRIG OCTL | 01295 | |
| A83U12 | 1820-3707 | 1 | | ICD ALS 74ALS541 OC BUF P20 | 01295 | |
| A83U13 | 1820-3707 | 1 | | ICD ALS 74ALS541 OC BUF P20 | 01295 | |
| A83U14 | 1820-2757 | 9 | | IC FF TTL ALS D-TYPE POS-EDGE-TRIG OCTL | 01295 | |
| A83U15 | 1820-3707 | 1 | | ICD ALS 74ALS541 OC BUF P20 | 01295 | |
| A83U16 | 1820-3465 | 8 | | IC FF TTL ALS D-TYPE POS-EDGE-TRIG COM | 01295 | |
| A83U17 | 03585-60333 | 6 | 1 | COUNTER CTL. PAL | 28480 | 03585-60333 |

See introduction to this section for ordering information
* Indicates one of several possible values installed

# Table 9-3. Replaceable Parts

| Reference Designation | HP Part Number | C D | Qty. | Description | Mfr. Code | Mfr. Part Number |
|---|---|---|---|---|---|---|
| A83U18 | 1820-3167 | 7 | 2 | IC CNTR TTL LS BIN SYNCHRO POS-EDGE-TRIG01295 | 01295 | |
| A83U19 | 1820-3167 | 7 | | IC CNTR TTL LS BIN SYNCHRO POS-EDGE-TRIG01295 | 01295 | |
| A83U20 | 1820-3144 | 0 | 3 | IC CNTR TTL LS BIN SYNCHRO POS-EDGE-TRIG01295 | 01295 | |
| A83U21 | 1820-3144 | 0 | | IC CNTR TTL LS BIN SYNCHRO POS-EDGE-TRIG01295 | 01295 | |
| A83U22 | 1820-3144 | 0 | | IC CNTR TTL LS BIN SYNCHRO POS-EDGE-TRIG01295 | 01295 | |
| A83U23 | 1820-2634 | 1 | | IC INV TTL ALS HEX | 01295 | |
| A83U101 | 1820-4075 | 8 | 1 | ICD ALS 74ALS259 8B LATCH P16 | 01295 | |
| A83U102 | 1820-3707 | 1 | | ICD ALS 74ALS541 OC BUF P20 | 01295 | |
| A83U104 | 1820-2488 | 3 | 1 | IC FF TTL ALS D-TYPE POS-EDGE-TRIG | 01295 | |
| A83U105 | 1820-3104 | 2 | 2 | IC SHF-RGTR TTL ALS MULTI-MODE | 01295 | |
| A83U106 | 1820-2635 | 2 | 2 | IC GATE TTL ALS AND QUAD 2-INP | 01295 | |
| A83U107 | 1990-0429 | 7 | 1 | OPTO-ISOLATOR LED-IC GATE IF=10MA-MAX | 28480 | 1990-0429 |
| A83U108 | 1990-0461 | 7 | 3 | OPTO-ISOLATOR LED-IC GATE IF=10MA-MAX | 28480 | 1990-0461 |
| A83U109 | 1990-0461 | 7 | | OPTO-ISOLATOR LED-IC GATE IF=10MA-MAX | 28480 | 1990-0461 |
| A83U110 | 1990-0461 | 7 | | OPTO-ISOLATOR LED-IC GATE IF=10MA-MAX | 28480 | 1990-0461 |
| A83U111 | 1820-2634 | 1 | | IC INV TTL ALS HEX | 01295 | |
| A83U112 | 1820-2635 | 2 | | IC GATE TTL ALS AND QUAD 2-INP | 01295 | |
| A83U113 | 1820-2656 | 7 | | IC GATE TTL ALS NAND QUAD 2-INP | 01295 | |
| A83U114 | 1820-3465 | 8 | | IC FF TTL ALS D-TYPE POS-EDGE-TRIG COM | 01295 | |
| A83U115 | 1820-3104 | 2 | | IC SHF-RGTR TTL ALS MULTI-MODE | 01295 | |
| A83U116 | 1820-2548 | 6 | 1 | IC-GENERAL PURPOSE INTERFACE BUS ADAPTER01295 | 01295 | |
| A83U117 | 1820-3513 | 7 | 1 | IC TRANSCEIVER TTL S INSTR-BUS IEEE-488 | 27014 | |
| A83U118 | 1820-3431 | 8 | 1 | IC TRANSCEIVER TTL S INSTR-BUS IEEE-488 | 27014 | |
| | 2190-0363 | 3 | 2 | WASHER-FL NM NO. 2 .09-IN-ID .15-IN-OD | 34114 | 2-1185108 |
| **A85** | **03585-66585** | **2** | **1** | **DISPLAY PC BD ASSEMBLY** | **28480** | **03585-66585** |
| A85C1 | 0160-6658 | 6 | 1 | C-F 20PF 5% 300V MICAs | 57582 | HP15200J3ST |
| A85C2 | 0180-1794 | 3 | 1 | CAPACITOR-FXD 22UF+-10% 35VDC TA | 13606 | 150D226X9035R2-DYS |
| A85C3 | 0160-4571 | 8 | 1 | CAPACITOR-FXD .1UF +80-20% 50VDC CER | 04222 | SA105E104ZAA |
| A85C4 | 0160-3334 | 9 | 22 | CAPACITOR-FXD .01UF +-10% 50VDC CER | 04222 | SA105C103KAA |
| A85C5 | 0160-3334 | 9 | | CAPACITOR-FXD .01UF +-10% 50VDC CER | 04222 | SA105C103KAA |
| A85C6 | 0160-3334 | 9 | | CAPACITOR-FXD .01UF +-10% 50VDC CER | 04222 | SA105C103KAA |
| A85C7 | 0160-3334 | 9 | | CAPACITOR-FXD .01UF +-10% 50VDC CER | 04222 | SA105C103KAA |
| A85C8 | 0160-3334 | 9 | | CAPACITOR-FXD .01UF +-10% 50VDC CER | 04222 | SA105C103KAA |
| A85C9 | 0160-3334 | 9 | | CAPACITOR-FXD .01UF +-10% 50VDC CER | 04222 | SA105C103KAA |
| A85C10 | 0160-3334 | 9 | | CAPACITOR-FXD .01UF +-10% 50VDC CER | 04222 | SA105C103KAA |
| A85C11 | 0160-3334 | 9 | | CAPACITOR-FXD .01UF +-10% 50VDC CER | 04222 | SA105C103KAA |
| A85C12 | 0160-3334 | 9 | | CAPACITOR-FXD .01UF +-10% 50VDC CER | 04222 | SA105C103KAA |
| A85C13 | 0160-3334 | 9 | | CAPACITOR-FXD .01UF +-10% 50VDC CER | 04222 | SA105C103KAA |
| A85C14 | 0160-3334 | 9 | | CAPACITOR-FXD .01UF +-10% 50VDC CER | 04222 | SA105C103KAA |
| A85C15 | 0160-3334 | 9 | | CAPACITOR-FXD .01UF +-10% 50VDC CER | 04222 | SA105C103KAA |
| A85C16 | 0160-3334 | 9 | | CAPACITOR-FXD .01UF +-10% 50VDC CER | 04222 | SA105C103KAA |
| A85C17 | 0160-3334 | 9 | | CAPACITOR-FXD .01UF +-10% 50VDC CER | 04222 | SA105C103KAA |
| A85C18 | 0160-3334 | 9 | | CAPACITOR-FXD .01UF +-10% 50VDC CER | 04222 | SA105C103KAA |
| A85C19 | 0160-3334 | 9 | | CAPACITOR-FXD .01UF +-10% 50VDC CER | 04222 | SA105C103KAA |
| A85C20 | 0160-3334 | 9 | | CAPACITOR-FXD .01UF +-10% 50VDC CER | 04222 | SA105C103KAA |
| A85C21 | 0160-3334 | 9 | | CAPACITOR-FXD .01UF +-10% 50VDC CER | 04222 | SA105C103KAA |
| A85C22 | 0160-3334 | 9 | | CAPACITOR-FXD .01UF +-10% 50VDC CER | 04222 | SA105C103KAA |
| A85C23 | 0160-3334 | 9 | | CAPACITOR-FXD .01UF +-10% 50VDC CER | 04222 | SA105C103KAA |
| A85C24 | 0180-0291 | 3 | 1 | CAPACITOR-FXD 1UF+-10% 35VDC TA | 13606 | 150D105X9035A2-DYS |
| A85C25 | 0160-3334 | 9 | | CAPACITOR-FXD .01UF +-10% 50VDC CER | 04222 | SA105C103KAA |
| A85C26 | 0160-3334 | 9 | | CAPACITOR-FXD .01UF +-10% 50VDC CER | 04222 | SA105C103KAA |
| A85CR1 | 1901-0050 | 3 | 2 | DIODE-SWITCHING 80V 200MA 2NS DO-35 | 9N171 | |
| A85CR2 | 1901-0050 | 3 | | DIODE-SWITCHING 80V 200MA 2NS DO-35 | 9N171 | |
| A85F1 | 2110-0384 | 0 | 1 | FUSE .062A 125V .281X.093 | 75915 | 275.062 |
| A85J1 | 1251-4795 | 2 | 2 | CONN-POST TYPE .156-PIN-SPCG 2-CONT | 27264 | 26-48-1024 |
| A85J2 | 1251-4795 | 2 | | CONN-POST TYPE .156-PIN-SPCG 2-CONT | 27264 | 26-48-1024 |
| A85J3 | 1251-4047 | 7 | 1 | CONN-POST TYPE .100-PIN-SPCG 3-CONT | 27264 | 22-05-2031 |
| A85L1 | 9140-0748 | 0 | 2 | INDUCTOR 250UH 25% .25DX.5LG Q=3 | 24226 | CA-253-5 |
| A85L2 | 9140-0748 | 0 | | INDUCTOR 250UH 25% .25DX.5LG Q=3 | 24226 | CA-253-5 |
| A85MP1 | 4040-0747 | 2 | 1 | EXTR-PC BD GRA POLYC .062-IN-BD-THKNS | 28480 | |
| A85MP2 | 4040-0753 | 0 | 1 | EXTR-PC BD GRN POLYC .062-IN-BD-THKNS | 28480 | |
| A85MP3 | 6960-0080 | 8 | 1 | PLUG-HOLE FL-HD FOR .185-D-HOLE TFE | 98291 | 119-0052-00-0-009 |
| A85Q3 | 1854-1028 | 6 | 1 | TRANSISTOR NPN SI PD=350MW FT=300MHZ | 04713 | |
| A85R1 | 0683-4725 | 2 | 2 | RESISTOR 4.7K 5% .25W CF TC=0-400 | 77902 | R-25J |
| A85R2 | 2100-3353 | 8 | 1 | RESISTOR-TRMR 20K 10% C SIDE-ADJ 1-TRN | 32997 | 3386X-Y46-203 |

See introduction to this section for ordering information
* Indicates one of several possible values installed

# Table 9-3. Replaceable Parts

| Reference Designation | HP Part Number | C D | Qty. | Description | Mfr. Code | Mfr. Part Number |
|---|---|---|---|---|---|---|
| A85R3 | 0683-2025 | 1 | 1 | RESISTOR 2K 5% .25W CF TC=0-400 | 77902 | R-25J |
| A85R4 | 0683-5125 | 8 | 1 | RESISTOR 5.1K 5% .25W CF TC=0-400 | 77902 | R-25J |
| A85R5 | 0683-1025 | 9 | 2 | RESISTOR 1K 5% .25W CF TC=0-400 | 77902 | R-25J |
| A85R6 | 0683-1025 | 9 | | RESISTOR 1K 5% .25W CF TC=0-400 | 77902 | R-25J |
| A85R7 | 0683-4725 | 2 | | RESISTOR 4.7K 5% .25W CF TC=0-400 | 77902 | R-25J |
| A85R8 | 0683-4705 | 8 | 1 | RESISTOR 47 5% .25W CF TC=0-400 | 77902 | R-25J |
| A85R9 | 0683-4715 | 0 | 1 | RESISTOR 470 5% .25W CF TC=0-400 | 77902 | R-25J |
| A85R10 | 0683-6225 | 1 | 1 | RESISTOR 6.2K 5% .25W CF TC=0-400 | 77902 | R-25J |
| A85TP1 | 1251-0600 | 0 | 4 | CONNECTOR-SGL CONT PIN 1.14-MM-BSC-SZ SQ27264 | 27264 | 16-06-0034 |
| A85TP2 | 1251-0600 | 0 | | CONNECTOR-SGL CONT PIN 1.14-MM-BSC-SZ SQ27264 | 27264 | 16-06-0034 |
| A85TP3 | 1251-0600 | 0 | | CONNECTOR-SGL CONT PIN 1.14-MM-BSC-SZ SQ27264 | 27264 | 16-06-0034 |
| A85TP4 | 1251-0600 | 0 | | CONNECTOR-SGL CONT PIN 1.14-MM-BSC-SZ SQ27264 | 27264 | 16-06-0034 |
| A85U1 | 1820-1730 | 6 | 2 | IC FF TTL LS D-TYPE POS-EDGE-TRIG COM | 01295 | |
| A85U2 | 1820-1730 | 6 | | IC FF TTL LS D-TYPE POS-EDGE-TRIG COM | 01295 | |
| A85U3 | 03585-60334 | 7 | 1 | PGM FPC 1826-1885 DSPL CTLR | 28480 | 03585-60334 |
| A85U4 | 1820-1144 | 6 | 1 | IC GATE TTL LS NOR QUAD 2-INP | 01295 | |
| A85U5 | 1820-1470 | 1 | 1 | IC MUXR/DATA-SEL TTL LS 2-TO-1-LINE QUAD01295 | 01295 | |
| A85U6 | 1820-1112 | 8 | 3 | IC FF TTL LS D-TYPE POS-EDGE-TRIG | 01295 | |
| A85U7 | 1820-1112 | 8 | | IC FF TTL LS D-TYPE POS-EDGE-TRIG | 01295 | |
| A85U8 | 1820-1112 | 8 | | IC FF TTL LS D-TYPE POS-EDGE-TRIG | 01295 | |
| A85U9 | 1820-1423 | 4 | 1 | IC MV TTL LS MONOSTBL RETRIG DUAL | 01295 | |
| A85U10 | 1820-1197 | 9 | 1 | IC GATE TTL LS NAND QUAD 2-INP | 01295 | |
| A85U11 | 1820-1194 | 6 | 5 | IC CNTR TTL LS BIN UP/DOWN SYNCHRO | 01295 | |
| A85U12 | 1820-1194 | 6 | | IC CNTR TTL LS BIN UP/DOWN SYNCHRO | 01295 | |
| A85U13 | 1820-1194 | 6 | | IC CNTR TTL LS BIN UP/DOWN SYNCHRO | 01295 | |
| A85U14 | 03585-60335 | 8 | 1 | PGM PROM 1816-1160 CHAR GEN | 28480 | 03585-60335 |
| A85U15 | 1820-1195 | 7 | 3 | IC FF TTL LS D-TYPE POS-EDGE-TRIG COM | 01295 | |
| A85U16 | 1820-1195 | 7 | | IC FF TTL LS D-TYPE POS-EDGE-TRIG COM | 01295 | |
| A85U17 | 1820-1195 | 7 | | IC FF TTL LS D-TYPE POS-EDGE-TRIG COM | 01295 | |
| A85U18 | 03585-60306 | 3 | 1 | LINE LENGTH ROM | 28480 | 03585-60306 |
| A85U19 | 1820-1194 | 6 | | IC CNTR TTL LS BIN UP/DOWN SYNCHRO | 01295 | |
| A85U20 | 1820-1194 | 6 | | IC CNTR TTL LS BIN UP/DOWN SYNCHRO | 01295 | |
| A85U20 | 5040-8406 | 7 | | POLYC GRN BLEND | 28480 | 5040-8406 |
| A85U22 | 1820-1201 | 6 | 1 | IC GATE TTL LS AND QUAD 2-INP | 01295 | |
| **A86** | **03585-66586** | **3** | **1** | **ANALOG DISPLAY PC BD ASSEMBLY** | **28480** | **03585-66586** |
| A86C1 | 0160-2257 | 3 | 1 | CAPACITOR-FXD 10PF +-5% 500VDC CER 0+-6052763 | 52763 | |
| A86C2 | 0160-3334 | 9 | 37 | CAPACITOR-FXD .01UF +-10% 50VDC CER | 04222 | SA105C103KAA |
| A86C3 | 0160-3334 | 9 | | CAPACITOR-FXD .01UF +-10% 50VDC CER | 04222 | SA105C103KAA |
| A86C4 | 0160-3334 | 9 | | CAPACITOR-FXD .01UF +-10% 50VDC CER | 04222 | SA105C103KAA |
| A86C5 | 0160-3334 | 9 | | CAPACITOR-FXD .01UF +-10% 50VDC CER | 04222 | SA105C103KAA |
| A86C6 | 0160-4439 | 6 | 1 | CAPACITOR-FXD 470PF +-2.5% 630VDC POLYP | 25088 | |
| A86C7 | 0121-0493 | 3 | 1 | CAPACITOR-V TRMR-AIR 1.7-11PF 175V | 74970 | 187-0306-125 |
| A86C8 | 0160-6864 | 6 | 1 | C-F 4.7PF 5% 500V CERTBr | 59660 | 301 089 COH0 479C |
| A86C9 | 0160-3334 | 9 | | CAPACITOR-FXD .01UF +-10% 50VDC CER | 04222 | SA105C103KAA |
| A86C10 | 0160-4682 | 2 | 1 | CAPACITOR-FXD 1000PF +-2.5% 160VDC POLYP25088 | 25088 | |
| A86C11 | 0160-3334 | 9 | | CAPACITOR-FXD .01UF +-10% 50VDC CER | 04222 | SA105C103KAA |
| A86C12 | 0160-4806 | 2 | 3 | CAPACITOR-FXD 39PF +-5% 100VDC CER 0+-3004222 | 04222 | SA102A390JAA |
| A86C13 | 0160-4806 | 2 | | CAPACITOR-FXD 39PF +-5% 100VDC CER 0+-3004222 | 04222 | SA102A390JAA |
| A86C14 | 0160-4806 | 2 | | CAPACITOR-FXD 39PF +-5% 100VDC CER 0+-3004222 | 04222 | SA102A390JAA |
| A86C15 | 0160-3334 | 9 | | CAPACITOR-FXD .01UF +-10% 50VDC CER | 04222 | SA105C103KAA |
| A86C16 | 0160-4265 | 7 | 1 | CAPACITOR-FXD .47UF +-20% 50VDC | 15766 | HEW-386 |
| A86C17 | 0160-3334 | 9 | | CAPACITOR-FXD .01UF +-10% 50VDC CER | 04222 | SA105C103KAA |
| A86C18 | 0160-3334 | 9 | | CAPACITOR-FXD .01UF +-10% 50VDC CER | 04222 | SA105C103KAA |
| A86C20 | 0180-0197 | 8 | 3 | CAPACITOR-FXD 2.2UF+-10% 20VDC TA | 13606 | 150D225X9020A2-DYS |
| A86C21 | 0180-0229 | 7 | 1 | CAPACITOR-FXD 33UF+-10% 10VDC TA | 13606 | 150D336X9010B2-DYS |
| A86C22 | 0160-3334 | 9 | | CAPACITOR-FXD .01UF +-10% 50VDC CER | 04222 | SA105C103KAA |
| A86C23 | 0160-3334 | 9 | | CAPACITOR-FXD .01UF +-10% 50VDC CER | 04222 | SA105C103KAA |
| A86C24 | 0160-3334 | 9 | | CAPACITOR-FXD .01UF +-10% 50VDC CER | 04222 | SA105C103KAA |
| A86C25 | 0160-3334 | 9 | | CAPACITOR-FXD .01UF +-10% 50VDC CER | 04222 | SA105C103KAA |
| A86C26 | 0180-2205 | 3 | 2 | CAPACITOR-FXD .33UF+-10% 35VDC TA | 13606 | 150D334X9035A2-DYS |
| A86C27 | 0180-0291 | 3 | 4 | CAPACITOR-FXD 1UF+-10% 35VDC TA | 13606 | 150D105X9035A2-DYS |
| A86C28 | 0180-1746 | 5 | 4 | CAPACITOR-FXD 15UF+-10% 20VDC TA | 13606 | 150D156X9020B2-DYS |
| A86C29 | 0180-0197 | 8 | | CAPACITOR-FXD 2.2UF+-10% 20VDC TA | 13606 | 150D225X9020A2-DYS |
| A86C30 | 0180-0291 | 3 | | CAPACITOR-FXD 1UF+-10% 35VDC TA | 13606 | 150D105X9035A2-DYS |
| A86C31 | 0160-3334 | 9 | | CAPACITOR-FXD .01UF +-10% 50VDC CER | 04222 | SA105C103KAA |

See introduction to this section for ordering information
* Indicates one of several possible values installed

## Table 9-3. Replaceable Parts

| Reference Designation | HP Part Number | C D | Qty. | Description | Mfr. Code | Mfr. Part Number |
|---|---|---|---|---|---|---|
| A86C32 | 0160-3334 | 9 | | CAPACITOR-FXD .01UF +-10% 50VDC CER | 04222 | SA105C103KAA |
| A86C33 | 0160-3334 | 9 | | CAPACITOR-FXD .01UF +-10% 50VDC CER | 04222 | SA105C103KAA |
| A86C34 | 0160-3334 | 9 | | CAPACITOR-FXD .01UF +-10% 50VDC CER | 04222 | SA105C103KAA |
| A86C35 | 0160-3334 | 9 | | CAPACITOR-FXD .01UF +-10% 50VDC CER | 04222 | SA105C103KAA |
| A86C36 | 0160-3334 | 9 | | CAPACITOR-FXD .01UF +-10% 50VDC CER | 04222 | SA105C103KAA |
| A86C37 | 0160-3334 | 9 | | CAPACITOR-FXD .01UF +-10% 50VDC CER | 04222 | SA105C103KAA |
| A86C38 | 0160-3334 | 9 | | CAPACITOR-FXD .01UF +-10% 50VDC CER | 04222 | SA105C103KAA |
| A86C39 | 0160-3334 | 9 | | CAPACITOR-FXD .01UF +-10% 50VDC CER | 04222 | SA105C103KAA |
| A86C40 | 0160-3334 | 9 | | CAPACITOR-FXD .01UF +-10% 50VDC CER | 04222 | SA105C103KAA |
| A86C41 | 0160-3334 | 9 | | CAPACITOR-FXD .01UF +-10% 50VDC CER | 04222 | SA105C103KAA |
| A86C42 | 0160-3334 | 9 | | CAPACITOR-FXD .01UF +-10% 50VDC CER | 04222 | SA105C103KAA |
| A86C43 | 0160-3334 | 9 | | CAPACITOR-FXD .01UF +-10% 50VDC CER | 04222 | SA105C103KAA |
| A86C44 | 0160-3334 | 9 | | CAPACITOR-FXD .01UF +-10% 50VDC CER | 04222 | SA105C103KAA |
| A86C45 | 0160-3334 | 9 | | CAPACITOR-FXD .01UF +-10% 50VDC CER | 04222 | SA105C103KAA |
| A86C46 | 0160-3334 | 9 | | CAPACITOR-FXD .01UF +-10% 50VDC CER | 04222 | SA105C103KAA |
| A86C47 | 0160-3334 | 9 | | CAPACITOR-FXD .01UF +-10% 50VDC CER | 04222 | SA105C103KAA |
| A86C48 | 0160-3334 | 9 | | CAPACITOR-FXD .01UF +-10% 50VDC CER | 04222 | SA105C103KAA |
| A86C49 | 0160-3334 | 9 | | CAPACITOR-FXD .01UF +-10% 50VDC CER | 04222 | SA105C103KAA |
| A86C50 | 0160-3334 | 9 | | CAPACITOR-FXD .01UF +-10% 50VDC CER | 04222 | SA105C103KAA |
| A86C51 | 0180-2205 | 3 | | CAPACITOR-FXD .33UF+-10% 35VDC TA | 13606 | 150D334X9035A2-DYS |
| A86C52 | 0180-0291 | 3 | | CAPACITOR-FXD 1UF+-10% 35VDC TA | 13606 | 150D105X9035A2-DYS |
| A86C53 | 0180-1746 | 5 | | CAPACITOR-FXD 15UF+-10% 20VDC TA | 13606 | 150D156X9020B2-DYS |
| A86C54 | 0180-0197 | 8 | | CAPACITOR-FXD 2.2UF+-10% 20VDC TA | 13606 | 150D225X9020A2-DYS |
| A86C55 | 0180-0291 | 3 | | CAPACITOR-FXD 1UF+-10% 35VDC TA | 13606 | 150D105X9035A2-DYS |
| A86C56 | 0180-1746 | 5 | | CAPACITOR-FXD 15UF+-10% 20VDC TA | 13606 | 150D156X9020B2-DYS |
| A86C57 | 0180-1746 | 5 | | CAPACITOR-FXD 15UF+-10% 20VDC TA | 13606 | 150D156X9020B2-DYS |
| A86C58 | 0160-3334 | 9 | | CAPACITOR-FXD .01UF +-10% 50VDC CER | 04222 | SA105C103KAA |
| A86C59 | 0160-3334 | 9 | | CAPACITOR-FXD .01UF +-10% 50VDC CER | 04222 | SA105C103KAA |
| A86C60 | 0160-3334 | 9 | | CAPACITOR-FXD .01UF +-10% 50VDC CER | 04222 | SA105C103KAA |
| A86C78 | 0160-3334 | 9 | | CAPACITOR-FXD .01UF +-10% 50VDC CER | 04222 | SA105C103KAA |
| A86CR1 | 1901-0050 | 3 | 2 | DIODE-SWITCHING 80V 200MA 2NS DO-35 | 9N171 | |
| A86CR2 | 1901-0050 | 3 | | DIODE-SWITCHING 80V 200MA 2NS DO-35 | 9N171 | |
| A86CR3 | 1902-3002 | 3 | 4 | DIODE-ZNR 2.37V 5% DO-7 PD=.4W TC=-.074%04713 | 04713 | |
| A86CR4 | 1902-3002 | 3 | | DIODE-ZNR 2.37V 5% DO-7 PD=.4W TC=-.074%04713 | 04713 | |
| A86CR5 | 1902-3002 | 3 | | DIODE-ZNR 2.37V 5% DO-7 PD=.4W TC=-.074%04713 | 04713 | |
| A86CR6 | 1902-3002 | 3 | | DIODE-ZNR 2.37V 5% DO-7 PD=.4W TC=-.074%04713 | 04713 | |
| A86CR11 | 1902-1329 | 3 | 2 | IC V RGLTR-V-REF-FXD 6.6/7.2V TO-46 PKG | 27014 | LM329CH |
| A86CR12 | 1902-0041 | 4 | 1 | DIODE-ZNR 5.11V 5% DO-35 PD=.4W | 04713 | |
| A86F1 | 2110-0384 | 0 | 2 | FUSE .062A 125V .281X.093 | 75915 | 275.062 |
| A86F2 | 2110-0384 | 0 | | FUSE .062A 125V .281X.093 | 75915 | 275.062 |
| A86J1 | 1251-4047 | 7 | 3 | CONN-POST TYPE .100-PIN-SPCG 3-CONT | 27264 | 22-05-2031 |
| A86J2 | 1251-4047 | 7 | | CONN-POST TYPE .100-PIN-SPCG 3-CONT | 27264 | 22-05-2031 |
| A86J3 | 1251-4047 | 7 | | CONN-POST TYPE .100-PIN-SPCG 3-CONT | 27264 | 22-05-2031 |
| A86J4 | 1251-4795 | 2 | 4 | CONN-POST TYPE .156-PIN-SPCG 2-CONT | 27264 | 26-48-1024 |
| A86J5 | 1251-4795 | 2 | | CONN-POST TYPE .156-PIN-SPCG 2-CONT | 27264 | 26-48-1024 |
| A86J6 | 1251-4795 | 2 | | CONN-POST TYPE .156-PIN-SPCG 2-CONT | 27264 | 26-48-1024 |
| A86J7 | 1251-4795 | 2 | | CONN-POST TYPE .156-PIN-SPCG 2-CONT | 27264 | 26-48-1024 |
| A86L1 | 9100-3561 | 7 | 3 | INDUCTOR RF-CH-MLD 6.2UH 5% .166DX.385LG24226 | 24226 | 15M621J |
| A86L2 | 9100-3561 | 7 | | INDUCTOR RF-CH-MLD 6.2UH 5% .166DX.385LG24226 | 24226 | 15M621J |
| A86L3 | 9100-3561 | 7 | | INDUCTOR RF-CH-MLD 6.2UH 5% .166DX.385LG24226 | 24226 | 15M621J |
| A86MP1 | 4040-0747 | 2 | 1 | EXTR-PC BD GRA POLYC .062-IN-BD-THKNS | 28480 | |
| A86MP2 | 4040-0754 | 1 | 1 | EXTR-PC BD BLU POLYC .062-IN-BD-THKNS | 28480 | |
| A86MP3 | 6960-0080 | 8 | 1 | PLUG-HOLE FL-HD FOR .185-D-HOLE TFE | 98291 | 119-0052-00-0-009 |
| A86Q1 | 1853-0083 | 9 | 1 | TRANSISTOR-DUAL PNP PD=600MW | 04713 | |
| A86Q2 | 1854-1030 | 0 | 2 | TRANSISTOR-DUAL NPN TO-78 PD=750MW | 04713 | |
| A86Q5 | 1853-0563 | 0 | 4 | XTR SML1PNP SI 2N3906 TXXXX | 04713 | |
| A86Q6 | 1853-0563 | 0 | | XTR SML1PNP SI 2N3906 TXXXX | 04713 | |
| A86Q7 | 1855-0269 | 7 | 1 | TRANSISTOR MOSFET N-CHAN E-MODE TO-72 SI09283 | 09283 | |
| A86Q8 | 1854-1028 | 6 | 4 | TRANSISTOR NPN SI PD=350MW FT=300MHZ | 04713 | |
| A86Q9 | 1854-1028 | 6 | | TRANSISTOR NPN SI PD=350MW FT=300MHZ | 04713 | |
| A86Q10 | 1854-1028 | 6 | | TRANSISTOR NPN SI PD=350MW FT=300MHZ | 04713 | |
| A86Q11 | 1853-0563 | 0 | | XTR SML1PNP SI 2N3906 TXXXX | 04713 | |
| A86Q12 | 1853-0563 | 0 | | XTR SML1PNP SI 2N3906 TXXXX | 04713 | |
| A86Q12 | 1902-1329 | 3 | | IC V RGLTR-V-REF-FXD 6.6/7.2V TO-46 PKG | 27014 | LM329CH |
| A86Q13 | 1854-0515 | 4 | 2 | TRANSISTOR-DUAL NPN TO-77 PD=600MW | 50721 | |

See introduction to this section for ordering information
* Indicates one of several possible values installed

# Table 9-3. Replaceable Parts

| Reference Designation | HP Part Number | C D | Qty. | Description | Mfr. Code | Mfr. Part Number |
|---|---|---|---|---|---|---|
| A86Q14 | 1854-1028 | 6 | | TRANSISTOR NPN SI PD=350MW FT=300MHZ | 04713 | |
| A86R1 | 0699-0165 | 9 | 1 | RESISTOR 5K 1% .125W F TC=0-50 | 19701 | 5033R |
| A86R2 | 0698-4435 | 2 | 7 | RESISTOR 2.49K 1% .125W F TC=0+-100 | 91637 | CMF-55-1, T-1 |
| A86R3 | 0698-3223 | 4 | 2 | RESISTOR 1.24K 1% .125W F TC=0+-100 | 19701 | SFR25H |
| A86R4 | 0698-4435 | 2 | | RESISTOR 2.49K 1% .125W F TC=0+-100 | 91637 | CMF-55-1, T-1 |
| A86R5 | 0698-4463 | 6 | 1 | RESISTOR 845 1% .125W F TC=0+-100 | 91637 | CMF-55-1, T-1 |
| A86R6 | 0698-6317 | 3 | 4 | RESISTOR 500 .1% .125W F TC=0+-25 | 91637 | CMF-55-1, T-9 |
| A86R7 | 0698-6317 | 3 | | RESISTOR 500 .1% .125W F TC=0+-25 | 91637 | CMF-55-1, T-9 |
| A86R8 | 0698-6317 | 3 | | RESISTOR 500 .1% .125W F TC=0+-25 | 91637 | CMF-55-1, T-9 |
| A86R9 | 0698-6317 | 3 | | RESISTOR 500 .1% .125W F TC=0+-25 | 91637 | CMF-55-1, T-9 |
| A86R10 | 2100-3353 | 8 | 2 | RESISTOR-TRMR 20K 10% C SIDE-ADJ 1-TRN | 32997 | 3386X-Y46-203 |
| A86R11 | 0757-0465 | 6 | 4 | RESISTOR 100K 1% .125W F TC=0+-100 | 19701 | SFR25H |
| A86R12 | 0757-0465 | 6 | | RESISTOR 100K 1% .125W F TC=0+-100 | 19701 | SFR25H |
| A86R13 | 0698-6340 | 2 | 1 | RESISTOR 4K 1% .125W F TC=0+-25 | 19701 | 5033R |
| A86R14 | 0683-1015 | 7 | 1 | RESISTOR 100 5% .25W CF TC=0-400 | 77902 | R-25J |
| A86R15 | 0683-3025 | 3 | 2 | RESISTOR 3K 5% .25W CF TC=0-400 | 77902 | R-25J |
| A86R16 | 0683-3025 | 3 | | RESISTOR 3K 5% .25W CF TC=0-400 | 77902 | R-25J |
| A86R17 | 0683-2025 | 1 | 5 | RESISTOR 2K 5% .25W CF TC=0-400 | 77902 | R-25J |
| A86R18 | 0683-0515 | 0 | 2 | RESISTOR 5.1 5% .25W CF TC=0-400 | 77902 | R-25J |
| A86R19 | 0683-0515 | 0 | | RESISTOR 5.1 5% .25W CF TC=0-400 | 77902 | R-25J |
| A86R20 | 0683-2025 | 1 | | RESISTOR 2K 5% .25W CF TC=0-400 | 77902 | R-25J |
| A86R21 | 0683-1035 | 1 | 3 | RESISTOR 10K 5% .25W CF TC=0-400 | 77902 | R-25J |
| A86R22 | 0683-4725 | 2 | 2 | RESISTOR 4.7K 5% .25W CF TC=0-400 | 77902 | R-25J |
| A86R23 | 0683-6825 | 7 | 1 | RESISTOR 6.8K 5% .25W CF TC=0-400 | 77902 | R-25J |
| A86R24 | 0698-4432 | 9 | 1 | RESISTOR 2.1K 1% .125W F TC=0+-100 | 91637 | CMF-55-1, T-1 |
| A86R25 | 0683-2025 | 1 | | RESISTOR 2K 5% .25W CF TC=0-400 | 77902 | R-25J |
| A86R26 | 0683-2425 | 5 | 1 | RESISTOR 2.4K 5% .25W CF TC=0-400 | 77902 | R-25J |
| A86R27 | 0683-1525 | 4 | 2 | RESISTOR 1.5K 5% .25W CF TC=0-400 | 77902 | R-25J |
| A86R28 | 0698-4479 | 4 | 1 | RESISTOR 14K 1% .125W F TC=0+-100 | 91637 | CMF-55-1, T-1 |
| A86R29 | 0683-1125 | 0 | 1 | RESISTOR 1.1K 5% .25W CF TC=0-400 | 77902 | R-25J |
| A86R30 | 0683-3325 | 6 | 3 | RESISTOR 3.3K 5% .25W CF TC=0-400 | 77902 | R-25J |
| A86R31 | 0683-3325 | 6 | | RESISTOR 3.3K 5% .25W CF TC=0-400 | 77902 | R-25J |
| A86R32 | 0698-3202 | 9 | 1 | RESISTOR 1.74K 1% .125W F TC=0+-100 | 19701 | SFR25H |
| A86R33 | 2100-3351 | 6 | 1 | RESISTOR-TRMR 500 10% C SIDE-ADJ 1-TRN | 32997 | 3386X-Y46-501 |
| A86R34 | 0698-3151 | 7 | 1 | RESISTOR 2.87K 1% .125W F TC=0+-100 | 19701 | SFR25H |
| A86R35 | 0698-3279 | 0 | 2 | RESISTOR 4.99K 1% .125W F TC=0+-100 | 19701 | SFR25H |
| A86R36 | 2100-3352 | 7 | 2 | RESISTOR-TRMR 1K 10% C SIDE-ADJ 1-TRN | 32997 | 3386X-Y46-102 |
| A86R37 | 0698-4367 | 9 | 2 | RESISTOR 20.5 1% .125W F TC=0+-100 | 91637 | CMF-55-1, T-1 |
| A86R38 | 0698-3223 | 4 | | RESISTOR 1.24K 1% .125W F TC=0+-100 | 19701 | SFR25H |
| A86R39 | 0757-0123 | 3 | 1 | RESISTOR 34.8K 1% .125W F TC=0+-100 | 19701 | SFR25H |
| A86R40 | 2100-3353 | 8 | | RESISTOR-TRMR 20K 10% C SIDE-ADJ 1-TRN | 32997 | 3386X-Y46-203 |
| A86R41 | 2100-3352 | 7 | | RESISTOR-TRMR 1K 10% C SIDE-ADJ 1-TRN | 32997 | 3386X-Y46-102 |
| A86R42 | 0698-4435 | 2 | | RESISTOR 2.49K 1% .125W F TC=0+-100 | 91637 | CMF-55-1, T-1 |
| A86R43 | 0757-0280 | 3 | 3 | RESISTOR 1K 1% .125W F TC=0+-100 | 19701 | SFR25H |
| A86R44 | 0698-4439 | 6 | 1 | RESISTOR 3.24K 1% .125W F TC=0+-100 | 91637 | CMF-55-1, T-1 |
| A86R46 | 0757-0280 | 3 | | RESISTOR 1K 1% .125W F TC=0+-100 | 19701 | SFR25H |
| A86R49 | 0698-4435 | 2 | | RESISTOR 2.49K 1% .125W F TC=0+-100 | 91637 | CMF-55-1, T-1 |
| A86R50 | 0698-4435 | 2 | | RESISTOR 2.49K 1% .125W F TC=0+-100 | 91637 | CMF-55-1, T-1 |
| A86R51 | 0698-4367 | 9 | | RESISTOR 20.5 1% .125W F TC=0+-100 | 91637 | CMF-55-1, T-1 |
| A86R52 | 0698-0083 | 8 | 1 | RESISTOR 1.96K 1% .125W F TC=0+-100 | 19701 | SFR25H |
| A86R53 | 0757-0283 | 6 | 5 | RESISTOR 2K 1% .125W F TC=0+-100 | 19701 | SFR25H |
| A86R54 | 0698-3279 | 0 | | RESISTOR 4.99K 1% .125W F TC=0+-100 | 19701 | SFR25H |
| A86R55 | 0757-0280 | 3 | | RESISTOR 1K 1% .125W F TC=0+-100 | 19701 | SFR25H |
| A86R56 | 0757-0442 | 9 | 2 | RESISTOR 10K 1% .125W F TC=0+-100 | 19701 | SFR25H |
| A86R57 | 0757-0442 | 9 | | RESISTOR 10K 1% .125W F TC=0+-100 | 19701 | SFR25H |
| A86R58 | 0698-4434 | 1 | 1 | RESISTOR 2.32K 1% .125W F TC=0+-100 | 91637 | CMF-55-1, T-1 |
| A86R59 | 0698-3258 | 5 | 1 | RESISTOR 5.36K 1% .125W F TC=0+-100 | 19701 | SFR25H |
| A86R60 | 0683-3325 | 6 | | RESISTOR 3.3K 5% .25W CF TC=0-400 | 77902 | R-25J |
| A86R61 | 0683-4715 | 0 | 1 | RESISTOR 470 5% .25W CF TC=0-400 | 77902 | R-25J |
| A86R62 | 0683-1035 | 1 | | RESISTOR 10K 5% .25W CF TC=0-400 | 77902 | R-25J |
| A86R63 | 0683-1035 | 1 | | RESISTOR 10K 5% .25W CF TC=0-400 | 77902 | R-25J |
| A86R64 | 0683-1525 | 4 | | RESISTOR 1.5K 5% .25W CF TC=0-400 | 77902 | R-25J |
| A86R65 | 0698-0063 | 4 | 1 | RESISTOR 5.23K 1% .125W F TC=0+-100 | 19701 | SFR25H |
| A86R66 | 0683-2025 | 1 | | RESISTOR 2K 5% .25W CF TC=0-400 | 77902 | R-25J |
| A86R67 | 0698-4471 | 6 | 1 | RESISTOR 7.15K 1% .125W F TC=0+-100 | 91637 | CMF-55-1, T-1 |

See introduction to this section for ordering information
* Indicates one of several possible values installed

# Table 9-3. Replaceable Parts

| Reference Designation | HP Part Number | C D | Qty. | Description | Mfr. Code | Mfr. Part Number |
|---|---|---|---|---|---|---|
| A86R68 | 0757-0283 | 6 | | RESISTOR 2K 1% .125W F TC=0+-100 | 19701 | SFR25H |
| A86R69 | 0757-0283 | 6 | | RESISTOR 2K 1% .125W F TC=0+-100 | 19701 | SFR25H |
| A86R70 | 0757-0283 | 6 | | RESISTOR 2K 1% .125W F TC=0+-100 | 19701 | SFR25H |
| A86R71 | 0757-0283 | 6 | | RESISTOR 2K 1% .125W F TC=0+-100 | 19701 | SFR25H |
| A86R72 | 2100-3207 | 1 | 2 | RESISTOR-TRMR 5K 10% C SIDE-ADJ 1-TRN | 32997 | 3386X-Y46-502 |
| A86R72 | 1854-1030 | 0 | | TRANSISTOR-DUAL NPN TO-78 PD=750MW | 04713 | |
| A86R73 | 0757-0465 | 6 | | RESISTOR 100K 1% .125W F TC=0+-100 | 19701 | SFR25H |
| A86R74 | 0757-0465 | 6 | | RESISTOR 100K 1% .125W F TC=0+-100 | 19701 | SFR25H |
| A86R107 | 0698-4435 | 2 | | RESISTOR 2.49K 1% .125W F TC=0+-100 | 91637 | CMF-55-1, T-1 |
| A86R108 | 0698-4435 | 2 | | RESISTOR 2.49K 1% .125W F TC=0+-100 | 91637 | CMF-55-1, T-1 |
| A86R116 | 0683-2025 | 1 | | RESISTOR 2K 5% .25W CF TC=0-400 | 77902 | R-25J |
| A86R117 | 0683-4705 | 8 | 2 | RESISTOR 47 5% .25W CF TC=0-400 | 77902 | R-25J |
| A86R118 | 0683-4705 | 8 | | RESISTOR 47 5% .25W CF TC=0-400 | 77902 | R-25J |
| A86R119 | 0698-4473 | 8 | 1 | RESISTOR 8.06K 1% .125W F TC=0+-100 | 91637 | CMF-55-1, T-1 |
| A86R120 | 0683-3015 | 1 | 1 | RESISTOR 300 5% .25W CF TC=0-400 | 77902 | R-25J |
| A86R121 | 0683-4725 | 2 | | RESISTOR 4.7K 5% .25W CF TC=0-400 | 77902 | R-25J |
| A86R122 | 0698-4492 | 1 | 1 | RESISTOR 32.4K 1% .125W F TC=0+-100 | 91637 | CMF-55-1, T-1 |
| A86R123 | 2100-3207 | 1 | | RESISTOR-TRMR 5K 10% C SIDE-ADJ 1-TRN | 32997 | 3386X-Y46-502 |
| A86R124 | 0698-4478 | 3 | 1 | RESISTOR 10.7K 1% .125W F TC=0+-100 | 91637 | CMF-55-1, T-1 |
| A86R125 | 0698-4121 | 3 | 1 | RESISTOR 11.3K 1% .125W F TC=0+-100 | 19701 | SFR25H |
| A86R126 | 0683-1225 | 1 | 1 | RESISTOR 1.2K 5% .25W CF TC=0-400 | 77902 | R-25J |
| A86R127 | 0757-0427 | 0 | 1 | RESISTOR 1.5K 1% .125W F TC=0+-100 | 19701 | SFR25H |
| A86TP1 | 1251-0600 | 0 | 8 | CONNECTOR-SGL CONT PIN 1.14-MM-BSC-SZ SQ27264 | 27264 | 16-06-0034 |
| A86TP2 | 1251-0600 | 0 | | CONNECTOR-SGL CONT PIN 1.14-MM-BSC-SZ SQ27264 | 27264 | 16-06-0034 |
| A86TP3 | 1251-0600 | 0 | | CONNECTOR-SGL CONT PIN 1.14-MM-BSC-SZ SQ27264 | 27264 | 16-06-0034 |
| A86TP5 | 1251-0600 | 0 | | CONNECTOR-SGL CONT PIN 1.14-MM-BSC-SZ SQ27264 | 27264 | 16-06-0034 |
| A86TP6 | 1251-0600 | 0 | | CONNECTOR-SGL CONT PIN 1.14-MM-BSC-SZ SQ27264 | 27264 | 16-06-0034 |
| A86TP7 | 1251-0600 | 0 | | CONNECTOR-SGL CONT PIN 1.14-MM-BSC-SZ SQ27264 | 27264 | 16-06-0034 |
| A86TP8 | 1251-0600 | 0 | | CONNECTOR-SGL CONT PIN 1.14-MM-BSC-SZ SQ27264 | 27264 | 16-06-0034 |
| A86TP9 | 1251-0600 | 0 | | CONNECTOR-SGL CONT PIN 1.14-MM-BSC-SZ SQ27264 | 27264 | 16-06-0034 |
| A86U1 | 1826-0396 | 0 | 1 | IC V RGLTR-FXD-POS 14.4/15.6V TO-220 PKG27014 | 27014 | |
| A86U2 | 1826-0214 | 1 | 1 | IC V RGLTR-FXD-NEG 14.4/15.6V TO-220 PKG04713 | 04713 | |
| A86U3 | 1826-0508 | 6 | 1 | D/A 10-BIT 16-CBRZ/SDR BPLR | 24355 | |
| A86U4 | 1826-0413 | 2 | 2 | IC OP AMP LOW-BIAS-H-IMPD TO-99 PKG | 34371 | |
| A86U5 | 1826-0188 | 8 | 3 | D/A 8-BIT 16-CERDIP BPLR | 04713 | |
| A86U6 | 1826-0319 | 7 | 11 | IC OP AMP LOW-BIAS-H-IMPD TO-99 PKG | 27014 | |
| A86U7 | 1826-0188 | 8 | | D/A 8-BIT 16-CERDIP BPLR | 04713 | |
| A86U8 | 1826-0188 | 8 | | D/A 8-BIT 16-CERDIP BPLR | 04713 | |
| A86U9 | 1826-0319 | 7 | | IC OP AMP LOW-BIAS-H-IMPD TO-99 PKG | 27014 | |
| A86U10 | 1826-0413 | 2 | | IC OP AMP LOW-BIAS-H-IMPD TO-99 PKG | 34371 | |
| A86U11 | 1826-0374 | 4 | 1 | IC SWITCH CUR 16-DIP-C PKG | 28480 | 1826-0374 |
| A86U12 | 1826-0319 | 7 | | IC OP AMP LOW-BIAS-H-IMPD TO-99 PKG | 27014 | |
| A86U13 | 1820-1546 | 2 | 1 | ANALOG MULTIPLEXER 4 CHNL 16 -CERDIP | 04713 | |
| A86U14 | 1826-0319 | 7 | | IC OP AMP LOW-BIAS-H-IMPD TO-99 PKG | 27014 | |
| A86U15 | 1826-0319 | 7 | | IC OP AMP LOW-BIAS-H-IMPD TO-99 PKG | 27014 | |
| A86U16 | 1826-0319 | 7 | | IC OP AMP LOW-BIAS-H-IMPD TO-99 PKG | 27014 | |
| A86U17 | 1826-0846 | 5 | 1 | ANALOG SWITCH 4 SPST 16 -CBRZ/SDR | 27014 | |
| A86U18 | 1826-0319 | 7 | | IC OP AMP LOW-BIAS-H-IMPD TO-99 PKG | 27014 | |
| A86U19 | 1826-0319 | 7 | | IC OP AMP LOW-BIAS-H-IMPD TO-99 PKG | 27014 | |
| A86U20 | 1826-0319 | 7 | | IC OP AMP LOW-BIAS-H-IMPD TO-99 PKG | 27014 | |
| A86U21 | 1826-0319 | 7 | | IC OP AMP LOW-BIAS-H-IMPD TO-99 PKG | 27014 | |
| A86U22 | 1820-1274 | 3 | 1 | IC GATE TTL LS NAND DUAL 4-INP | 01295 | |
| A86U23 | 1820-0493 | 6 | 2 | IC OP AMP GP 8-DIP-P PKG | 27014 | |
| A86U24 | 1820-0493 | 6 | | IC OP AMP GP 8-DIP-P PKG | 27014 | |
| A86U25 | 1826-0319 | 7 | | IC OP AMP LOW-BIAS-H-IMPD TO-99 PKG | 27014 | |
| | 1258-0141 | 8 | 3 | CON-JUMPER REM .025P | 22526 | 65474-004 |
| | 2200-0103 | 2 | 2 | SCREW-MACH 4-40 .25-IN-LG PAN-HD-POZI | 83486 | |
| | 2260-0009 | 3 | 2 | NUT-HEX-W/LKWR 4-40-THD .094-IN-THK | 73734 | |
| | 1854-0515 | 4 | | TRANSISTOR-DUAL NPN TO-77 PD=600MW | 50721 | |
| | 0340-1169 | 6 | 1 | NSLTR-BSNG .038TK TO-72 NYLNA | 32559 | 118-055 |
| **A87** | **03585-66587** | **4** | **1** | **KEYBOARD PC BD ASSEMBLY** | **28480** | **03585-66587** |
| A87C2 | 0160-3847 | 9 | 7 | CAPACITOR-FXD .01UF +100-0% 50VDC CER | 04222 | SA105C103KAA |
| A87C3 | 0160-3847 | 9 | | CAPACITOR-FXD .01UF +100-0% 50VDC CER | 04222 | SA105C103KAA |
| A87C4 | 0160-3847 | 9 | | CAPACITOR-FXD .01UF +100-0% 50VDC CER | 04222 | SA105C103KAA |
| A87C5 | 0160-3847 | 9 | | CAPACITOR-FXD .01UF +100-0% 50VDC CER | 04222 | SA105C103KAA |
| A87C6 | 0160-3847 | 9 | | CAPACITOR-FXD .01UF +100-0% 50VDC CER | 04222 | SA105C103KAA |

See introduction to this section for ordering information
* Indicates one of several possible values installed

# Table 9-3. Replaceable Parts

| Reference Designation | HP Part Number | C D | Qty. | Description | Mfr. Code | Mfr. Part Number |
|---|---|---|---|---|---|---|
| A87C7 | 0160-3847 | 9 | | CAPACITOR-FXD .01UF +100-0% 50VDC CER | 04222 | SA105C103KAA |
| A87C8 | 0160-3847 | 9 | | CAPACITOR-FXD .01UF +100-0% 50VDC CER | 04222 | SA105C103KAA |
| A87C9 | 0180-0309 | 4 | 1 | CAPACITOR-FXD 4.7UF+-20% 10VDC TA | 13606 | 150D475X0010A2-DYS |
| A87DS1 | 1990-0486 | 6 | 2 | LED-LAMP LUM-INT=2MCD IF=25MA-MAX BVR=5V28480 | 28480 | 1990-0486 |
| A87DS2 | 1990-0597 | 0 | 26 | LED-LAMP LUM-INT=1MCD IF=60MA-MAX BVR=5V28480 | 28480 | 1990-0597 |
| A87DS3 | 1990-0597 | 0 | | LED-LAMP LUM-INT=1MCD IF=60MA-MAX BVR=5V28480 | 28480 | 1990-0597 |
| A87DS4 | 1990-0597 | 0 | | LED-LAMP LUM-INT=1MCD IF=60MA-MAX BVR=5V28480 | 28480 | 1990-0597 |
| A87DS5 | 1990-0597 | 0 | | LED-LAMP LUM-INT=1MCD IF=60MA-MAX BVR=5V28480 | 28480 | 1990-0597 |
| A87DS6 | 1990-0597 | 0 | | LED-LAMP LUM-INT=1MCD IF=60MA-MAX BVR=5V28480 | 28480 | 1990-0597 |
| A87DS7 | 1990-0487 | 7 | 6 | LED-LAMP LUM-INT=2MCD BVR=5V | 28480 | 1990-0487 |
| A87DS8 | 1990-0487 | 7 | | LED-LAMP LUM-INT=2MCD BVR=5V | 28480 | 1990-0487 |
| A87DS9 | 1990-0597 | 0 | | LED-LAMP LUM-INT=1MCD IF=60MA-MAX BVR=5V28480 | 28480 | 1990-0597 |
| A87DS10 | 1990-0597 | 0 | | LED-LAMP LUM-INT=1MCD IF=60MA-MAX BVR=5V28480 | 28480 | 1990-0597 |
| A87DS11 | 1990-0597 | 0 | | LED-LAMP LUM-INT=1MCD IF=60MA-MAX BVR=5V28480 | 28480 | 1990-0597 |
| A87DS12 | 1990-0597 | 0 | | LED-LAMP LUM-INT=1MCD IF=60MA-MAX BVR=5V28480 | 28480 | 1990-0597 |
| A87DS13 | 1990-0597 | 0 | | LED-LAMP LUM-INT=1MCD IF=60MA-MAX BVR=5V28480 | 28480 | 1990-0597 |
| A87DS14 | 1990-0597 | 0 | | LED-LAMP LUM-INT=1MCD IF=60MA-MAX BVR=5V28480 | 28480 | 1990-0597 |
| A87DS15 | 1990-0597 | 0 | | LED-LAMP LUM-INT=1MCD IF=60MA-MAX BVR=5V28480 | 28480 | 1990-0597 |
| A87DS16 | 1990-0597 | 0 | | LED-LAMP LUM-INT=1MCD IF=60MA-MAX BVR=5V28480 | 28480 | 1990-0597 |
| A87DS17 | 1990-0597 | 0 | | LED-LAMP LUM-INT=1MCD IF=60MA-MAX BVR=5V28480 | 28480 | 1990-0597 |
| A87DS18 | 1990-0597 | 0 | | LED-LAMP LUM-INT=1MCD IF=60MA-MAX BVR=5V28480 | 28480 | 1990-0597 |
| A87DS19 | 1990-0597 | 0 | | LED-LAMP LUM-INT=1MCD IF=60MA-MAX BVR=5V28480 | 28480 | 1990-0597 |
| A87DS20 | 1990-0597 | 0 | | LED-LAMP LUM-INT=1MCD IF=60MA-MAX BVR=5V28480 | 28480 | 1990-0597 |
| A87DS21 | 1990-0597 | 0 | | LED-LAMP LUM-INT=1MCD IF=60MA-MAX BVR=5V28480 | 28480 | 1990-0597 |
| A87DS22 | 1990-0597 | 0 | | LED-LAMP LUM-INT=1MCD IF=60MA-MAX BVR=5V28480 | 28480 | 1990-0597 |
| A87DS23 | 1990-0597 | 0 | | LED-LAMP LUM-INT=1MCD IF=60MA-MAX BVR=5V28480 | 28480 | 1990-0597 |
| A87DS24 | 1990-0597 | 0 | | LED-LAMP LUM-INT=1MCD IF=60MA-MAX BVR=5V28480 | 28480 | 1990-0597 |
| A87DS25 | 1990-0597 | 0 | | LED-LAMP LUM-INT=1MCD IF=60MA-MAX BVR=5V28480 | 28480 | 1990-0597 |
| A87DS26 | 1990-0597 | 0 | | LED-LAMP LUM-INT=1MCD IF=60MA-MAX BVR=5V28480 | 28480 | 1990-0597 |
| A87DS27 | 1990-0597 | 0 | | LED-LAMP LUM-INT=1MCD IF=60MA-MAX BVR=5V28480 | 28480 | 1990-0597 |
| A87DS28 | 1990-0597 | 0 | | LED-LAMP LUM-INT=1MCD IF=60MA-MAX BVR=5V28480 | 28480 | 1990-0597 |
| A87DS29 | 1990-0487 | 7 | | LED-LAMP LUM-INT=2MCD BVR=5V | 28480 | 1990-0487 |
| A87DS30 | 1990-0487 | 7 | | LED-LAMP LUM-INT=2MCD BVR=5V | 28480 | 1990-0487 |
| A87DS31 | 1990-0487 | 7 | | LED-LAMP LUM-INT=2MCD BVR=5V | 28480 | 1990-0487 |
| A87DS32 | 1990-0487 | 7 | | LED-LAMP LUM-INT=2MCD BVR=5V | 28480 | 1990-0487 |
| A87DS33 | 1990-0597 | 0 | | LED-LAMP LUM-INT=1MCD IF=60MA-MAX BVR=5V28480 | 28480 | 1990-0597 |
| A87DS34 | 1990-0486 | 6 | | LED-LAMP LUM-INT=2MCD IF=25MA-MAX BVR=5V28480 | 28480 | 1990-0486 |
| A87DS35 | 1990-0485 | 5 | 1 | LED-LAMP LUM-INT=2MCD IF=30MA-MAX BVR=5V28480 | 28480 | 1990-0485 |
| A87P1 | 1251-8601 | 7 | 1 | CONN-POST TYPE .100-PIN-SPCG 34-CONT | 04726P02 | 3594-6002 |
| A87P2 | 1251-5041 | 3 | 1 | CONN-POST TYPE .100-PIN-SPCG 5-CONT | 22526 | 66800-105 |
| A87R1 | 0683-3315 | 4 | 9 | RESISTOR 330 5% .25W CF TC=0-400 | 77902 | R-25J |
| A87R2 | 0683-3315 | 4 | | RESISTOR 330 5% .25W CF TC=0-400 | 77902 | R-25J |
| A87R3 | 0683-3315 | 4 | | RESISTOR 330 5% .25W CF TC=0-400 | 77902 | R-25J |
| A87R4 | 0683-3315 | 4 | | RESISTOR 330 5% .25W CF TC=0-400 | 77902 | R-25J |
| A87R5 | 0683-3315 | 4 | | RESISTOR 330 5% .25W CF TC=0-400 | 77902 | R-25J |
| A87R6 | 0683-3315 | 4 | | RESISTOR 330 5% .25W CF TC=0-400 | 77902 | R-25J |
| A87R7 | 0683-3315 | 4 | | RESISTOR 330 5% .25W CF TC=0-400 | 77902 | R-25J |
| A87R8 | 0683-3315 | 4 | | RESISTOR 330 5% .25W CF TC=0-400 | 77902 | R-25J |
| A87R9 | 0683-3315 | 4 | | RESISTOR 330 5% .25W CF TC=0-400 | 77902 | R-25J |
| A87RP1 | 1810-0402 | 6 | 4 | NETWORK-RES 16-DIP 330.0 OHM X 8 | 11236 | 761-3-R330 |
| A87RP2 | 1810-0402 | 6 | | NETWORK-RES 16-DIP 330.0 OHM X 8 | 11236 | 761-3-R330 |
| A87RP3 | 1810-0402 | 6 | | NETWORK-RES 16-DIP 330.0 OHM X 8 | 11236 | 761-3-R330 |
| A87RP4 | 1810-0402 | 6 | | NETWORK-RES 16-DIP 330.0 OHM X 8 | 11236 | 761-3-R330 |
| A87SW1 | 5060-9436 | 7 | 73 | SW--PB BILL WEST | 31918 | 5560-9436 |
| A87SW2 | 5060-9436 | 7 | | SW--PB BILL WEST | 31918 | 5560-9436 |
| A87SW3 | 5060-9436 | 7 | | SW--PB BILL WEST | 31918 | 5560-9436 |
| A87SW4 | 5060-9436 | 7 | | SW--PB BILL WEST | 31918 | 5560-9436 |
| A87SW5 | 5060-9436 | 7 | | SW--PB BILL WEST | 31918 | 5560-9436 |
| A87SW6 | 5060-9436 | 7 | | SW--PB BILL WEST | 31918 | 5560-9436 |
| A87SW7 | 5060-9436 | 7 | | SW--PB BILL WEST | 31918 | 5560-9436 |
| A87SW8 | 5060-9436 | 7 | | SW--PB BILL WEST | 31918 | 5560-9436 |
| A87SW9 | 5060-9436 | 7 | | SW--PB BILL WEST | 31918 | 5560-9436 |
| A87SW10 | 5060-9436 | 7 | | SW--PB BILL WEST | 31918 | 5560-9436 |
| A87SW11 | 5060-9436 | 7 | | SW--PB BILL WEST | 31918 | 5560-9436 |
| A87SW12 | 5060-9436 | 7 | | SW--PB BILL WEST | 31918 | 5560-9436 |

See introduction to this section for ordering information
* Indicates one of several possible values installed

## Table 9-3. Replaceable Parts

| Reference Designation | HP Part Number | C D | Qty. | Description | Mfr. Code | Mfr. Part Number |
|---|---|---|---|---|---|---|
| A87SW13 | 5060-9436 | 7 | | SW--PB BILL WEST | 31918 | 5560-9436 |
| A87SW14 | 5060-9436 | 7 | | SW--PB BILL WEST | 31918 | 5560-9436 |
| A87SW15 | 5060-9436 | 7 | | SW--PB BILL WEST | 31918 | 5560-9436 |
| A87SW16 | 5060-9436 | 7 | | SW--PB BILL WEST | 31918 | 5560-9436 |
| A87SW17 | 5060-9436 | 7 | | SW--PB BILL WEST | 31918 | 5560-9436 |
| A87SW18 | 5060-9436 | 7 | | SW--PB BILL WEST | 31918 | 5560-9436 |
| A87SW19 | 5060-9436 | 7 | | SW--PB BILL WEST | 31918 | 5560-9436 |
| A87SW20 | 5060-9436 | 7 | | SW--PB BILL WEST | 31918 | 5560-9436 |
| A87SW21 | 5060-9436 | 7 | | SW--PB BILL WEST | 31918 | 5560-9436 |
| A87SW22 | 5060-9436 | 7 | | SW--PB BILL WEST | 31918 | 5560-9436 |
| A87SW23 | 5060-9436 | 7 | | SW--PB BILL WEST | 31918 | 5560-9436 |
| A87SW24 | 5060-9436 | 7 | | SW--PB BILL WEST | 31918 | 5560-9436 |
| A87SW25 | 5060-9436 | 7 | | SW--PB BILL WEST | 31918 | 5560-9436 |
| A87SW26 | 5060-9436 | 7 | | SW--PB BILL WEST | 31918 | 5560-9436 |
| A87SW27 | 5060-9436 | 7 | | SW--PB BILL WEST | 31918 | 5560-9436 |
| A87SW28 | 5060-9436 | 7 | | SW--PB BILL WEST | 31918 | 5560-9436 |
| A87SW29 | 5060-9436 | 7 | | SW--PB BILL WEST | 31918 | 5560-9436 |
| A87SW31 | 5060-9436 | 7 | | SW--PB BILL WEST | 31918 | 5560-9436 |
| A87SW32 | 5060-9436 | 7 | | SW--PB BILL WEST | 31918 | 5560-9436 |
| A87SW33 | 5060-9436 | 7 | | SW--PB BILL WEST | 31918 | 5560-9436 |
| A87SW34 | 5060-9436 | 7 | | SW--PB BILL WEST | 31918 | 5560-9436 |
| A87SW35 | 5060-9436 | 7 | | SW--PB BILL WEST | 31918 | 5560-9436 |
| A87SW36 | 5060-9436 | 7 | | SW--PB BILL WEST | 31918 | 5560-9436 |
| A87SW37 | 5060-9436 | 7 | | SW--PB BILL WEST | 31918 | 5560-9436 |
| A87SW39 | 5060-9436 | 7 | | SW--PB BILL WEST | 31918 | 5560-9436 |
| A87SW40 | 5060-9436 | 7 | | SW--PB BILL WEST | 31918 | 5560-9436 |
| A87SW41 | 5060-9436 | 7 | | SW--PB BILL WEST | 31918 | 5560-9436 |
| A87SW42 | 5060-9436 | 7 | | SW--PB BILL WEST | 31918 | 5560-9436 |
| A87SW43 | 5060-9436 | 7 | | SW--PB BILL WEST | 31918 | 5560-9436 |
| A87SW44 | 5060-9436 | 7 | | SW--PB BILL WEST | 31918 | 5560-9436 |
| A87SW46 | 5060-9436 | 7 | | SW--PB BILL WEST | 31918 | 5560-9436 |
| A87SW47 | 5060-9436 | 7 | | SW--PB BILL WEST | 31918 | 5560-9436 |
| A87SW48 | 5060-9436 | 7 | | SW--PB BILL WEST | 31918 | 5560-9436 |
| A87SW49 | 5060-9436 | 7 | | SW--PB BILL WEST | 31918 | 5560-9436 |
| A87SW50 | 5060-9436 | 7 | | SW--PB BILL WEST | 31918 | 5560-9436 |
| A87SW51 | 5060-9436 | 7 | | SW--PB BILL WEST | 31918 | 5560-9436 |
| A87SW52 | 5060-9436 | 7 | | SW--PB BILL WEST | 31918 | 5560-9436 |
| A87SW53 | 5060-9436 | 7 | | SW--PB BILL WEST | 31918 | 5560-9436 |
| A87SW54 | 5060-9436 | 7 | | SW--PB BILL WEST | 31918 | 5560-9436 |
| A87SW55 | 5060-9436 | 7 | | SW--PB BILL WEST | 31918 | 5560-9436 |
| A87SW56 | 5060-9436 | 7 | | SW--PB BILL WEST | 31918 | 5560-9436 |
| A87SW57 | 5060-9436 | 7 | | SW--PB BILL WEST | 31918 | 5560-9436 |
| A87SW58 | 5060-9436 | 7 | | SW--PB BILL WEST | 31918 | 5560-9436 |
| A87SW59 | 5060-9436 | 7 | | SW--PB BILL WEST | 31918 | 5560-9436 |
| A87SW60 | 5060-9436 | 7 | | SW--PB BILL WEST | 31918 | 5560-9436 |
| A87SW61 | 5060-9436 | 7 | | SW--PB BILL WEST | 31918 | 5560-9436 |
| A87SW62 | 5060-9436 | 7 | | SW--PB BILL WEST | 31918 | 5560-9436 |
| A87SW63 | 5060-9436 | 7 | | SW--PB BILL WEST | 31918 | 5560-9436 |
| A87SW64 | 5060-9436 | 7 | | SW--PB BILL WEST | 31918 | 5560-9436 |
| A87SW66 | 5060-9436 | 7 | | SW--PB BILL WEST | 31918 | 5560-9436 |
| A87SW67 | 5060-9436 | 7 | | SW--PB BILL WEST | 31918 | 5560-9436 |
| A87SW68 | 5060-9436 | 7 | | SW--PB BILL WEST | 31918 | 5560-9436 |
| A87SW69 | 5060-9436 | 7 | | SW--PB BILL WEST | 31918 | 5560-9436 |
| A87SW70 | 5060-9436 | 7 | | SW--PB BILL WEST | 31918 | 5560-9436 |
| A87SW73 | 5060-9436 | 7 | | SW--PB BILL WEST | 31918 | 5560-9436 |
| A87SW74 | 5060-9436 | 7 | | SW--PB BILL WEST | 31918 | 5560-9436 |
| A87SW75 | 5060-9436 | 7 | | SW--PB BILL WEST | 31918 | 5560-9436 |
| A87SW76 | 5060-9436 | 7 | | SW--PB BILL WEST | 31918 | 5560-9436 |
| A87SW77 | 5060-9436 | 7 | | SW--PB BILL WEST | 31918 | 5560-9436 |
| A87SW78 | 5060-9436 | 7 | | SW--PB BILL WEST | 31918 | 5560-9436 |
| A87SW79 | 5060-9436 | 7 | | SW--PB BILL WEST | 31918 | 5560-9436 |
| A87U1 | 1820-3022 | 3 | 4 | IC SHF-RGTR TTL LS D-TYPE SERIAL-IN | 01295 | |
| A87U2 | 1820-3022 | 3 | | IC SHF-RGTR TTL LS D-TYPE SERIAL-IN | 01295 | |
| A87U3 | 1820-3022 | 3 | | IC SHF-RGTR TTL LS D-TYPE SERIAL-IN | 01295 | |
| A87U4 | 1820-3022 | 3 | | IC SHF-RGTR TTL LS D-TYPE SERIAL-IN | 01295 | |

See introduction to this section for ordering information
* Indicates one of several possible values installed

# Table 9-3. Replaceable Parts

| Reference Designation | HP Part Number | C D | Qty. | Description | Mfr. Code | Mfr. Part Number |
|---|---|---|---|---|---|---|
| A87U5 | 1820-1112 | 8 | 1 | IC FF TTL LS D-TYPE POS-EDGE-TRIG | 01295 | |
| A87U6 | 1820-1194 | 6 | 1 | IC CNTR TTL LS BIN UP/DOWN SYNCHRO | 01295 | |
| A87U7 | 1820-1246 | 9 | 2 | IC GATE TTL LS AND QUAD 2-INP | 01295 | |
| A87U8 | 1820-1246 | 9 | | IC GATE TTL LS AND QUAD 2-INP | 01295 | |
| | 05328-40003 | 8 | 9 | MOLD STAND-L.E.D | 28480 | 05328-40003 |
| **A89** | **03585-66589** | **6** | **1** | **POWER SUPPLY PC BD ASSEMBLY** | **28480** | **03585-66589** |
| A89C1 | 0180-0291 | 3 | 7 | CAPACITOR-FXD 1UF+-10% 35VDC TA | 13606 | 150D105X9035A2-DYS |
| A89C2 | 0180-0291 | 3 | | CAPACITOR-FXD 1UF+-10% 35VDC TA | 13606 | 150D105X9035A2-DYS |
| A89C3 | 0180-0291 | 3 | | CAPACITOR-FXD 1UF+-10% 35VDC TA | 13606 | 150D105X9035A2-DYS |
| A89C8 | 0180-3373 | 8 | 2 | CAPACITOR-FXD 2200UF+-20% 35VDC AL | 62643 | SM35VB2200M |
| A89C9 | 0180-3373 | 8 | | CAPACITOR-FXD 2200UF+-20% 35VDC AL | 62643 | SM35VB2200M |
| A89CR1 | 1901-0026 | 3 | 3 | DIODE-PWR RECT 200V 750MA DO-29 | 04713 | |
| A89CR2 | 1901-0026 | 3 | | DIODE-PWR RECT 200V 750MA DO-29 | 04713 | |
| A89CR3 | 1901-0026 | 3 | | DIODE-PWR RECT 200V 750MA DO-29 | 04713 | |
| A89CR4 | 1901-0662 | 3 | 1 | DIODE-PWR RECT 100V 6A | 04713 | |
| A89CR6 | 1902-0909 | 3 | 1 | DIODE-ZNR 1N2972A 8.2V 10% DO-4 PD=10W | 04713 | |
| A89J1 | 1251-3196 | 5 | 1 | CONN-POST TYPE .156-PIN-SPCG 8-CONT | 27264 | 09-60-1081(2403-08A) |
| A89J2 | 1251-3475 | 3 | 1 | CONN-POST TYPE .156-PIN-SPCG 10-CONT | 27264 | 09-60-1101 |
| A89J3 | 1251-3276 | 2 | 1 | CONN-POST TYPE .156-PIN-SPCG 6-CONT | 27264 | 09-60-1061 |
| A89J4 | 1251-3981 | 6 | 1 | CONN-POST TYPE .156-PIN-SPCG 9-CONT | 27264 | 09-60-1091 |
| A89J5 | 1251-3618 | 6 | 2 | CONN-POST TYPE .156-PIN-SPCG 2-CONT | 27264 | 09-60-1021 |
| A89J6 | 1251-4659 | 7 | 1 | CONN-POST TYPE .156-PIN-SPCG 14-CONT | 27264 | 09-60-1141 |
| A89J7 | 1251-3618 | 6 | | CONN-POST TYPE .156-PIN-SPCG 2-CONT | 27264 | 09-60-1021 |
| A89J9 | 1251-3192 | 1 | 1 | CONN-POST TYPE .156-PIN-SPCG 3-CONT | 27264 | 09-60-1031 |
| A89J10 | 1251-3195 | 4 | 1 | CONN-POST TYPE .156-PIN-SPCG 4-CONT | 27264 | 09-60-1041 |
| A89MP1 | 0340-0580 | 3 | 1 | INSULATOR-XSTR THRM-CNDCT | 55285 | 7403-09FR-02 |
| A89MP3 | 0360-0053 | 7 | 1 | TERMINAL-SLDR LUG LK-MTG FOR-%10-SCR | 79963 | 806-196 |
| A89MP4 | 0380-0046 | 0 | 3 | SPACER-RVT-ON .375-IN-LG .152-IN-ID | 00866 | |
| A89MP5 | 0380-0046 | 0 | | SPACER-RVT-ON .375-IN-LG .152-IN-ID | 00866 | |
| A89MP6 | 0380-0046 | 0 | | SPACER-RVT-ON .375-IN-LG .152-IN-ID | 00866 | |
| A89MP8 | 0590-1054 | 7 | 2 | THREADED INSERT-NUT 6-32 .065-IN-LG SST | 46384 | KFS2-632 |
| A89MP9 | 0590-1054 | 7 | | THREADED INSERT-NUT 6-32 .065-IN-LG SST | 46384 | KFS2-632 |
| A89MP10 | 0590-1136 | 6 | 1 | THREADED INSERT-NUT 10-32 .125-IN-LG | 46384 | KFS2-032 |
| A89MP11 | 1200-0452 | 3 | 1 | SOCKET-XSTR 2-CONT TO-3 SLDR-EYE | 91506 | 8080-1G1 |
| A89MP14 | 2190-0913 | 9 | 2 | WASHER-LK HLCL NO. 4 .115-IN-ID | 70318 | |
| A89MP15 | 2190-0913 | 9 | | WASHER-LK HLCL NO. 4 .115-IN-ID | 70318 | |
| A89MP18 | 2200-0169 | 0 | 1 | SCREW-MACH 4-40 .5-IN-LG 82 DEG | 83486 | |
| A89MP20 | 2260-0002 | 6 | 2 | NUT-HEX-DBL-CHAM 4-40-THD .062-IN-THK | 77250 | |
| A89MP21 | 2260-0002 | 6 | | NUT-HEX-DBL-CHAM 4-40-THD .062-IN-THK | 77250 | |
| A89MP24 | 2360-0117 | 6 | 2 | SCREW-MACH 6-32 .375-IN-LG PAN-HD-POZI | 83486 | |
| A89MP25 | 2360-0117 | 6 | | SCREW-MACH 6-32 .375-IN-LG PAN-HD-POZI | 83486 | |
| A89MP28 | 3050-0066 | 8 | 4 | WASHER-FL MTLC NO. 6 .147-IN-ID | 73734 | 1451 |
| A89MP29 | 3050-0066 | 8 | | WASHER-FL MTLC NO. 6 .147-IN-ID | 73734 | 1451 |
| A89MP30 | 3050-0066 | 8 | | WASHER-FL MTLC NO. 6 .147-IN-ID | 73734 | 1451 |
| A89MP31 | 3050-0066 | 8 | | WASHER-FL MTLC NO. 6 .147-IN-ID | 73734 | 1451 |
| A89MP32 | 3050-0716 | 5 | 1 | WASHER-FL MTLC NO. 5 .128-IN-ID | 70318 | NAS620-C5 |
| A89MP42 | 8150-4270 | 1 | 1 | JMPR 22GA BLK 50MM 8x8 | 28480 | |
| A89MP43 | 8150-4275 | 6 | 1 | JMPR 22GA BLK 75MM 8x8 | 28480 | |
| A89MP45 | 03585-01232 | 0 | 1 | SHTF BRKT-HT SINK AL | 28480 | 03585-01232 |
| A89R1 | 0683-4705 | 8 | 1 | RESISTOR 47 5% .25W CF TC=0-400 | 77902 | R-25J |
| A89R2 | 0811-3329 | 3 | 2 | RESISTOR 2.7 5% 3W PW TC=0+-50 | 91637 | CW-2B-39 |
| A89R3 | 0811-3329 | 3 | | RESISTOR 2.7 5% 3W PW TC=0+-50 | 91637 | CW-2B-39 |
| A89R4 | 0757-0408 | 7 | 1 | RESISTOR 243 1% .125W F TC=0+-100 | 19701 | SFR25H |
| A89R5 | 0698-4432 | 9 | 1 | RESISTOR 2.1K 1% .125W F TC=0+-100 | 91637 | CMF-55-1, T-1 |
| A89R6 | 0683-1005 | 5 | 1 | RESISTOR 10 5% .25W CF TC=0-400 | 77902 | R-25J |
| A89T1 | 9100-4031 | 8 | 1 | TRANSFORMER IND: 2.25 MAY -10%, +50%, DC91637 | 91637 | IPE-1229-10 |
| A89T2 | 9100-3454 | 7 | 1 | TRANSFORMER-ISOLATION VOLTAGE RATIO: 1:100323P01 | 00323P01 | |
| A89U1 | 1826-0403 | 0 | 1 | IC V RGLTR-FXD-NEG 14.25/15.75V TO-3 PKG06545P01 | 06545P01 | |
| | 1826-0393 | 7 | 1 | IC V RGLTR-ADJ-POS 1.2/37V TO-220 PKG | 27014 | |
| | 0510-0002 | 5 | 3 | THREADED INSERT-NUT 6-32 .062-IN-LG STL | 46384 | S-632-2 |
| | 7102-0046 | 9 | 1 | FRAME-XFMR | 1EA09 | |
| | 0180-0291 | 3 | | CAPACITOR-FXD 1UF+-10% 35VDC TA | 13606 | 150D105X9035A2-DYS |
| | 2200-0109 | 8 | 1 | SCREW-MACH 4-40 .438-IN-LG PAN-HD-POZI | 83486 | |
| | 8150-4321 | 3 | 1 | JMPR 22GA RED 75MM 8x8 | 28480 | |
| | 8150-4325 | 7 | 1 | JMPR 22GA RED 100MM 8x8 | 28480 | |
| | 8150-4394 | 0 | 1 | JMPR 22GA GRN 75MM 8x8 | 28480 | |

See introduction to this section for ordering information
* Indicates one of several possible values installed

## Table 9-3. Replaceable Parts

| Reference Designation | HP Part Number | C D | Qty. | Description | Mfr. Code | Mfr. Part Number |
|---|---|---|---|---|---|---|
| | 8150-4419 | 0 | 1 | JMPR 22GA BLU 75MM 8x8 | 28480 | |
| | 8150-4492 | 9 | 1 | JMPR 22GA WHT 75MM 8x8 | 28480 | |
| | 0340-0564 | 3 | 1 | INSULATOR-XSTR THRM-CNDCT | 55285 | 7403-09FR-51 |
| | 0340-1012 | 8 | 1 | INSULATOR-FLG-BSHG NYLON | 02267D01 | |
| **A90** | **03585-66590** | **9** | **1** | **PRINTED CIRCUIT BOARD-ASSEMBLY** | **28480** | **03585-66590** |
| A90H1 | 1251-5467 | 7 | 1 | CONNECTOR-PC EDGE 36-CONT/ROW 2-ROWS | 54453 | EXM 36 DREN-S13 |
| A90H2 | 5040-0274 | 1 | 2 | MOLD FOOT PLUG IN | 28480 | 5040-0274 |
| A90H3 | 5040-0274 | 1 | | MOLD FOOT PLUG IN | 28480 | 5040-0274 |
| | 7121-4611 | 2 | 1 | LABEL-INFORMATION .15-IN-WD .6-IN-LG | 28480 | L01003 |
| **A91** | **03585-66591** | **0** | **1** | **PRINTED CIRCUIT BOARD-ASSEMBLY** | **28480** | **03585-66591** |
| A91H1 | 1251-5468 | 8 | 1 | CONNECTOR-PC EDGE 43-CONT/ROW 2-ROWS | 54453 | EXM 43 DSEN-S13 |
| | 7121-4611 | 2 | 1 | LABEL-INFORMATION .15-IN-WD .6-IN-LG | 28480 | L01003 |
| **A92** | **03585-66592** | **1** | **1** | **PRINTED CIRCUIT BOARD-ASSEMBLY** | **28480** | **03585-66592** |
| A92H1 | 1251-3076 | 0 | 1 | CONNECTOR-PC EDGE 18-CONT/ROW 2-ROWS | 04068P01 | 251-18-30-380 |
| | 7121-4611 | 2 | 1 | LABEL-INFORMATION .15-IN-WD .6-IN-LG | 28480 | L01003 |
| **A93** | **03585-66593** | **2** | **1** | **PRINTED CIRCUIT BOARD-ASSEMBLY** | **28480** | **03585-66593** |
| A93H1 | 0403-0029 | 9 | 2 | BUMPER FOOT-SCR .5-IN-MAX-OD.25-IN-THK | 28480 | 0403-0029 |
| A93H2 | 0403-0029 | 9 | | BUMPER FOOT-SCR .5-IN-MAX-OD.25-IN-THK | 28480 | 0403-0029 |
| A93H3 | 1251-1973 | 2 | 1 | CONNECTOR-PC EDGE 10-CONT/ROW 2-ROWS | 12355P01 | SCM10D/4-1HP |
| A93H4 | 2190-0913 | 9 | 1 | WASHER-LK HLCL NO. 4 .115-IN-ID | 70318 | |
| A93H5 | 2200-0107 | 6 | 1 | SCREW-MACH 4-40 .375-IN-LG PAN-HD-POZI | 83486 | |
| A93H6 | 2260-0002 | 6 | 1 | NUT-HEX-DBL-CHAM 4-40-THD .062-IN-THK | 77250 | |
| A93H7 | 3050-0716 | 5 | 1 | WASHER-FL MTLC NO. 5 .128-IN-ID | 70318 | NAS620-C5 |
| | 7121-4611 | 2 | 1 | LABEL-INFORMATION .15-IN-WD .6-IN-LG | 28480 | L01003 |
| **A94** | **03585-66594** | **3** | **1** | **PRINTED CIRCUIT BOARD-ASSEMBLY** | **28480** | **03585-66594** |
| A94H1 | 1251-2160 | 1 | 1 | CONNECTOR-PC EDGE 6-CONT/ROW 2-ROWS | 04068P01 | 251-06-30-380 |
| | 7121-4611 | 2 | 1 | LABEL-INFORMATION .15-IN-WD .6-IN-LG | 28480 | L01003 |
| **A95** | **03585-66595** | **4** | **1** | **PRINTED CIRCUIT BOARD-ASSEMBLY** | **28480** | **03585-66595** |
| A95H1 | 1251-1959 | 4 | 1 | CONNECTOR-PC EDGE 15-CONT/ROW 2-ROWS | 12355P01 | SCM15D/4-1HP |
| | 7121-4611 | 2 | 1 | LABEL-INFORMATION .15-IN-WD .6-IN-LG | 28480 | L01003 |
| **A96** | **03585-66596** | **5** | **1** | **PRINTED CIRCUIT BOARD-ASSEMBLY** | **28480** | **03585-66596** |
| A96H1 | 1251-1959 | 4 | 1 | CONNECTOR-PC EDGE 15-CONT/ROW 2-ROWS | 12355P01 | SCM15D/4-1HP |
| A96H2 | 5040-0274 | 1 | 3 | MOLD FOOT PLUG IN | 28480 | 5040-0274 |
| A96H3 | 5040-0274 | 1 | | MOLD FOOT PLUG IN | 28480 | 5040-0274 |
| A96H4 | 5040-0274 | 1 | | MOLD FOOT PLUG IN | 28480 | 5040-0274 |
| | 7121-4611 | 2 | 1 | LABEL-INFORMATION .15-IN-WD .6-IN-LG | 28480 | L01003 |
| | | | | **MISCELLANEOUS PARTS** | | |
| C1 | 0180-0291 | 3 | 11 | CAPACITOR-FXD 1UF+-10% 35VDC TA | 13606 | 150D105X9035A2-DYS |
| C2 | 0180-0291 | 3 | | CAPACITOR-FXD 1UF+-10% 35VDC TA | 13606 | 150D105X9035A2-DYS |
| C3 | 0180-0291 | 3 | | CAPACITOR-FXD 1UF+-10% 35VDC TA | 13606 | 150D105X9035A2-DYS |
| C4 | 0180-0291 | 3 | | CAPACITOR-FXD 1UF+-10% 35VDC TA | 13606 | 150D105X9035A2-DYS |
| C5 | 0180-0291 | 3 | | CAPACITOR-FXD 1UF+-10% 35VDC TA | 13606 | 150D105X9035A2-DYS |
| C6 | 0180-0291 | 3 | | CAPACITOR-FXD 1UF+-10% 35VDC TA | 13606 | 150D105X9035A2-DYS |
| C7 | 0180-0291 | 3 | | CAPACITOR-FXD 1UF+-10% 35VDC TA | 13606 | 150D105X9035A2-DYS |
| C8 | 0180-3373 | 8 | 2 | CAPACITOR-FXD 2200UF+-20% 35VDC AL | 62643 | SM35VB2200M |
| C9 | 0180-3373 | 8 | | CAPACITOR-FXD 2200UF+-20% 35VDC AL | 62643 | SM35VB2200M |
| CR1 | 1901-0026 | 3 | 3 | DIODE-PWR RECT 200V 750MA DO-29 | 04713 | |
| CR2 | 1901-0026 | 3 | | DIODE-PWR RECT 200V 750MA DO-29 | 04713 | |
| CR3 | 1901-0026 | 3 | | DIODE-PWR RECT 200V 750MA DO-29 | 04713 | |
| CR4 | 1901-0662 | 3 | 1 | DIODE-PWR RECT 100V 6A | 04713 | |
| CR6 | 1902-0909 | 3 | 1 | DIODE-ZNR 1N2972A 8.2V 10% DO-4 PD=10W | 04713 | |
| CR60* | 1902-0579 | 3 | 0 | DIODE-ZNR 5.1V 5% PD=1W IR=10UA | 04713 | |

See introduction to this section for ordering information
* Indicates one of several possible values installed

# Table 9-3. Replaceable Parts

| Reference Designation | HP Part Number | C D | Qty. | Description | Mfr. Code | Mfr. Part Number |
|---|---|---|---|---|---|---|
| CR60* | 1902-3002 | 3 | 0 | DIODE-ZNR 2.37V 5% DO-7 PD=.4W TC=-.074%04713 | 04713 | |
| CR61* | 1902-0579 | 3 | | DIODE-ZNR 5.1V 5% PD=1W IR=10UA | 04713 | |
| CR61* | 1902-3002 | 3 | | DIODE-ZNR 2.37V 5% DO-7 PD=.4W TC=-.074%04713 | 04713 | |
| CR62* | 1902-0579 | 3 | | DIODE-ZNR 5.1V 5% PD=1W IR=10UA | 04713 | |
| CR62* | 1902-3002 | 3 | | DIODE-ZNR 2.37V 5% DO-7 PD=.4W TC=-.074%04713 | 04713 | |
| CR63* | 1902-0579 | 3 | | DIODE-ZNR 5.1V 5% PD=1W IR=10UA | 04713 | |
| CR63* | 1902-3002 | 3 | | DIODE-ZNR 2.37V 5% DO-7 PD=.4W TC=-.074%04713 | 04713 | |
| CR64* | 1902-0579 | 3 | | DIODE-ZNR 5.1V 5% PD=1W IR=10UA | 04713 | |
| CR64* | 1902-3002 | 3 | | DIODE-ZNR 2.37V 5% DO-7 PD=.4W TC=-.074%04713 | 04713 | |
| CR64* | 0410-1206 | 1 | 10 | CRYSTAL-QUARTZ 349.976 KHZ | 00815 | |
| H1 | 0340-0580 | 3 | 2 | INSULATOR-XSTR THRM-CNDCT | 55285 | 7403-09FR-02 |
| H2 | 03585-01212 | 6 | 1 | SHTF BRKT-76 HEAT SINK AL | 28480 | 03585-01212 |
| H3 | 0360-0053 | 7 | 2 | TERMINAL-SLDR LUG LK-MTG FOR-%10-SCR | 79963 | 806-196 |
| H4 | 0380-0046 | 0 | 6 | SPACER-RVT-ON .375-IN-LG .152-IN-ID | 00866 | |
| H5 | 0380-0046 | 0 | | SPACER-RVT-ON .375-IN-LG .152-IN-ID | 00866 | |
| H5 | 1200-0521 | 7 | 1 | CON-SKT IC | 52072 | CA-24-200-DL |
| H6 | 0380-0046 | 0 | | SPACER-RVT-ON .375-IN-LG .152-IN-ID | 00866 | |
| H6 | 1200-0547 | 7 | 1 | CON-CLIP | 52072 | CA-14-200-DL |
| H7 | 0590-0526 | 6 | 1 | THREADED INSERT-NUT 4-40 .065-IN-LG SST | 46384 | KFS2-440 |
| H8 | 0590-1054 | 7 | 4 | THREADED INSERT-NUT 6-32 .065-IN-LG SST | 46384 | KFS2-632 |
| H9 | 0590-1054 | 7 | | THREADED INSERT-NUT 6-32 .065-IN-LG SST | 46384 | KFS2-632 |
| H10 | 0590-1136 | 6 | 2 | THREADED INSERT-NUT 10-32 .125-IN-LG | 46384 | KFS2-032 |
| H11 | 1200-0452 | 3 | 3 | SOCKET-XSTR 2-CONT TO-3 SLDR-EYE | 91506 | 8080-1G1 |
| H12 | 1200-0452 | 3 | | SOCKET-XSTR 2-CONT TO-3 SLDR-EYE | 91506 | 8080-1G1 |
| H14 | 2190-0913 | 9 | 4 | WASHER-LK HLCL NO. 4 .115-IN-ID | 70318 | |
| H15 | 2190-0913 | 9 | | WASHER-LK HLCL NO. 4 .115-IN-ID | 70318 | |
| H16 | 2190-0918 | 4 | 2 | WASHER-LK HLCL NO. 6 .141-IN-ID | 73734 | |
| H17 | 2190-0918 | 4 | | WASHER-LK HLCL NO. 6 .141-IN-ID | 73734 | |
| H18 | 2200-0169 | 0 | 3 | SCREW-MACH 4-40 .5-IN-LG 82 DEG | 83486 | |
| H19 | 2200-0169 | 0 | | SCREW-MACH 4-40 .5-IN-LG 82 DEG | 83486 | |
| H20 | 2260-0002 | 6 | 4 | NUT-HEX-DBL-CHAM 4-40-THD .062-IN-THK | 77250 | |
| H21 | 2260-0002 | 6 | | NUT-HEX-DBL-CHAM 4-40-THD .062-IN-THK | 77250 | |
| H22 | 2360-0115 | 4 | 2 | SCREW-MACH 6-32 .312-IN-LG PAN-HD-POZI | 83486 | |
| H23 | 2360-0115 | 4 | | SCREW-MACH 6-32 .312-IN-LG PAN-HD-POZI | 83486 | |
| H24 | 2360-0117 | 6 | 59 | SCREW-MACH 6-32 .375-IN-LG PAN-HD-POZI | 83486 | |
| H25 | 2360-0117 | 6 | | SCREW-MACH 6-32 .375-IN-LG PAN-HD-POZI | 83486 | |
| H26 | 2360-0195 | 0 | 2 | SCREW-MACH 6-32 .312-IN-LG PAN-HD-POZI | 83486 | |
| H27 | 2360-0195 | 0 | | SCREW-MACH 6-32 .312-IN-LG PAN-HD-POZI | 83486 | |
| H28 | 3050-0066 | 8 | 24 | WASHER-FL MTLC NO. 6 .147-IN-ID | 73734 | 1451 |
| H29 | 3050-0066 | 8 | | WASHER-FL MTLC NO. 6 .147-IN-ID | 73734 | 1451 |
| H30 | 3050-0066 | 8 | | WASHER-FL MTLC NO. 6 .147-IN-ID | 73734 | 1451 |
| H31 | 3050-0066 | 8 | | WASHER-FL MTLC NO. 6 .147-IN-ID | 73734 | 1451 |
| H32 | 3050-0716 | 5 | 3 | WASHER-FL MTLC NO. 5 .128-IN-ID | 70318 | NAS620-C5 |
| H33 | 3050-0716 | 5 | | WASHER-FL MTLC NO. 5 .128-IN-ID | 70318 | NAS620-C5 |
| H42 | 8150-4270 | 1 | 2 | JMPR 22GA BLK 50MM 8x8 | 28480 | |
| H43 | 8150-4275 | 6 | 2 | JMPR 22GA BLK 75MM 8x8 | 28480 | |
| J1 | 1251-3196 | 5 | 1 | CONN-POST TYPE .156-PIN-SPCG 8-CONT | 27264 | 09-60-1081(2403-08A) |
| J1 | 1251-3475 | 3 | 2 | CONN-POST TYPE .156-PIN-SPCG 10-CONT | 27264 | 09-60-1101 |
| J2 | 1200-0888 | 9 | 1 | SOCKET-IC 24-CONT DIP DIP-SLDR | 52072 | CA-24S-10SD |
| J2 | 1251-3475 | 3 | | CONN-POST TYPE .156-PIN-SPCG 10-CONT | 27264 | 09-60-1101 |
| J3 | 1200-0548 | 8 | 2 | SOCKET-IC 14-CONT DIP DIP-SLDR | 52072 | CA-14S-10SD |
| J3 | 1251-3276 | 2 | 1 | CONN-POST TYPE .156-PIN-SPCG 6-CONT | 27264 | 09-60-1061 |
| J4 | 1200-0548 | 8 | | SOCKET-IC 14-CONT DIP DIP-SLDR | 52072 | CA-14S-10SD |
| J4 | 1251-3981 | 6 | 1 | CONN-POST TYPE .156-PIN-SPCG 9-CONT | 27264 | 09-60-1091 |
| J5 | 1251-3618 | 6 | 3 | CONN-POST TYPE .156-PIN-SPCG 2-CONT | 27264 | 09-60-1021 |
| J5 | 1251-3618 | 6 | | CONN-POST TYPE .156-PIN-SPCG 2-CONT | 27264 | 09-60-1021 |
| J6 | 1251-4659 | 7 | 1 | CONN-POST TYPE .156-PIN-SPCG 14-CONT | 27264 | 09-60-1141 |
| J7 | 1251-3618 | 6 | | CONN-POST TYPE .156-PIN-SPCG 2-CONT | 27264 | 09-60-1021 |
| J9 | 1251-3192 | 1 | 1 | CONN-POST TYPE .156-PIN-SPCG 3-CONT | 27264 | 09-60-1031 |
| J10 | 1251-3195 | 4 | 1 | CONN-POST TYPE .156-PIN-SPCG 4-CONT | 27264 | 09-60-1041 |
| J82 | 1251-5157 | 2 | 4 | CONNECTOR-PC EDGE 43-CONT/ROW 2-ROWS | 54453 | EXM 43 DRXN |
| J83 | 1251-5157 | 2 | | CONNECTOR-PC EDGE 43-CONT/ROW 2-ROWS | 54453 | EXM 43 DRXN |
| J85 | 1251-5157 | 2 | | CONNECTOR-PC EDGE 43-CONT/ROW 2-ROWS | 54453 | EXM 43 DRXN |
| J86 | 1251-5157 | 2 | | CONNECTOR-PC EDGE 43-CONT/ROW 2-ROWS | 54453 | EXM 43 DRXN |
| L1 | 9140-0270 | 3 | 1 | INC 200MH | 91637 | IPL-1331-28 |

See introduction to this section for ordering information
* Indicates one of several possible values installed

# Table 9-3. Replaceable Parts

| Reference Designation | HP Part Number | C D | Qty. | Description | Mfr. Code | Mfr. Part Number |
|---|---|---|---|---|---|---|
| MP1 | 0340-0580 | 3 | | INSULATOR-XSTR THRM-CNDCT | 55285 | 7403-09FR-02 |
| MP3 | 0360-0053 | 7 | | TERMINAL-SLDR LUG LK-MTG FOR-%10-SCR | 79963 | 806-196 |
| MP4 | 0380-0046 | 0 | | SPACER-RVT-ON .375-IN-LG .152-IN-ID | 00866 | |
| MP5 | 0380-0046 | 0 | | SPACER-RVT-ON .375-IN-LG .152-IN-ID | 00866 | |
| MP6 | 0380-0046 | 0 | | SPACER-RVT-ON .375-IN-LG .152-IN-ID | 00866 | |
| MP8 | 0590-1054 | 7 | | THREADED INSERT-NUT 6-32 .065-IN-LG SST | 46384 | KFS2-632 |
| MP9 | 0590-1054 | 7 | | THREADED INSERT-NUT 6-32 .065-IN-LG SST | 46384 | KFS2-632 |
| MP10 | 0590-1136 | 6 | | THREADED INSERT-NUT 10-32 .125-IN-LG | 46384 | KFS2-032 |
| MP10 | 0510-0002 | 5 | 15 | THREADED INSERT-NUT 6-32 .062-IN-LG STL | 46384 | S-632-2 |
| MP11 | 1200-0452 | 3 | | SOCKET-XSTR 2-CONT TO-3 SLDR-EYE | 91506 | 8080-1G1 |
| MP14 | 2190-0913 | 9 | | WASHER-LK HLCL NO. 4 .115-IN-ID | 70318 | |
| MP15 | 2190-0913 | 9 | | WASHER-LK HLCL NO. 4 .115-IN-ID | 70318 | |
| MP18 | 2200-0169 | 0 | | SCREW-MACH 4-40 .5-IN-LG 82 DEG | 83486 | |
| MP20 | 2260-0002 | 6 | | NUT-HEX-DBL-CHAM 4-40-THD .062-IN-THK | 77250 | |
| MP21 | 2260-0002 | 6 | | NUT-HEX-DBL-CHAM 4-40-THD .062-IN-THK | 77250 | |
| MP24 | 2360-0117 | 6 | | SCREW-MACH 6-32 .375-IN-LG PAN-HD-POZI | 83486 | |
| MP25 | 2360-0117 | 6 | | SCREW-MACH 6-32 .375-IN-LG PAN-HD-POZI | 83486 | |
| MP28 | 3050-0066 | 8 | | WASHER-FL MTLC NO. 6 .147-IN-ID | 73734 | 1451 |
| MP29 | 3050-0066 | 8 | | WASHER-FL MTLC NO. 6 .147-IN-ID | 73734 | 1451 |
| MP30 | 3050-0066 | 8 | | WASHER-FL MTLC NO. 6 .147-IN-ID | 73734 | 1451 |
| MP31 | 3050-0066 | 8 | | WASHER-FL MTLC NO. 6 .147-IN-ID | 73734 | 1451 |
| MP32 | 3050-0716 | 5 | | WASHER-FL MTLC NO. 5 .128-IN-ID | 70318 | NAS620-C5 |
| MP42 | 8150-4270 | 1 | | JMPR 22GA BLK 50MM 8x8 | 28480 | |
| MP43 | 8150-4275 | 6 | | JMPR 22GA BLK 75MM 8x8 | 28480 | |
| MP45 | 03585-01232 | 0 | 1 | SHTF BRKT-HT SINK AL | 28480 | 03585-01232 |
| R1 | 0683-4705 | 8 | 1 | RESISTOR 47 5% .25W CF TC=0-400 | 77902 | R-25J |
| R2 | 0811-3329 | 3 | 2 | RESISTOR 2.7 5% 3W PW TC=0+-50 | 91637 | CW-2B-39 |
| R3 | 0811-3329 | 3 | | RESISTOR 2.7 5% 3W PW TC=0+-50 | 91637 | CW-2B-39 |
| R4 | 0757-0408 | 7 | 1 | RESISTOR 243 1% .125W F TC=0+-100 | 19701 | SFR25H |
| R5 | 0698-4432 | 9 | 1 | RESISTOR 2.1K 1% .125W F TC=0+-100 | 91637 | CMF-55-1, T-1 |
| R6 | 0683-1005 | 5 | 1 | RESISTOR 10 5% .25W CF TC=0-400 | 77902 | R-25J |
| T1 | 9100-4031 | 8 | 1 | TRANSFORMER IND: 2.25 MAY -10%, +50%, DC91637 | 91637 | IPE-1229-10 |
| T2 | 9100-3454 | 7 | 1 | TRANSFORMER-ISOLATION VOLTAGE RATIO: 1:100323P01 | 00323P01 | |
| TP1 | 1251-0600 | 0 | 1 | CONNECTOR-SGL CONT PIN 1.14-MM-BSC-SZ SQ27264 | 27264 | 16-06-0034 |
| U1 | 1826-0403 | 0 | 1 | IC V RGLTR-FXD-NEG 14.25/15.75V TO-3 PKG06545P01 | 06545P01 | |
| U4 | 1826-0393 | 7 | 1 | IC V RGLTR-ADJ-POS 1.2/37V TO-220 PKG | 27014 | |
| W1 | 8150-4347 | 3 | 2 | JMPR 22GA ORN 75MM 8x8 | 28480 | |
| W2 | 8150-4419 | 0 | 2 | JMPR 22GA BLU 75MM 8x8 | 28480 | |
| W3 | 8150-4394 | 0 | 2 | JMPR 22GA GRN 75MM 8x8 | 28480 | |
| W4 | 8150-4325 | 7 | 2 | JMPR 22GA RED 100MM 8x8 | 28480 | |
| W5 | 8150-4492 | 9 | 2 | JMPR 22GA WHT 75MM 8x8 | 28480 | |
| W6 | 8150-4321 | 3 | 2 | JMPR 22GA RED 75MM 8x8 | 28480 | |
| W7 | 8150-4347 | 3 | | JMPR 22GA ORN 75MM 8x8 | 28480 | |
| | 0624-0663 | 5 | 62 | SCR-TPG 4-40 .25LG PHPZ STLZ | 83486 | |
| | 2360-0117 | 6 | | SCREW-MACH 6-32 .375-IN-LG PAN-HD-POZI | 83486 | |
| | 0624-0675 | 9 | 46 | SCR-TPG 4-40 .31LG PHPZ STLZ | 83486 | |
| | 2200-0103 | 2 | 41 | SCREW-MACH 4-40 .25-IN-LG PAN-HD-POZI | 83486 | |
| | 2510-0041 | 4 | 24 | SCREW-MACH 8-32 .25-IN-LG PAN-HD-POZI | 83486 | |
| | 2200-0107 | 6 | 17 | SCREW-MACH 4-40 .375-IN-LG PAN-HD-POZI | 83486 | |
| | 2360-0113 | 2 | 17 | SCREW-MACH 6-32 .25-IN-LG PAN-HD-POZI | 83486 | |
| | 3050-0066 | 8 | | WASHER-FL MTLC NO. 6 .147-IN-ID | 73734 | 1451 |
| | 0515-1331 | 5 | 16 | SCR-MCH M4.0 6MMLG FHPZ SST * | 77250 | |
| | 2200-0111 | 2 | 14 | SCREW-MACH 4-40 .5-IN-LG PAN-HD-POZI | 83486 | |
| | 3050-0010 | 2 | 13 | WASHER-FL MTLC NO. 6 .147-IN-ID | 78471 | |
| | 2360-0121 | 2 | 13 | SCREW-MACH 6-32 .5-IN-LG PAN-HD-POZI | 83486 | |
| | 0510-0002 | 5 | | THREADED INSERT-NUT 6-32 .062-IN-LG STL | 46384 | S-632-2 |
| | 0624-0264 | 2 | 12 | SCREW-TPG 4-40 .312-IN-LG 82 DEG | 83486 | |
| | 2190-0099 | 2 | 11 | WASHER-LK INTL T 7/16 IN .472-IN-ID | 73734 | |
| | 3050-0105 | 6 | 11 | WASHER-FL MTLC NO. 4 .125-IN-ID | 78471 | |
| | 2950-0035 | 8 | 11 | NUT-HEX-DBL-CHAM 15/32-32-THD | 28480 | |
| | 0890-0025 | 6 | 10 | SPIRAL WRAP .188-2-DIA POLYETH | 00779 | 500001-2 |
| | 2360-0125 | 6 | 10 | SCREW-MACH 6-32 .75-IN-LG PAN-HD-POZI | 83486 | |
| | 2190-0060 | 7 | 9 | WASHER-LK INTL T 1/4 IN .256-IN-ID | 28480 | 2190-0060 |
| | 2420-0001 | 5 | 9 | NUT-HEX-W/LKWR 6-32-THD .109-IN-THK | 73734 | |
| | 03585-61603 | 5 | 9 | CBL-ASM CXL FSMB/FSMB 100MM OR | 28480 | |

See introduction to this section for ordering information
* Indicates one of several possible values installed

# Table 9-3. Replaceable Parts

| Reference Designation | HP Part Number | C D | Qty. | Description | Mfr. Code | Mfr. Part Number |
|---|---|---|---|---|---|---|
| | 03585-61604 | 6 | 9 | CBL-ASM CXL FSMB/FSMB 177MM YL | 28480 | |
| | 2510-0045 | 8 | 7 | SCREW-MACH 8-32 .375-IN-LG PAN-HD-POZI | 83486 | |
| | 2260-0003 | 7 | 7 | NUT-HEX-PLSTC LKG 4-40-THD .141-IN-THK | 28480 | |
| | 2950-0072 | 3 | 7 | NUT-HEX-DBL-CHAM 1/4-32-THD .062-IN-THK | 12697 | |
| | 4330-0496 | 3 | 7 | INSULATOR-BEAD GLASS | 53101 | KG12 |
| | 2190-0009 | 4 | 6 | WASHER-LK INTL T NO. 8 .168-IN-ID | 73734 | 1333 |
| | 0624-0268 | 6 | 6 | SCREW-TPG 4-24 .375-IN-LG PAN-HD-POZI | 83486 | |
| | 8160-0360 | 3 | 6 | RFI ROUND STRIP STL MSH/SIL RBR SN-PL | 57003 | 02-0101-0053-05 |
| | 2420-0003 | 7 | 6 | NUT-HEX-DBL-CHAM 6-32-THD .094-IN-THK | 70318 | |
| | 2580-0003 | 5 | 6 | NUT-HEX-W/LKWR 8-32-THD .125-IN-THK | 28480 | |
| | 0360-0124 | 3 | 6 | CONNECTOR-SGL CONT PIN .04-IN-BSC-SZ RND97300 | 97300 | |
| | 0624-0097 | 9 | 5 | SCREW-TPG 4-40 .188-IN-LG PAN-HD-POZI | 83486 | |
| | 0370-1005 | 2 | 5 | KNOB-BASE-PTR 3/8 JGK .125-IN-ID | 28480 | 0370-1005 |
| | 8150-4367 | 7 | 5 | JMPR 22GA YEL 75MM 8x8 | 28480 | |
| | 0400-0082 | 8 | 5 | GROMMET-CHAN NCH .09-IN-GRV-WD | 28480 | GSNY-085NA |
| | 0160-0345 | 6 | 5 | CAPACITOR-FDTHRU 1000PF GMV 500V CER | 03746P01 | 54-804-001-X5V-102P |
| | 03585-61601 | 3 | 5 | CBL-ASM CXL FSMB/FSMB 457MM BR | 28480 | |
| | 0410-1206 | 1 | | CRYSTAL-QUARTZ 349.976 KHZ | 00815 | |
| | 1400-0249 | 0 | 5 | CABLE TIE .062-.625-DIA .091-WD NYL | 56501 | TY-23M-8 |
| | 2190-0047 | 0 | 4 | WASHER-LK 82 CTSK EXT T NO. 6 .142-IN-ID73734 | 73734 | |
| | 2190-0057 | 2 | 4 | WASHER-LK INTL T NO. 12 .218-IN-ID | 73734 | |
| | 2190-0068 | 5 | 4 | WASHER-LK INTL T 1/2 IN .505-IN-ID | 73734 | |
| | 3050-0152 | 3 | 4 | WASHER-SHLDR NO. 8 .172-IN-ID .438-IN-OD73734 | 73734 | 1462 |
| | 3050-0599 | 2 | 4 | WASHER-FL MTLC 1/4 IN .257-IN-ID | 86928 | 5710-63-31 |
| | 2360-0220 | 2 | 4 | SCREW-MACH 6-32 2.25-IN-LG PAN-HD-POZI | 83486 | |
| | 2520-0037 | 9 | 4 | SCREW-MACH 8-32 3-IN-LG RD-HD-SLT STL | 73734 | |
| | 0590-0167 | 1 | 4 | NUT-THUMB 6-32-THD BRS | 73734 | 8070-NP (PAK 1M/BAG) |
| | 0400-0009 | 9 | 4 | GROMMET-RND .125-IN-ID .25-IN-GRV-OD | 28480 | G250 |
| | 0180-0291 | 3 | | CAPACITOR-FXD 1UF+-10% 35VDC TA | 13606 | 150D105X9035A2-DYS |
| | 03585-61602 | 4 | 4 | CBL-ASM CXL FSMB/FSMB 76MM RD | 28480 | |
| | 1251-4182 | 1 | 4 | CONNECTOR-SGL CONT SKT .025-IN-BSC-SZ SQ22526 | 22526 | 47565 |
| | 0400-0226 | 2 | 3 | GROMMET-CHAN .052-IN-GRV-WD | 28480 | GRNY-052NA |
| | 2190-0577 | 1 | 3 | WASHER-LK HLCL NO. 10 .194-IN-ID | 73734 | |
| | 2360-0111 | 0 | 3 | SCREW-MACH 6-32 .188-IN-LG PAN-HD-POZI | 83486 | |
| | 2360-0197 | 2 | 3 | SCREW-MACH 6-32 .375-IN-LG PAN-HD-POZI | 83486 | |
| | 2360-0202 | 0 | 3 | SCREW-MACH 6-32 .625-IN-LG 100 DEG | 83486 | |
| | 2360-0205 | 3 | 3 | SCREW-MACH 6-32 .75-IN-LG PAN-HD-POZI | 83486 | |
| | 0361-0229 | 1 | 3 | RVT-STB OVHD .123D .16LG BRSTN | 12014 | R-3472 |
| | 0361-1049 | 5 | 3 | RVT-BLD DMHD .126D .25GRP AL | 19738 | 1601-0412 |
| | 03585-61667 | 1 | 3 | CBL-ASM RGD mSTP/mSTP 18MM CU | 28480 | |
| | 1400-0024 | 9 | 3 | CLAMP-CABLE .25-DIA .5-WD NYL | 09922 | HP-4N |
| | | | 3 | | 28480 | |
| | 1250-0669 | 9 | 3 | ADAPTER-COAX STR M-SMB M-SMB | 98291 | 51-072-0000-226 |
| | 2190-0016 | 3 | 2 | WASHER-LK INTL T 3/8 IN .377-IN-ID | 73734 | |
| | 0360-0042 | 4 | 2 | TERMINAL-SLDR LUG PL-MTG FOR-%6-SCR | 79963 | |
| | 0360-1610 | 4 | 2 | TERMINAL-SLDR LUG PL-MTG FOR-%8-SCR | 79963 | 608.136H |
| | 0360-2328 | 3 | 2 | TML-SDLG % 6 .08HL .48LG BRZTN | 79963 | 947 |
| | 5001-0541 | 3 | 2 | TRIM-FRT FRM SD II+VYNL | 28480 | 5001-0541 |
| | 03585-00310 | 3 | 2 | SHTF CLMP-LG STL | 28480 | 03585-00310 |
| | 03585-00608 | 2 | 2 | SHTF SHLD-VTO MU | 28480 | |
| | 0380-0643 | 3 | 2 | STANDOFF-HEX .255-IN-LG 6-32-THD | 28480 | |
| | 0520-0127 | 6 | 2 | SCREW-MACH 2-56 .188-IN-LG PAN-HD-POZI | 83486 | |
| | 0570-1030 | 7 | 2 | STD-PRS 6-32 .31LG STLZ | 46384 | FH-632-5-ZI |
| | 0624-0100 | 5 | 2 | SCREW-TPG 4-40 .5-IN-LG PAN-HD-POZI STL | 83486 | |
| | 2360-0221 | 3 | 2 | SCREW-MACH 6-32 2.5-IN-LG PAN-HD-POZI | 83486 | |
| | 2360-0316 | 7 | 2 | SCREW-MACH 6-32 .25-IN-LG 100 DEG | 77250 | |
| | 0361-0187 | 0 | 2 | RVT-STB OVHD .123D .38LG BRSTN | 12014 | |
| | 0361-0230 | 4 | 2 | RVT-STB OVHD .123D .19LG BRSTN | 12014 | R-3682 |
| | 0361-0233 | 7 | 2 | RVT-STB OVHD .123D .28LG BRSTN | 12014 | R-3682 |
| | 2950-0043 | 8 | 2 | NUT-HEX-DBL-CHAM 3/8-32-THD .094-IN-THK | 28480 | |
| | 03585-20302 | 5 | 2 | MCHD KNUT-SHLDR | 07801P01 | |
| | 8150-4279 | 0 | 2 | JMPR 22GA BLK 100MM 8x8 | 28480 | |
| | 8150-4299 | 4 | 2 | JMPR 22GA BRN 75MM 8x8 | 28480 | |
| | 0340-0618 | 8 | 2 | INSULATOR MYL/VNL | 03211D01 | |
| | 1250-0102 | 5 | 2 | CONNECTOR-RF BNC FEM SGL-HOLE-FR 50-OHM | 24931 | 28JS109-1 |

See introduction to this section for ordering information
* Indicates one of several possible values installed

# Table 9-3. Replaceable Parts

| Reference Designation | HP Part Number | C D | Qty. | Description | Mfr. Code | Mfr. Part Number |
|---|---|---|---|---|---|---|
| | 1251-3982 | 7 | 2 | CONN-UTIL P-%-SKT 2-CKT | 27264 | 03-06-1023 |
| | 7204-0017 | 0 | 1 | SHT-AL 2.0MM/.080TK AA5052- | 28480 | 7204-0017 |
| | 03585-67904 | 1 | 1 | WIRE FORM-RF | 28480 | |
| | 2190-0007 | 2 | 1 | WASHER-LK INTL T NO. 6 .141-IN-ID | 73734 | |
| | 3050-0067 | 9 | 1 | WASHER-FL MTLC 5/16 IN .375-IN-ID | 73734 | 31-550 |
| | 3050-0071 | 5 | 1 | WASHER-FL MTLC NO. 8 .169-IN-ID | 73734 | |
| | 0360-0368 | 7 | 1 | TERMINAL-SLDR LUG LK-MTG FOR-%12-SCR | 73734 | |
| | 0360-1666 | 0 | 1 | TERMINAL STRIP 5-TERM PHEN 1.89-IN-L | 05545P01 | |
| | 0510-0004 | 7 | 1 | THREADED INSERT-NUT 8-32 .094-IN-LG STL | 46384 | S-832-2 |
| | 0590-0343 | 5 | 1 | THREADED INSERT-NUT 4-40 .062-IN-LG | 46384 | S-440-2-ZI |
| | 0890-0006 | 3 | 1 | TUBING-FLEX .204-ID PVC .02-WALL | 12509 | INSUL 105 |
| | 0890-0023 | 4 | 1 | TUBING-FLEX .144-ID PVC .02-WALL | 12509 | ITCO 105 DEG C |
| | 9100-4060 | 3 | 1 | TRANSFORMER-POWER 86-127 VAC; 48-440 HZ | 02081P01 | |
| | 03582-60103 | 5 | 1 | SHTF ASSY-CRT SHLD MU | 28480 | |
| | 03585-00101 | 0 | 1 | SHTF DECK-HVPS AL | 28480 | 03585-00101 |
| | 03585-00105 | 4 | 1 | SHTF MTG-HVPS DECK AL | 28480 | 03585-00105 |
| | 03585-00213 | 5 | 1 | SHTF PNL-REAR ALSK | 28480 | 03585-00213 |
| | 03585-00222 | 6 | 1 | SHTF PNL-FRT SUB AL | 28480 | 03585-00222 |
| | 03585-00302 | 3 | 1 | SHTF CVR-INP AL | 28480 | 03585-00302 |
| | 03585-00307 | 8 | 1 | SHTF SHLD-FRT MU | 28480 | |
| | 03585-00308 | 9 | 1 | SHTF SHLD-REAR MU | 28480 | |
| | 03585-00311 | 4 | 1 | SHTF CLMP-END STL | 28480 | 03585-00311 |
| | 03585-00316 | 9 | 1 | SHTF CVR-LO BOX MUSK | 28480 | 03585-00316 |
| | 03585-00601 | 5 | 1 | SHTF DVDR-DIGITAL AL | 28480 | 03585-00601 |
| | 03585-01201 | 3 | 1 | SHTF BRKT-B AL | 28480 | 03585-01201 |
| | 03585-01203 | 5 | 1 | SHTF BRKT-PC BD AL | 28480 | 03585-01203 |
| | 03585-01205 | 7 | 1 | SHTF CLMP-CRT SHLD STL | 28480 | 03585-01205 |
| | 03585-01206 | 8 | 1 | SHTF BRKT-C1 % C2 CAP AL | 28480 | 03585-01206 |
| | 03585-01211 | 5 | 1 | SHTF BRKT-T AL | 28480 | 03585-01211 |
| | 03585-01213 | 7 | 1 | SHTF BRKT-T MOUNT AL | 28480 | 03585-01213 |
| | 03585-01215 | 9 | 1 | SHTF BRKT-LN FLTR AL | 28480 | 03585-01215 |
| | 03585-01219 | 3 | 1 | SHTF BRKT-BAR AL | 28480 | 03585-01219 |
| | 03585-01222 | 8 | 1 | SHTF BRKT-CRT BZL AL | 28480 | 03585-01222 |
| | 03585-01227 | 3 | 1 | SHTF BRKT-RR CVR AL | 28480 | 03585-01227 |
| | 03585-01230 | 8 | 1 | SHTF BRKT-CONN AL | 28480 | 03585-01230 |
| | 03585-01231 | 9 | 1 | SHTF PNL-CTR SPRT AL | 28480 | 03585-01231 |
| | 03585-04101 | 8 | 1 | SHTF CVR-HVPS AL | 28480 | 03585-04101 |
| | 03585-04106 | 3 | 1 | SHTF BRKT-LO MTG AL | 28480 | 03585-04106 |
| | 03585-04112 | 1 | 1 | SHTF CVR-67 PLCR | 28480 | 03585-04112 |
| | 03585-04113 | 2 | 1 | SHTF CVR-67B PLCR | 28480 | 03585-04113 |
| | 03585-04114 | 3 | 1 | SHTF CVR-REAR FRM PLCR | 28480 | 03585-04114 |
| | 03585-04115 | 4 | 1 | SHTF CVR-PWR SPLY PLCR | 28480 | 03585-04115 |
| | 03585-04116 | 5 | 1 | SHTF CVR-FRT IF ALSK | 28480 | 03585-04116 |
| | 03585-04117 | 6 | 1 | SHTF CVR-21 ALSK | 28480 | 03585-04117 |
| | 03585-04121 | 2 | 1 | SHTF CVR-PLENUM PLCR | 28480 | 03585-04121 |
| | 03585-04123 | 4 | 1 | SHTF CVR-RR IF ALSK | 28480 | 03585-04123 |
| | 03585-04130 | 3 | 1 | SHTF NSLTR-HVPS PLCR | 28480 | 03585-04130 |
| | 03585-04141 | 6 | 1 | SHTF CVR-RR PNL ALSK | 28480 | 03585-04141 |
| | 03585-19401 | 2 | 1 | SFTW-DISC PRGM 3585B PERF TEST | 1EX28 | |
| | 03585-60202 | 8 | 1 | SHTF ASSY-RT SD AL | 28480 | 03585-60202 |
| | 03585-60204 | 0 | 1 | SHTF ASSY-IF SEC AL | 28480 | 03585-60204 |
| | 03585-60221 | 1 | 1 | SHTF ASSY-LT SD AL | 28480 | 03585-60221 |
| | 03585-60301 | 8 | 1 | SHTF ASSY-CVR MU | 28480 | |
| | 03585-90007 | 4 | 1 | SERVICE MANUAL | 28480 | 03585-90007 |
| | 0380-1915 | 4 | 1 | SPCR-RD .14ID.31D .12LG NYLNA | 13764 | 13SP092 |
| | 1400-0093 | 2 | 1 | STRAP-CABLE .438-DIA POLYETH | 01924P01 | 220-250471-00 |
| | 1400-0118 | 2 | 1 | STRAP-CABLE .625-DIA POLYETH | 01924P01 | 220-254101-00 |
| | 2200-0109 | 8 | 1 | SCREW-MACH 4-40 .438-IN-LG PAN-HD-POZI | 83486 | |
| | 2510-0115 | 3 | 1 | SCREW-MACH 8-32 1-IN-LG PAN-HD-POZI | 83486 | |
| | 3101-2299 | 2 | 1 | SWITCH-SL DPDT STD 5A 250VAC SLDR-LUG | D8351 | 4021.0512 |
| | 3101-3008 | 3 | 1 | SW-RKR | 09328P01 | WI 32/177 |
| | 5062-3736 | 2 | 1 | SHTF CVR-TOP II+ALV | 28480 | 5062-3736 |
| | 5062-3748 | 6 | 1 | SHTF CVR-BTTM II+ALV | 28480 | 5062-3748 |
| | 7121-5165 | 3 | 1 | SFTW-LBL BLNK 3.50" | 28480 | 7121-5165 |
| | 0960-0684 | 2 | 1 | RPG QDES-8831 | 28480 | 0960-0684 |

See introduction to this section for ordering information
* Indicates one of several possible values installed

# Table 9-3. Replaceable Parts

| Reference Designation | HP Part Number | C D | Qty. | Description | Mfr. Code | Mfr. Part Number |
|---|---|---|---|---|---|---|
| | 2100-3189 | 8 | 1 | RESISTOR-VAR CONTROL CCP 50K 20% LIN | 01121 | W |
| | 2100-3705 | 4 | 1 | RESISTOR-VAR W/SW 10K 10% LIN DPST-NO-NC01121 | 01121 | 70L1N048R103W/1001 SWITCH |
| | 2100-3718 | 9 | 1 | RESISTOR-VAR CONTROL CP 5K 10% LIN | 12697 | 381X |
| | 03585-00211 | 3 | 1 | PNL-FRT TOP "3585B" II+ALLM | 03211D01 | 03585-00211 |
| | 03585-43001 | 9 | 1 | PNL-OVRLY BTTM "3585B" II+PLCR | 03211D01 | 03585-43001 |
| | 5040-6973 | 9 | 1 | PKG-COVER,FRONT PLASTIC | 28480 | |
| | 5060-0467 | 6 | 1 | PLST CONNECTOR PROBE | 28480 | 5060-0467 |
| | 9211-3323 | 4 | 1 | PKG-CTN RSC 350D32.4x24.4x17.8 | 27463 | |
| | 5061-8008 | 9 | 1 | OPT RPG DSC RPG/FHSG 100MM ML | 28480 | 5061-8008 |
| | 0590-0060 | 3 | 1 | NUT-HEX-DBL-CHAM 12-32-THD .078-IN-THK | 03746P01 | |
| | 2110-0786 | 6 | 1 | NUT-HX M12.7X1.5 DBLTHD BRSNI | H9027 | 098.0026 |
| | 03582-22701 | 9 | 1 | MCHD LNZ-CRT FILTER:82A % 85A | L1851P01 | |
| | 03585-21203 | 7 | 1 | MCHD BAR-ANALOG MTG | 28480 | 03585-21203 |
| | 03585-21207 | 1 | 1 | MCHD BAR-INP MTG | 28480 | 03585-21207 |
| | 03585-21210 | 6 | 1 | MCHD BAR SUPPORT | 28480 | 03585-21210 |
| | 03585-21211 | 7 | 1 | MCHD BAR PS CLAMP | 28480 | 03585-21211 |
| | 03585-21212 | 8 | 1 | MCHD BAR-INP SPRT | 28480 | 03585-21212 |
| | 03585-21214 | 0 | 1 | MCHD CLAMP-P.S. | 28480 | 03585-21214 |
| | 03585-21215 | 1 | 1 | MCHD STDF-RF M3.5 BRST | 28480 | |
| | 03585-21224 | 2 | 1 | MCHD BRD CLMP AL | L1851P01 | 03585-21224 |
| | 03585-21229 | 7 | 1 | MCHD XTRS-FRT LWR | L1851P01 | 03585-21229 |
| | 03585-60205 | 1 | 1 | MCHD TRK GEN ASSY | 28480 | 03585-60205 |
| | 03585-60217 | 5 | 1 | MCHD CARDNEST-LO BOX | 07801P01 | |
| | 03585-90004 | 1 | 1 | MANL-OPERATING | 28480 | 03585-90004 |
| | 5041-0319 | 7 | 19 | MOLD KEY BLK W/LIGHT | 28480 | 5041-0319 |
| | 5041-0352 | 8 | 5 | MOLD KEY BLK W/LIGHT | 28480 | 5041-0352 |
| | 5041-2912 | 0 | 2 | MOLD KCAP ARO UP/DN | 28480 | 5041-2912 |
| | 01650-47401 | 7 | 1 | MOLD RPG KNOB | 28480 | |
| | 03582-06701 | 5 | 1 | MOLD GASKET - CRT | 28480 | |
| | 5040-7783 | 1 | 1 | MOLD SUPPORT-CRT SH | 28480 | |
| | 5041-0093 | 4 | 1 | MOLD KCAP-PLOT | 28480 | 5041-0093 |
| | 5041-0095 | 6 | 1 | MOLD KCAP-SAVE | 28480 | 5041-0095 |
| | 5041-0310 | 8 | 1 | MOLD KEY BLANK | 28480 | 5041-0310 |
| | 5041-0451 | 8 | 1 | MOLD KCAP-BLUEPIPE | 28480 | 5041-0451 |
| | 5041-0531 | 5 | 1 | MOLD KCAP-UNL S.W. | 28480 | 5041-0531 |
| | 5041-0720 | 4 | 1 | MOLD KEY INSTR PRESET | 28480 | 5041-0720 |
| | 5041-0739 | 5 | 1 | MOLD KEY MHZ DBM V | 28480 | 5041-0739 |
| | 5041-0740 | 8 | 1 | MOLD KEY KHZ DBV MV | 28480 | 5041-0740 |
| | 5041-0741 | 9 | 1 | MOLD KEY HZ DB UV | 28480 | 5041-0741 |
| | 5041-0742 | 0 | 1 | MOLD KEY SEC | 28480 | 5041-0742 |
| | 5041-0772 | 6 | 1 | MOLD KEY LOCAL | 28480 | 5041-0772 |
| | 5041-0773 | 7 | 1 | MOLD KEY FULL SWEEP | 28480 | 5041-0773 |
| | 5041-0775 | 9 | 1 | MOLD KCAP RECALL | 28480 | 5041-0775 |
| | 5041-0776 | 0 | 1 | MOLD KEY CLEAR | 28480 | 5041-0776 |
| | 5041-0780 | 6 | 1 | MOLD KEY OFF | 28480 | 5041-0780 |
| | 5041-0923 | 9 | 1 | MOLD SAVE(OFF) | 28480 | 5041-0923 |
| | 5041-0924 | 0 | 1 | MOLD RECALL(ON) | 28480 | 5041-0924 |
| | 5041-0939 | 7 | 1 | MOLD KEY STORE A-B | 28480 | 5041-0939 |
| | 5041-0940 | 0 | 1 | MOLD KEY CLEAR A | 28480 | 5041-0940 |
| | 5041-1612 | 5 | 1 | MOLD KEY START FREQ | 28480 | 5041-1612 |
| | 5041-1613 | 6 | 1 | MOLD KEY STOP FREQ | 28480 | 5041-1613 |
| | 5041-2727 | 5 | 1 | MOLD KEY SWEEPTIME | 28480 | 5041-2727 |
| | 5041-2910 | 8 | 1 | MOLD KCAP - | 28480 | 5041-2910 |
| | 5041-2911 | 9 | 1 | MOLD KCAP . | 28480 | 5041-2911 |
| | 5041-2913 | 1 | 1 | MOLD KCAP 1 | 28480 | 5041-2913 |
| | 5041-2914 | 2 | 1 | MOLD KCAP 2 | 28480 | 5041-2914 |
| | 5041-2915 | 3 | 1 | MOLD KCAP 3 | 28480 | 5041-2915 |
| | 5041-2916 | 4 | 1 | MOLD KCAP 4 | 28480 | 5041-2916 |
| | 5041-2917 | 5 | 1 | MOLD KCAP 5 | 28480 | 5041-2917 |
| | 5041-2918 | 6 | 2 | MOLD KCAP 6 | 28480 | 5041-2918 |
| | 5041-2918 | 6 | | MOLD KCAP 6 | 28480 | 5041-2918 |
| | 5041-2919 | 7 | 1 | MOLD KCAP 7 | 28480 | 5041-2919 |
| | 5041-2920 | 0 | 1 | MOLD KCAP 8 | 28480 | 5041-2920 |
| | 5041-2922 | 2 | 1 | MOLD KCAP 0 | 28480 | 5041-2922 |
| | 5041-3071 | 4 | 1 | MOLD RETAINER-CONN | 28480 | 5041-3071 |

See introduction to this section for ordering information
* Indicates one of several possible values installed

# Table 9-3. Replaceable Parts

| Reference Designation | HP Part Number | C D | Qty. | Description | Mfr. Code | Mfr. Part Number |
|---|---|---|---|---|---|---|
| | 5041-4726 | 8 | 1 | MOLD KEY PEAK SEARCH | 28480 | 5041-4726 |
| | 5041-4727 | 9 | 1 | MOLD KEY PLOT MARKER | 28480 | 5041-4727 |
| | 5041-4728 | 0 | 1 | MOLD KEY NEXT PEAK | 28480 | 5041-4728 |
| | 5041-4729 | 1 | 1 | MOLD KEY PLOT SETUP | 28480 | 5041-4729 |
| | 5041-4731 | 5 | 1 | MOLD KEY ENTER OFFSET | 28480 | 5041-4731 |
| | 5041-4732 | 6 | 1 | MOLD KEY MARKER CENTER FREQ | 28480 | 5041-4732 |
| | 5041-4733 | 7 | 1 | MOLD KEY MKR REF LEVEL | 28480 | 5041-4733 |
| | 5041-4734 | 8 | 1 | MOLD KEY OFFSET SPAN | 28480 | 5041-4734 |
| | 5041-4735 | 9 | 1 | MOLD KEY VIDEO BW | 28480 | 5041-4735 |
| | 5041-4736 | 0 | 1 | MOLD KEY RANGE | 28480 | 5041-4736 |
| | 5041-4737 | 1 | 1 | MOLD KEY MANUAL | 28480 | 5041-4737 |
| | 5041-4738 | 2 | 1 | MOLD KEY RES B W | 28480 | 5041-4738 |
| | 5041-4739 | 3 | 1 | MOLD KEY CENTER FREQUENCY | 28480 | 5041-4739 |
| | 5041-4740 | 6 | 1 | MOLD KEY FREQ SPAN | 28480 | 5041-4740 |
| | 5041-4741 | 7 | 1 | MOLD KEY REF LEVEL | 28480 | 5041-4741 |
| | 5041-4742 | 8 | 1 | MOLD KEY DB/DIV | 28480 | 5041-4742 |
| | 5041-4743 | 9 | 1 | MOLD KEY REF LEV VOLT | 28480 | 5041-4743 |
| | 5041-4744 | 0 | 1 | MOLD KEY CF STEP SIZE | 28480 | 5041-4744 |
| | 7120-3416 | 1 | 1 | LABEL-WARNING 1.25-IN-WD 2.75-IN-LG | 28480 | |
| | 7120-3528 | 6 | 1 | LABEL-WARNING .6-IN-WD 1.8-IN-LG VINYL | 03211D01 | |
| | 7120-3530 | 0 | 1 | LABEL-WARNING .6-IN-WD 1.5-IN-LG VINYL | 03211D01 | |
| | 7120-6957 | 1 | 1 | LABEL-INFORMATION .5-IN-WD 1.75-IN-LG | 03211D01 | |
| | 7121-0270 | 1 | 1 | LABEL-INFORMATION .5-IN-WD 1-IN-LG MYLAR03211D01 | 03211D01 | |
| | 7121-1964 | 2 | 1 | LABEL-INFORMATION .75-IN-WD 2-IN-LG | 03211D01 | |
| | 7121-1965 | 3 | 1 | LABEL-INFORMATION .75-IN-WD 2-IN-LG | 03211D01 | |
| | 7121-2527 | 5 | 1 | LBL-WRNG "CAUTION METRIC % | 03211D01 | |
| | 7121-2921 | 3 | 1 | LBL-INFO "BW/83/80/RO THE X-RA | 03211D01 | |
| | 7121-4611 | 2 | 1 | LABEL-INFORMATION .15-IN-WD .6-IN-LG | 28480 | L01003 |
| | 7124-2083 | 4 | 1 | LABEL-WARNING 1-IN-WD 3.5-IN-LG PPR | 28480 | |
| | 8120-3934 | 9 | 1 | LJPR 22GA BLU 350MM DxD | 28480 | |
| | 8120-4443 | 7 | 1 | LJPR 22GA YEL 150MM 8x8 | 28480 | |
| | 8120-4552 | 9 | 1 | LJPR 22GA GRN 350MM Dx8 | 28480 | |
| | 8150-4289 | 2 | 1 | JMPR 22GA BLK 175MM 8x8 | 28480 | |
| | 8150-4321 | 3 | | JMPR 22GA RED 75MM 8x8 | 28480 | |
| | 8150-4325 | 7 | | JMPR 22GA RED 100MM 8x8 | 28480 | |
| | 8150-4370 | 2 | 1 | JMPR 22GA YEL 100MM 8x8 | 28480 | |
| | 8150-4383 | 7 | 1 | JMPR 22GA YEL 300MM 8x8 | 28480 | |
| | 8150-4394 | 0 | | JMPR 22GA GRN 75MM 8x8 | 28480 | |
| | 8150-4419 | 0 | | JMPR 22GA BLU 75MM 8x8 | 28480 | |
| | 8150-4452 | 1 | 1 | JMPR 22GA VIO 150MM 8x8 | 28480 | |
| | 8150-4485 | 0 | 1 | JMPR 22GA GRA 500MM 8x8 | 28480 | |
| | 8150-4492 | 9 | | JMPR 22GA WHT 75MM 8x8 | 28480 | |
| | 8150-4526 | 0 | 1 | JMPR 22GA WHTREDGRA 500MM 8x8 | 28480 | |
| | 8150-4532 | 8 | 1 | JMPR 22GA WHTYELGRA 450MM 8x8 | 28480 | |
| | 8150-4537 | 3 | 1 | JMPR 22GA WHTGRNGRA 450MM 8x8 | 28480 | |
| | 8150-4555 | 5 | 1 | JMPR 18GA GRNYEL 75MM 8x8 | 28480 | |
| | 8150-4565 | 7 | 1 | JMPR 18GA WHTBLKGRA 100MM 8x8 | 28480 | |
| | 01332-66001 | 8 | 1 | INC WIREWND HIV TRACE ALIGN | 28480 | 01332-66001 |
| | 01701-66001 | 5 | 1 | INC WIREWND HIV TRACE ALIGN | 28480 | 01701-66001 |
| | 0340-0564 | 3 | 1 | INSULATOR-XSTR THRM-CNDCT | 55285 | 7403-09FR-51 |
| | 0340-1012 | 8 | 1 | INSULATOR-FLG-BSHG NYLON | 02267D01 | |
| | 1820-0430 | 1 | 1 | IC V RGLTR-FXD-POS 4.8/5.2V TO-3 PKG | 27014 | |
| | 1826-0402 | 9 | 1 | IC V RGLTR-FXD-POS 14.2/15.8V TO-3 PKG | 06545P01 | |
| | 03585-64201 | 5 | 1 | HSG-H.V.P.S | 28480 | 03585-64201 |
| | 0905-0394 | 5 | 1 | GSKT SEAL .10W | 51633 | |
| | 0905-0573 | 2 | 1 | GASKET RND NPRN-FM 1-IN-THK 2.9-IN-OD | 78471 | |
| | 03585-68501 | 6 | 1 | FAN-ASSY 106CFM 12VDC 4.7x1.5 | L1135P01 | |
| | 1400-0090 | 9 | 1 | FUSEHOLDER COMPONENT FOR USE ON | 75915 | 901-002 |
| | 2110-0003 | 0 | 1 | FUSE 3A 250V NTD 1.25X.25 UL | 75915 | 312 003 |
| | 2110-0564 | 8 | 1 | FUSEHOLDER BODY 12A MAX FOR UL | H9027 | 031.1657 |
| | 2110-0565 | 9 | 1 | FUSEHOLDER CAP 12A MAX FOR UL | H9027 | 031.1666 |
| | 3150-0218 | 4 | 1 | FILTER-AIR 32 STD MESH MET sCREEN | 28480 | LZ60 |
| | 3160-0562 | 2 | 1 | FAN-GUARD | 10938P01 | 08128 |
| | 9100-3939 | 3 | 1 | FILTER-LINE LUGS-TERMS | 05245 | 6EF2 |
| | 0361-0014 | 2 | 1 | EYLT-RLD FLG .013T MATL BRSNI | 28480 | 0361-0014 |

See introduction to this section for ordering information
* Indicates one of several possible values installed

# Table 9-3. Replaceable Parts

| Reference Designation | HP Part Number | C D | Qty. | Description | Mfr. Code | Mfr. Part Number |
|---|---|---|---|---|---|---|
| | 5060-5964 | 8 | 1 | EXTN BD-A6 | 28480 | 5060-5964 |
| | 1901-0526 | 8 | 1 | DIODE-FW BRDG 100V 5A | 27777 | |
| | 1906-0211 | 8 | 1 | DIODE-ARRAY VF DIFF=20MV | 28480 | 1906-0211 |
| | 1906-0212 | 9 | 1 | DIODE-FW BRDG 400V 35A | 04713 | |
| | 0160-4603 | 7 | 1 | CAPACITOR-FXD 1UF +-20% 200VDC MET-POLYP15766 | 15766 | HEW-363 |
| | 0160-6507 | 4 | 1 | C-F 1000PF 20% 100V CERMLr | 28480 | RPE121-978X7R102M100V |
| | 0160-6517 | 6 | 1 | C-F 100PF 20% 200V CERMLr | 28480 | RPE121-978X7R101M200V |
| | 03585-42002 | 8 | 1 | CSTG-HSNG INPUT AL | OBV87 | |
| W23 | 03585-61605 | 7 | 1 | CBL-ASM CXL FSMB/FSMB 330MM GN | 28480 | |
| W24 | 03585-61606 | 8 | 1 | CBL-ASM CXL FSMB/FSMB 406MM BL | 28480 | |
| W25 | 03585-61607 | 9 | 1 | CBL-ASM CXL FSMB/FSMB 457MM VI | 28480 | |
| W26 | 03585-61608 | 0 | 1 | CBL-ASM CXL FSMB/FBNC 450MM RD | 28480 | |
| W27 | 03585-61609 | 1 | 1 | CBL-ASM CXL FSMB/FBNC 889MM VI | 28480 | |
| W28 | 03585-61610 | 4 | 1 | CBL-ASM CXL FSMB/FSMB 965MM GY | 28480 | |
| W29 | 03585-61611 | 5 | 1 | CBL-ASM CXL FSMB/FBNC 730MM GY | 28480 | |
| W30 | 03585-61612 | 6 | 1 | CBL-ASM CXL FSMB/FBNC 762MM GY | 28480 | |
| W31 | 03585-61613 | 7 | 1 | CBL-ASM CXL FSMB/FBNC 762MM GN | 28480 | |
| W32 | 03585-61614 | 8 | 1 | CBL-ASM CXL FSMB/FBNC 863MM WH | 28480 | |
| W33 | 03585-61615 | 9 | 1 | CBL-ASM CXL FSMB/FBNC 863MM BK | 28480 | |
| | 03585-61616 | 0 | 1 | CBL-ASM CXL FSMB/MBNC 910MM BR | 28480 | |
| W34 | 03585-61617 | 1 | 1 | CBL-ASM CXL FSMB/FSMB 838MM OR | 28480 | |
| W38 | 03585-61623 | 9 | 1 | CBL-ASM CXL FHSG/FBNC 406MM OR | 28480 | |
| W39 | 03585-61624 | 0 | 1 | CBL-ASM CXL FHSG/FBNC 406MM GN | 28480 | |
| W40 | 03585-61625 | 1 | 1 | CBL-ASM CXL FHSG/FBNC 406MM BL | 28480 | |
| W41 | 03585-61626 | 2 | 1 | CBL-ASM CXL FHSG/FHSG 432MM WH | 28480 | |
| W42 | 03585-61627 | 3 | 1 | CBL-ASM CXL FHSG/FHSG 356MM GY | 28480 | |
| W43 | 03585-61628 | 4 | 1 | CBL-ASM CXL FHSG/FHSG 356MM BK | 28480 | |
| W45 | 03585-61631 | 9 | 1 | CBL-ASM RBN fHDR/fEDG 610MM BL | 28480 | |
| W46 | 03585-61632 | 0 | 1 | CBL-ASM RBN fEDG/fEDG 406MM BL | 28480 | |
| W47 | 03585-61634 | 2 | 1 | CBL-ASM DSC fHSG/fHSG 254MM ML | 28480 | |
| W48 | 03585-61635 | 3 | 1 | CBL-ASM DSC fHSG/fEDG 305MM ML | 28480 | |
| W49 | 03585-61636 | 4 | 1 | CBL-ASM DSC fHSG/fHSG 305MM ML | 28480 | |
| W50 | 03585-61637 | 5 | 1 | CBL-ASM DSC fCRP/fCRP 305MM YG | 28480 | |
| W51 | 03585-61638 | 6 | 1 | CBL-ASM DSC fCRP/fCRP 305MM WO | 28480 | |
| W52 | 03585-61639 | 7 | 1 | CBL-ASM DSC fHSG/fHSG 203MM ML | 28480 | |
| W53 | 03585-61640 | 0 | 1 | CBL-ASM DSC fHSG/mSTP 305MM VO | 28480 | |
| W54 | 03585-61641 | 1 | 1 | CBL-ASM DSC fEDG/fHSG 610MM ML | 28480 | |
| W55 | 03585-61642 | 2 | 1 | CBL-ASM DSC fHSG/mSTP 406MM ML | 28480 | |
| W56 | 03585-61643 | 3 | 1 | CBL-ASM DSC fHSG/mSTP 762MM ML | 28480 | |
| W57 | 03585-61644 | 4 | 1 | CBL-ASM DSC fHSG/fHSG 559MM ML | 28480 | |
| W58 | 03585-61646 | 6 | 1 | CBL-ASM DSC mHSG/ R-V 133MM BW | 28480 | |
| W61 | 03585-61649 | 9 | 1 | CBL-ASM DSC FHSG/FHSG 508MM ML | 28480 | |
| W62 | 03585-61650 | 2 | 1 | CBL-ASM DSC FHSG/FHSG 735MM ML | 28480 | |
| W64 | 03585-61652 | 4 | 1 | CBL-ASM DSC fHSG/mSTP 254MM ML | 28480 | |
| W65 | 03585-61653 | 5 | 1 | CBL-ASM DSC FHSG/mSTP 203MM ML | 28480 | |
| | 03585-61665 | 9 | 1 | CBL-ASM SHL SWT/ STP 82MM GY | 28480 | 03585-61665 |
| | 03585-61668 | 2 | 1 | CBL-ASM DSC mSTP/mSTP 457MM ML | 28480 | |
| | 03585-61673 | 9 | 1 | CBL-ASM RBN HDR/ HDR 58MM GY | 28480 | 03585-61673 |
| | 03585-61674 | 0 | 1 | CBL-ASM RBN HDR/ HDR 127MM GY | 28480 | 03585-61674 |
| | 03585-61675 | 1 | 1 | CBL-ASM RBN HPB/MDIP 139MM GY | 28480 | 03585-61675 |
| | 1251-2410 | 4 | 1 | CONTACT-CONN U/W-UTIL MALE CRP | 27264 | 02-06-2101 |
| | 1251-5043 | 5 | 1 | CONN-POST TYPE .100-PIN-SPCG CRP | 22526 | 65039-032 |
| | 1400-0015 | 8 | 1 | CLAMP-CABLE .25-DIA .375-WD STL | 73734 | 1550 |
| | 1400-0031 | 8 | 1 | CLAMP-CABLE .375-DIA .5-WD NYL | 28480 | W6NY-375NA |
| | 1400-0482 | 3 | 1 | CABLE TIE .062-3-DIA .14-WD NYL | 56501 | TY-26M-8 |
| | 1400-1122 | 0 | 1 | CLAMP-CABLE .187-DIA .735-WD NYL | 34785 | 021-0188 |
| | 5021-8407 | 8 | 1 | CSTG-FRAME-FRONT II+ | 28480 | 5021-8407 |
| | 5083-6589 | 3 | 1 | CRT 6" VECTOR GRN 10X10 GRAT | 28480 | 5083-6589 |
| | 03585-89901 | 4 | 1 | Semi-Auto Performance Test Manual | 28480 | 03585-89901 |
| | 1250-1499 | 5 | 1 | ADAPTER-COAX RTANG M-BNC F-BNC | 98291 | 58-905-0019-910 |

See introduction to this section for ordering information
* Indicates one of several possible values installed

| Designator | Qty | Part Number | Description |
|---|---|---|---|
| 1 | 1 | 5020-8808 | FRAME, REAR |
| 2 | 2 | 5062-3823 | COVER, SIDE |
| 3 | 4 | 5021-5838 | RAILS, SIDE |
| 4 | 1 | 5062-3748 | COVER, BOTTOM |
| 5 | 4 | 5041-8801 | FOOT, FLASTIC |
| 6 | | 5001-0541 | TRIM, SIDE |
| 7 | 1 | 5020-8807 | FRAME, FRONT |
| 8 | 1 | 5041-5818 | BEZEL, CRT |
| 9 | 1 | 03582-60103 | SHIELD, CRT |
| 10 | 1 | 5041-8802 | TRIM, TOP |
| 11 | 1 | 5062-3736 | COVER, TOP |
| 12 | | 03585-01222 | CRT BRACKET |
| 13 | | 0361-1049 | RIVET, CRT BRKT |
| 14 | | 03582-06701 | GASKET, CRT |
| 15 | | 5041-0041 | SCREWS, SIDE STRUT |
| 16 | | 0515-0889 | SCREWS (CRT/BEZEL) |
| 17 | | 5054-5833 | BEZEL FRAME |
| 18 | | 03582-22701 | FILTER-GRAY, CRT |

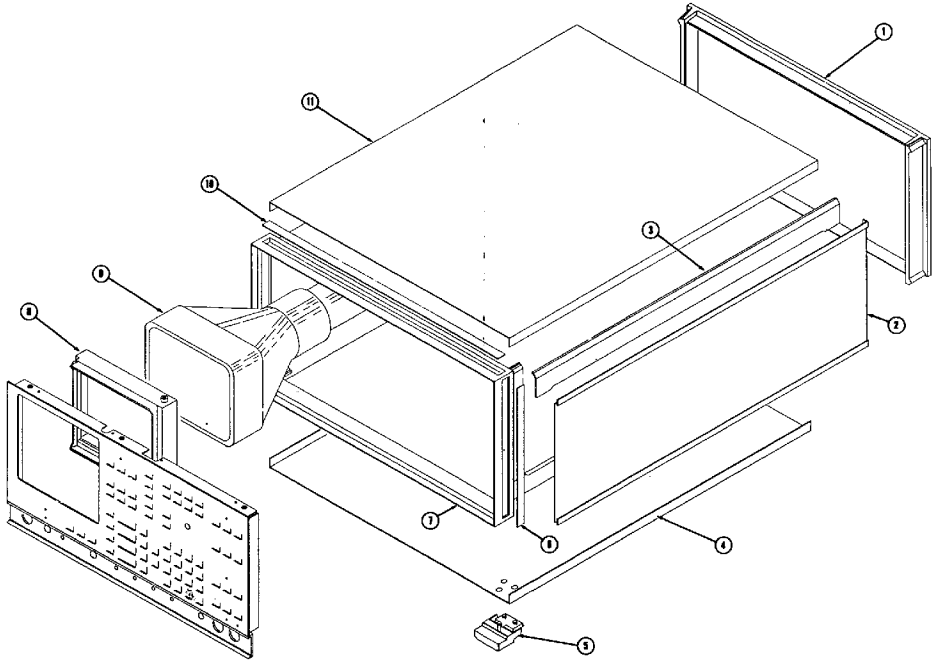


**Figure 9-1. External Covers**

| Designator | Part Number | Description |
|---|---|---|
| 1 | 03585-00222 | Sub-panel, Front |
| 2 | 03585-00211 | Panel, Front |
| 3 | 3050-0067 | Washer-flat |
| 4 | 2950-0043 | Nut-hex |
| 5 | 5061-8008 | Knob |
| 6 | 2950-0043 | Nut-hex |
| 7 | 2190-0016 | Washer-lock |
| 8 | 03585-21229 | Extr-frt pnl-lwr |
| 9 | 03585-43001 | Insert-front panel |
| 10 | 5060-0467 | Connector, male probe |
| 11 | 0370-1005 | Knob-base |
| 12 | 2950-0072 | Nut-hex |
| 13 | 3050-0599 | Washer-flat |
| 14 | 1250-0102 | Connector-RF, BNC female |
| 15 | 3101-3008 | Switch-toggle |
| 16 | 2190-0068 | Washer-lock |
| 17 | 2950-0054 | Nut-hex |
| 18 | 2100-3718 | Resistor-variable |
| 19 | 2950-0072 | Nut-hex |
| 20 | 2190-0060 | Washer-lock |
| 21 | 2100-3705 | Potentiometer (10K) |
| 22 | 03585-61646 | Cbl-assy, focus |
| 23 | 2100-3189 | Resistor-var (50k) |
| 23a | 2100-2838 | Resistor-var (20k) |
| 24 | 7121-4963 | Logo |
| 25 | 2360-0113 | Screw |
| 26 | 2580-0003 | Nut |
| 27 | 5061-8008 | Potentiometer, RPG |
| 28 | 2190-0016 | Washer-lock |
| 29 | 03585-66587 | Keyboard assy. |
| | 03585-61650 | Cbl-assy, int/astig/grat/A67 |
| | 0890-0025 | Spiral wrap tubing |
| | 03585-61643 | Cbl-assy, probe power |
| | 03585-61611 | Cbl-assy-gray, ext. trigger |
| | 03585-61608 | Cbl-assy-red, tracking gen. |
| | 03585-61631 | Ribbon cable |

*Refer to Table 9-3 for Keycap Part Numbers*

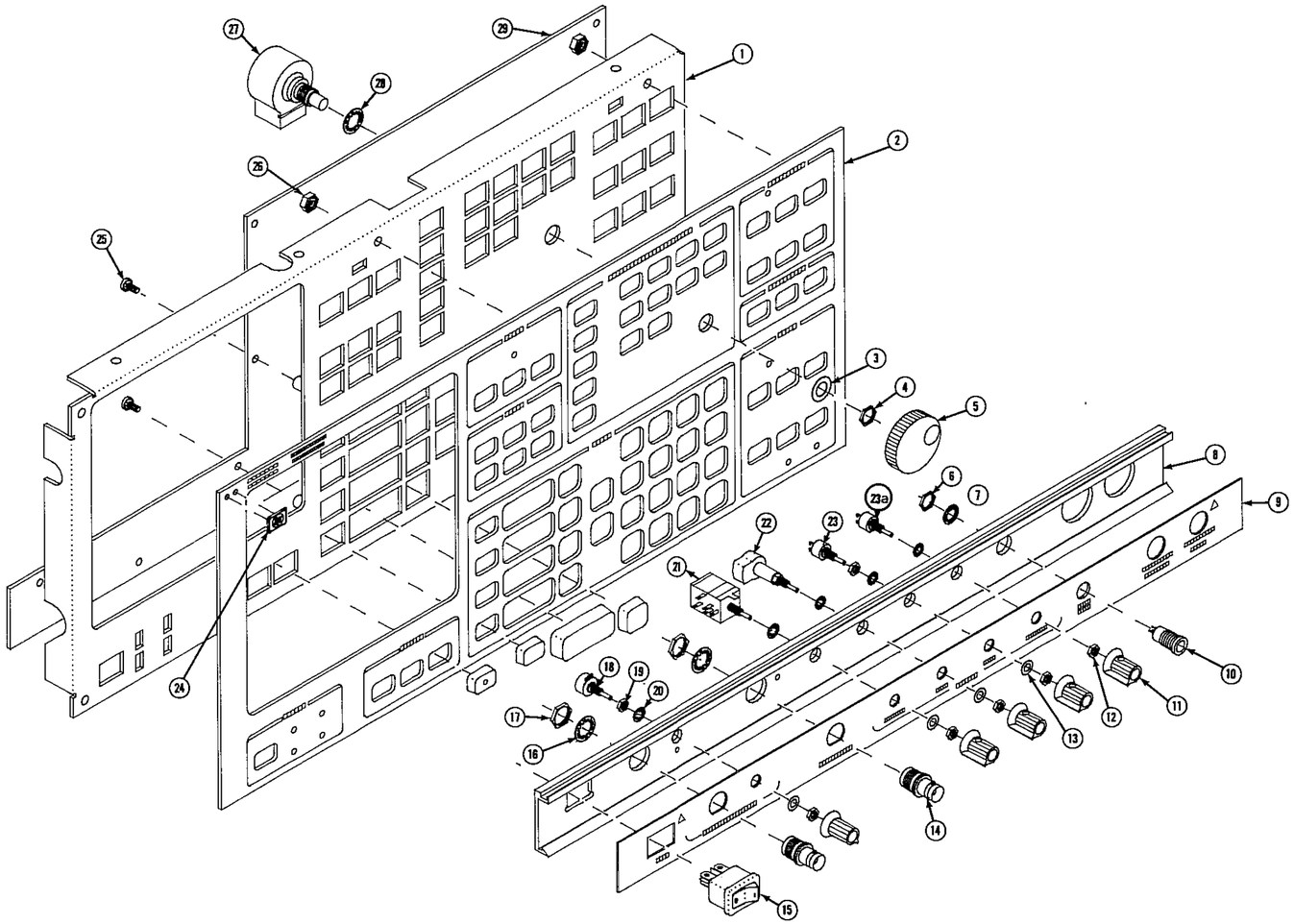

**Figure 9-2. Front Panel Assembly**

| Designator | Qty | Part Number | Description |
|---|---|---|---|
| 1 | 1 | 03585-60221 | LEFT SIDE ASSY |
| 2 | 1 | 03585-21207 | BAR-INP MTG |
| 3 | 1 | 03585-21203 | BAR-ANALOG MTG |
| 4 | 1 | 03585-04106 | BRKT-LO MTG |
| 5 | 1 | 03585-04101 | CVR-HVP |
| 6 | 1 | 03585-64201 | HSG-HVPS |
| 7 | 1 | 03585-00105 | DECK-MTG HVPS |
| 8 | 1 | 03585-00101 | DECK-HVPS |
| 9 | 1 | 03585-01231 | SPRT-CTR PNL |
| 10 | 1 | 1400-1122 | CLAMP |
| 11 | 1 | 03585-01205 | CLAMP-CRT SHLD |
| 12 | 1 | 5040-7783 | SUPPORT-CRT SH |
| 13 | 1 | 03585-21210 | BAR SUPPORT |
| 14 | 1 | 03585-04112 | COVER-67 |
| 15 | 1 | 03585-00601 | DIVIDER-DIGITAL |
| 16 | 1 | 03585-01209 | BD GUIDE DIGITAL |
| 17 | 1 | 03585-21224 | DIGITAL CLAMP-A |
| 18 | 1 | 03585-01230 | CLAMP-B DIGITAL |
| 19 | 1 | 03585-04113 | CUR-67B |
| 20 | 1 | 03585-61641 | CBL PDB-67-HVPS |

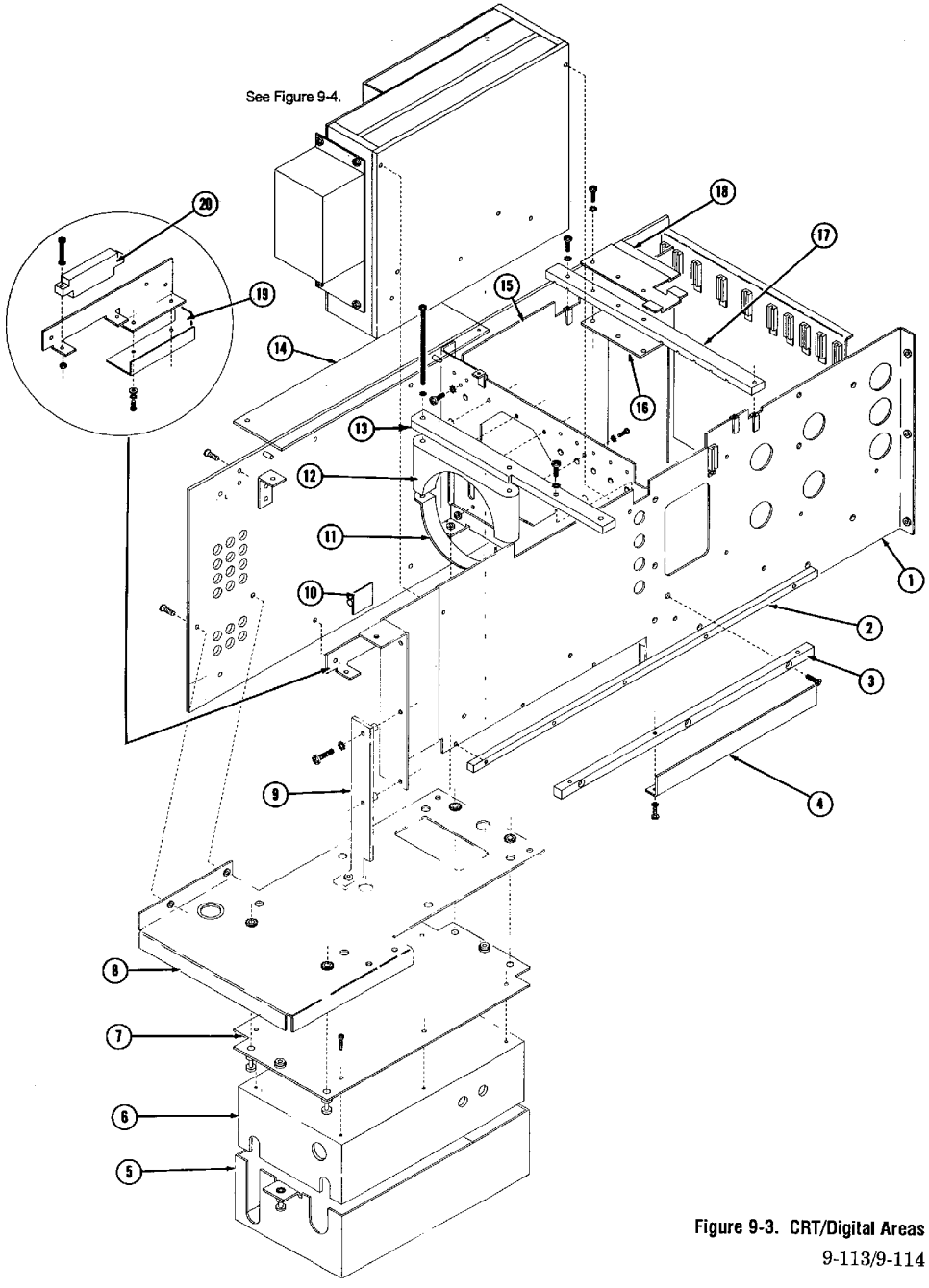


**Figure 9-3. CRT/Digital Areas**

Tracking Generator Assy 03585-60205

| Designator | Qty | Part Number | Description |
|---|---|---|---|
| 1 | 1 | 03585-01220 | BRKT-TR&R |
| 2 | | 03585-25106 | TG&R PLATE-6 |
| 3 | 1 | 03585-25104 | TG&R PLATE-4 |
| 4 | 1 | 03585-66581 | OSC BRD STD |
| 5 | | 03585-25105 | TG&R PLATE-5 |
| 6 | | 03585-25103 | TG&R PLATE-3 |
| 7 | | 03585-05101 | TG REAR-PLT-1 |
| 8 | | 03585-05102 | TG REAR-PLT-2 |

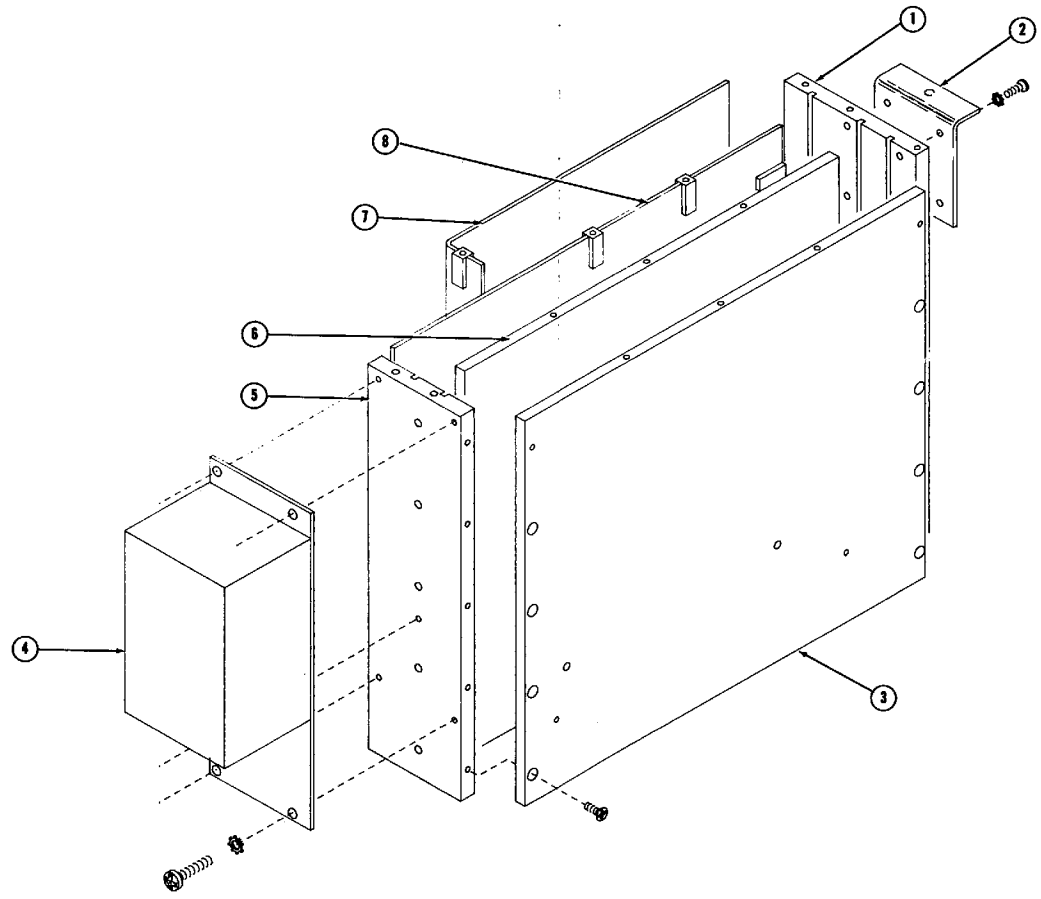


Figure 9-4. Tracking Generator/Oscillator Assembly

| Designator | Qty | Part Number | Description |
|---|---|---|---|
| 1 | 1 | 03585-21211 | BAR PS CLAMP |
| 2 | | 03585-60202 | RIGHT SIDE ASSY |
| 3 | | 03585-60301 | COVER ASSY |
| 4 | | 1400-0015 | CLAMP-CABLE |
| 5 | | 03585-00311 | CLAMP END |
| 6 | | 03585-42002 | RF-INPUT/CONV BX |
| 7 | | 03585-00302 | CUR-INP |
| 8 | | 03585-00308 | SHLD-REAR |
| 9 | | 03585-00310 | CLAMP-LONG |
| 10 | | 03585-60316 | SHLF-BTM |
| 11 | | 03585-00307 | SHLD-FRT |
| 12 | | 03585-60204 | IF SEC ASSY |
| 13 | | 03585-60217 | LO BOX ASSY |
| 14 | | 03585-01219 | BRKT-BAR |
| 15 | | 03585-21214 | CAMP-PS |
| 16 | | 03585-21215 | MCHD STDF-RF |
| 17 | | 03585-00608 | SHTF SHLD-VTO |
| 18 | | 03585-00311 | SHORTING BAR |
| 19 | | 2510-0041 | SCREWS (IF/LO SECTION) |

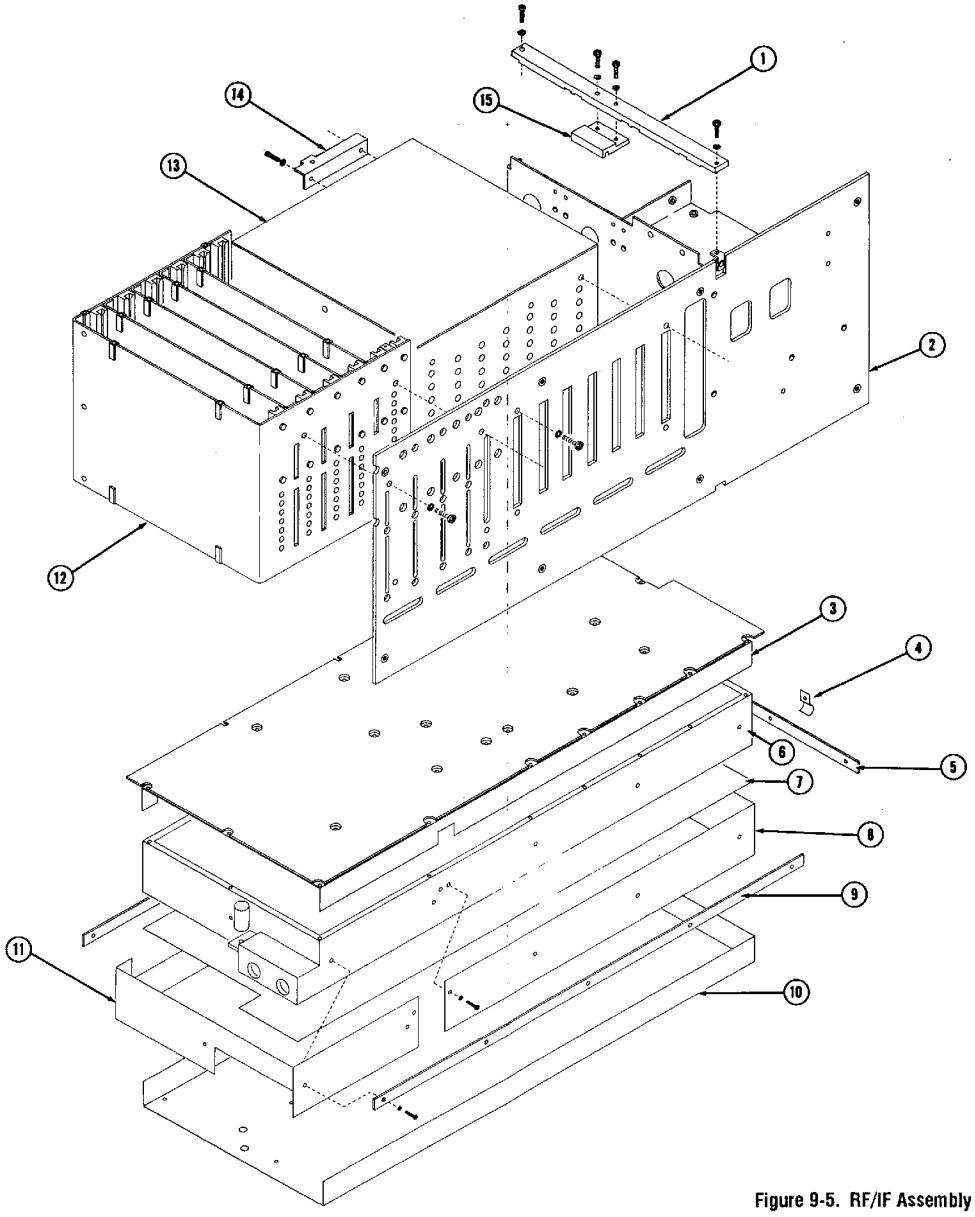


**Figure 9-5. RF/IF Assembly**

| Designator | Part Number | Description | Designator | Part Number | Description |
|---|---|---|---|---|---|
| 1 | 5020-8808 | Frame, rear | 31 | 1906-0212 | Rectifier |
| 2 | 03585-61675 | Cbl-assy, HP-IB | 32 | 2950-0035 | Nut-hex |
| 3 | 2110-0786 | Nut-hex | 33 | 2190-0099 | Washer-lock |
| 4 | 2190-0068 | Washer-lock | 34 | 03585-66577 | PC assy-AC protect |
| 5 | 0960-0041 | Plug | 35 | 2360-0125 | Screw |
| 6 | 03585-00213 | Panel, rear | 36 | 2580-0003 | Nut-hex |
| 7 | 9100-3939 | Filter plug | 37 | 03585-01227 | Brkt-rear cvr |
| 8 | 1400-0090 | Washer-flat | 38 | 9100-4060 | Transformer-power |
| 9 | 2100-0564 | Fuse holder | 39 | 03585-01213 | Brkt-T mount |
| 10 | 2110-0565 | Cap, fuse holder | 40 | 03585-01211 | Brkt-T |
| | | | 41 | 0890-0768 | Tubing-hts blue |
| 11 | 2190-0586 | Washer-lock | 42 | 3050-0152 | Washer-shoulder |
| 12 | 0380-0643 | Stdf-stud | 43 | 2520-0037 | Screw |
| 13 | 03585-68501 | Fan | | 03585-61625 | Cbl assy-disp output X(blue) |
| 14 | 2420-0001 | Nut-hex, fan | | 03585-61624 | Cbl assy-disp output Y(s. grn) |
| 15 | 3160-0562 | Grill, fan | | 03585-61623 | Cbl assy-disp output Z(orange) |
| | | | | 03585-61609 | Cbl assy-oven ref out (violet) |
| 16 | 2420-0003 | Nut-hex | | 03585-61612 | Cbl assy-ext ref in (l. green) |
| 17 | 2190-0851 | Washer-lock | | 03585-61614 | Cbl assy-IF output (white) |
| 18 | 0590-0167 | Nut-thumb | | 03585-61615 | Cbl assy-video output (black) |
| 19 | 3150-0218 | Filter, fan | | 03585-61665 | Cable, power |
| 20 | 2360-0117 | Screw | | 03585-61610 | Cable (gray) |
| | | | | 03585-61617 | Cable (orange) |
| 21 | 03585-04141 | Cover-rear panel | | 03585-61606 | Cable (blue) |
| 22 | 2360-0125 | Screw | | 03585-61668 | Cbl assy |
| 23(U3) | 1826-0402 | Pwr V Reg, +15V | | 03585-61652 | Cbl assy |
| 24(U2) | 1820-0430 | Lin Reg, 5V | | 03585-61653 | Cbl assy, 70-RP |
| 25 | 2200-0111 | Screw | | 0160-4603 | Capacitor, 1uF |
| | | | | 8150-4565 | Wire (W/Blk/Gry) |
| 26 | 3050-0105 | Washer-flat | | 8150-4555 | Wire (Gr/Y) |
| 27 | 1901-0526 | Diode assy | | 8150-4299 | Jumper, 3" (Br) |
| 28 | 2510-0115 | Screw | | 7120-3530 | Label, warning |
| 29 | 2190-0586 | Washer-lock | | 03585-04114 | Shield, plastic |
| 30 | 3050-0071 | Washer-flat | | 03585-01215 | Brkt, line filter |
| | | | | 2360-0220 | Screw, fan |

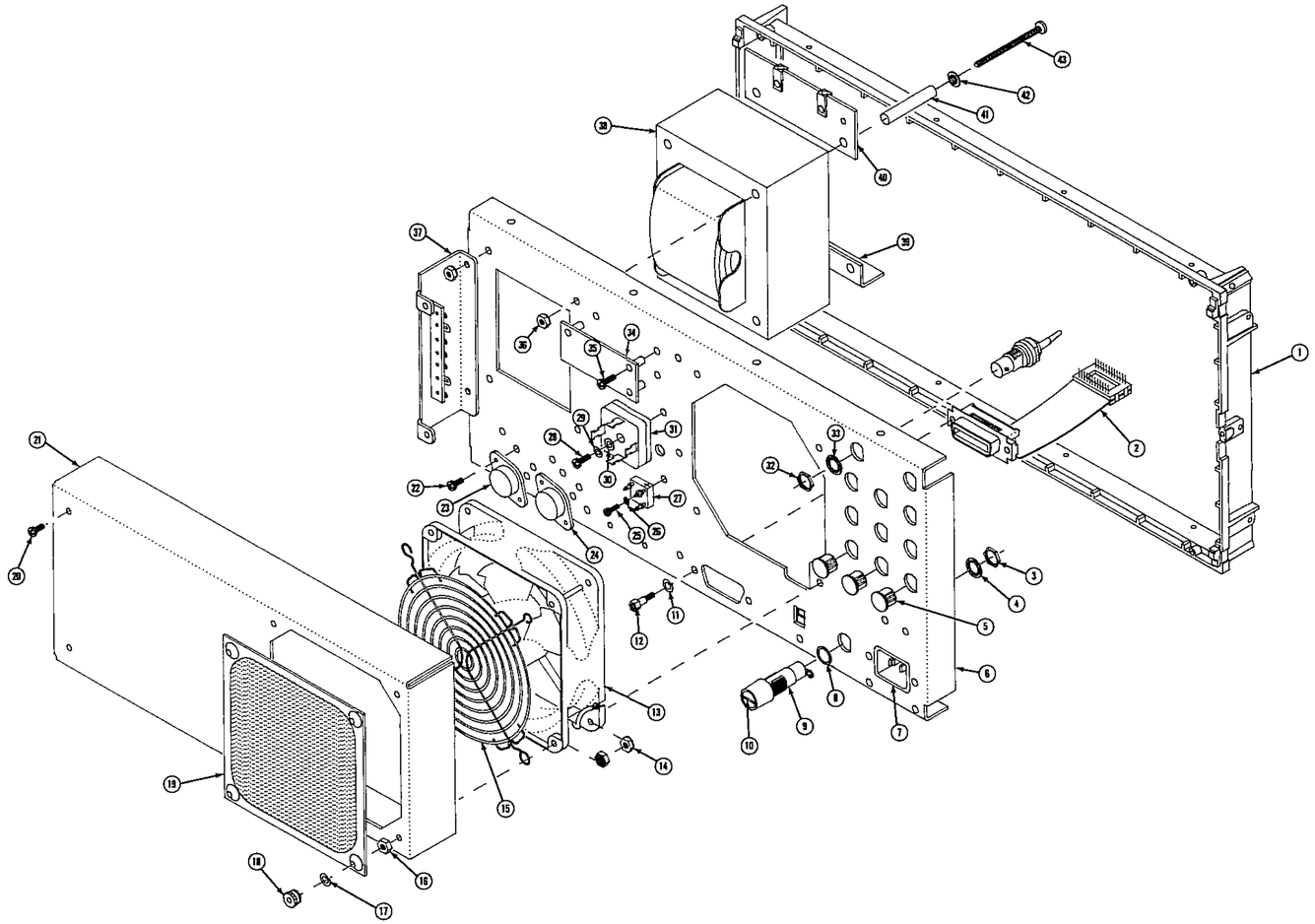

**Figure 9-6. Rear Panel Assembly**

# SECTION X
# SCHEMATICS

# SECTION X
# SCHEMATIC DIAGRAMS

## 10-1. INTRODUCTION

This manual section contains all schematic diagrams for the 3585 Spectrum Analyzer. The schematics are numbered using first a letter designator such as "A, B, etc." followed by a numeric designator. The letter designator indicates the functional group (Service Group) within the instrument that the schematic documents. The numeric designator indicates a subsection within the main functional group. Table 10-1 lists the functional groups into which the 3585 is divided. Individual schematics are listed in Table 10-2.

**Table 10-1. Instrument Functional Groups**

| Group | Description |
|---|---|
| A | RF/IF |
| B | Local Oscillator |
| C | Central Processor |
| D | Display |
| E | Tracking Generator |
| F | HP-IB |
| G | Power Supplies |

The schematic designators also correspond to the service group divisions found in Section 8 of this volume and the Service information found in Section II. This will aid in cross referencing schematics to other sections of the manual set.

## Table 10-2. List of Schematics

| Board Designator | Schematic Number | Schematic Name | Page |
|---|---|---|---|
| A1 | A-1a | Input/Conversion | 10-5/10-6 |
| A1 | A-1b | Input/Conversion | 10-7/10-8 |
| A2-A6c | A-2 | Conversion Section | 10-9/10-10 |
| A14 | A-4 | Log Amplifier | 10-17 |
| A15 | A-5 | Video Filter | 10-19/10-20 |
| A16 | A-6 | Analog-To-Digital Converter | 10-21/10-22 |
| A17 | A-3a | IF Filter No. 1 | 10-11/10-12 |
| A18 | A-3b | IF Gain | 10-13/10-14 |
| A19 | A-3c | IF Filter No. 2 | 10-15/10-16 |
| A21 | B-1a | 90/10 MHz/Ref | 10-23/10-24 |
| A22 | B-2a | First LO VTO | 10-27/10-28 |
| A23 | B-3a | Step Synthesizer VTO | 10-37/10-38 |
| A24 | B-2b | First LO Buffer | 10-29/10-30 |
| A25 | B-2c | Sum Loop Mixer | 10-31/10-32 |
| A26 | B-3b | Step Phase Detector | 10-39/10-40 |
| A27 | B-2d | First LO VTO Control | 10-33/10-34 |
| A28 | B-2e | Sum Loop Phase Detector | 10-35/10-36 |
| A31 | B-4a | VTO and Dividers | 10-41 |
| A32 | B-4b | Analog | 10-43/10-44 |
| A33 | B-4c | Divided By N Counter | 10-45/10-46 |
| A34 | B-5 | Interface And Trigger | 10-47/10-48 |
| A49 | C-1 | RAM Board | 10-49/10-50 |
| A82 | C-2a | Central Processor | 10-51a/10-51b |
| A82 | C-2b | Central Processor Support Circuits | 10-52a/10-52b |
| A83 | C-3 | I/O Board | 10-53/10-54 |
| A83 | F | HP-IB Interface | 10-69/10-70 |
| A87 | C-4 | Keyboard | 10-55/10-56 |
| A50/A51 | E-1 | Phase Detector | 10-65/10-66 |
| A52/A53 | E-2 | Tracking Generator/100.35 MHz VCO | 10-67/10-68 |
| A85 | D-1 | Digital Display Driver | 10-57 |
| A86 | D-2 | Analog Display Driver | 10-59/10-60 |
| A65/A66 | D-3b | Hi Voltage Board | 10-63/10-64 |
| A67 | D-3a | XYZ Board | 10-61/10-62 |
| A71 | G-2a | +7.7V Power Supply | 10-75/10-76 |
| A72 | G-2b | +5V Power Supply | 10-77/10-88 |
| A73 | G-2c | +18V Power Supply | 10-79/10-80 |
| A74 | G-2d | −18V Power Supply | 10-81/10-82 |
| A75 | G-1a | Power Supply Control | 10-71/10-72 |
| A89 | G-1b | Power Distribution | 10-73/10-74 |
| A81 | B-1b | Oven Oscillator | 10-25/10-26 |

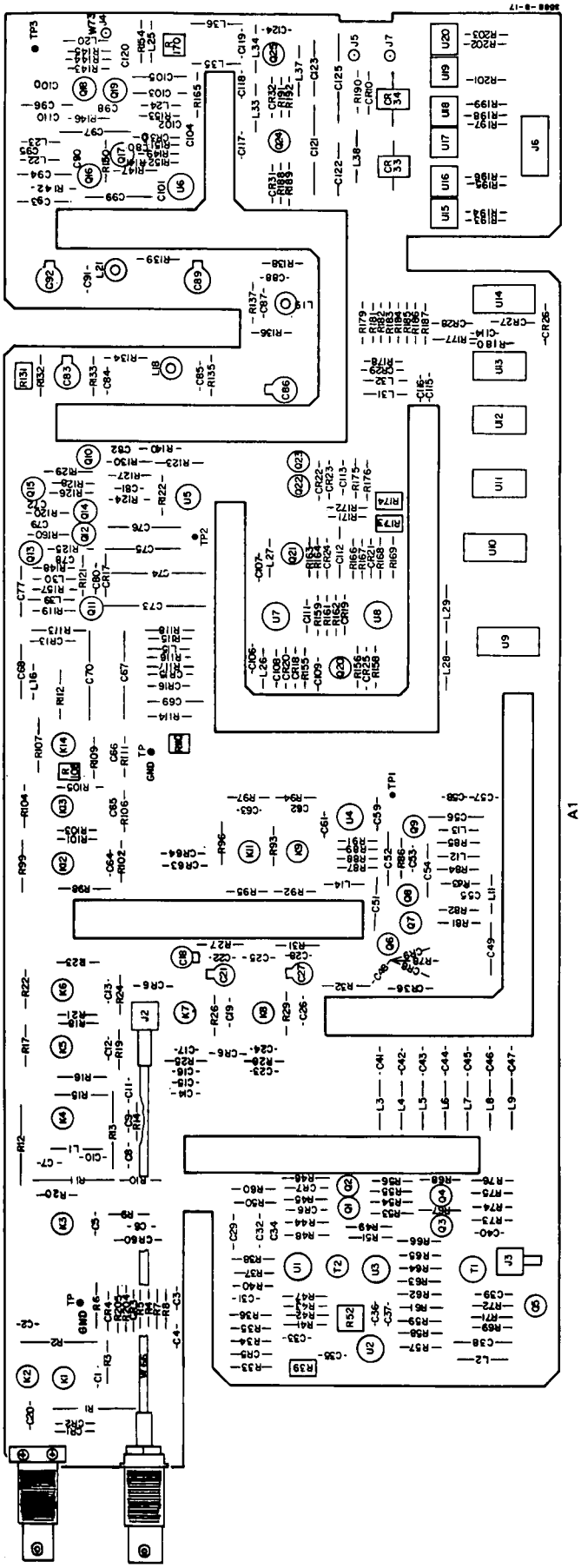
A1
03585-68501

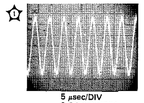

5 µsec/DIV
0.01 volts/DIV

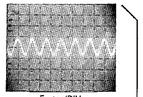

5 µsec/DIV
0.01 volts/DIV

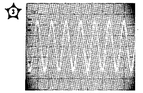

5 µsec/DIV
0.01 volts/DIV

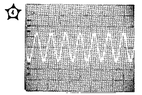

5 µsec/DIV
0.01 volts/DIV

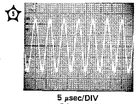

5 µsec/DIV
.01 volts/DIV

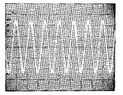

5 µsec/DIV
0.01 volts/DIV

Set-up Conditions:

1. Input a 150 kHz, 0 dBm signal at the Terminated Input.
2. Press Instrument Preset.
3. Set RANGE to − 15 dBm.

dc Coupled

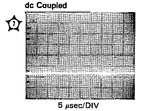

5 µsec/DIV
0.01 volts/DIV

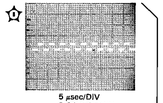

5 µsec/DIV
0.01 volts/DIV

Set-up Conditions:

1. Press SHIFT 605
2. Press Instrument Preset.
3. Set Manual Frequency to 200 kHz.

**NOTE**

*All waveforms are taken using a 10:1 probe and ac coupling unless otherwise noted.*

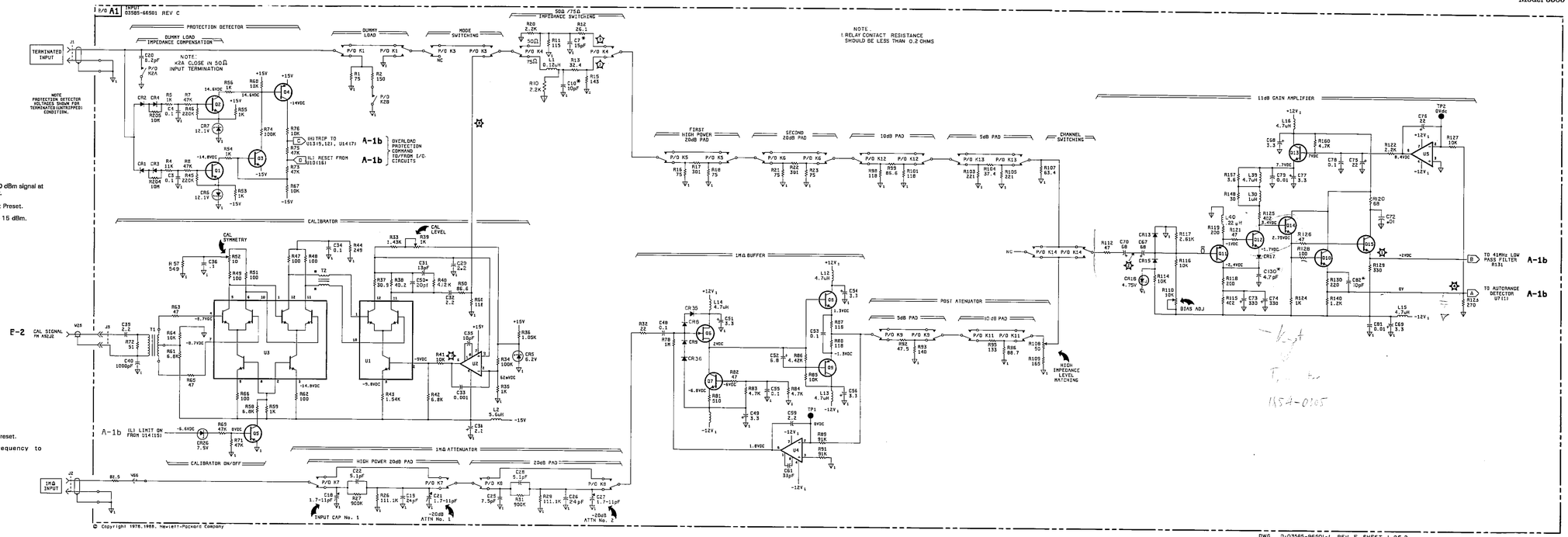


# A-1a

Figure 10-1. Input/Conversion Schematic (66501)

## Range Switching

| Opto-Isolator Inputs | | | | | Opto-Isolator Outputs | | | |
|---|---|---|---|---|---|---|---|---|
| Range (dBm) | R198 | H ≥ 3.5V; L ≤ 0.6V R199 | R193 | R197 | Range (dBm) | U17(6) | H ≥ -7V; L ≤ -14V U18(5) | U15(7) | U17(7) |
| -25 | L | L | L | L | -25 | L | L | L | L |
| -20 | H | L | L | L | -20 | H | L | L | L |
| -15 | L | H | L | L | -15 | L | H | L | L |
| -10 | H | H | L | L | -10 | H | H | L | L |
| - 5 | L | L | H | L | - 5 | L | L | H | L |
| 0 | H | L | H | L | 0 | H | L | H | L |
| 5 | L | H | H | L | 5 | L | H | H | L |
| 10 | H | H | H | L | 10 | H | H | H | L |
| 15 | L | L | H | H | 15 | L | L | H | H |
| 20 | H | L | H | H | 20 | H | L | H | H |
| 25 | L | H | H | H | 25 | L | H | H | H |
| 30 | H | H | H | H | 30 | H | H | H | H |

| Lo Impendance Channel | | | | Hi Impedance Channel | | | |
|---|---|---|---|---|---|---|---|
| U10(11) | H ≥ 0.6V; L ≤ -13.5V U10(12) | U9(13) | U9(12) | U10(14) | H ≥ -0.6V; L ≤ -13.5V U10(13) | U9(11) | U9(10) |
| L | L | L | L | L | L | L | L |
| H | L | L | L | H | L | L | L |
| L | H | L | L | L | H | L | L |
| H | H | L | L | H | H | L | L |
| L | L | H | L | L | L | H | L |
| H | L | H | L | H | L | H | L |
| L | H | H | L | L | H | H | L |
| H | H | H | L | H | H | H | L |
| L | L | L | H | L | L | L | H |
| H | L | L | H | H | L | L | H |
| L | H | L | H | L | H | L | H |
| H | H | L | H | H | H | L | H |
| L | L | H | H | L | L | H | H |
| H | L | H | H | H | L | H | H |
| L | H | H | H | L | H | H | H |
| H | H | H | H | H | H | H | H |

| Lo Impedance Switching Logic Outputs | | | | Hi Impedance Switching Logic Outputs | | | |
|---|---|---|---|---|---|---|---|
| U11(4) | H ≥ -8V; L ≤ -14V U11(3) | U12(4) | U12(3) | U11(11) | H ≥ -8V; L ≤ -14V U11(10) | U12(11) | U12(10) |
| H | H | H | H | H | H | H | H |
| L | H | H | H | L | H | H | H |
| H | L | H | H | H | L | H | H |
| L | L | H | H | L | L | H | H |
| H | H | L | H | H | H | L | H |
| L | H | L | H | L | H | L | H |
| H | L | L | H | H | L | L | H |
| L | L | L | H | L | L | L | H |
| H | H | H | L | H | H | H | L |
| L | H | H | L | L | H | H | L |
| H | L | H | L | H | L | H | L |
| L | L | H | L | L | L | H | L |
| H | H | L | L | H | H | L | L |
| L | H | L | L | L | H | L | L |
| H | L | L | L | H | L | L | L |
| L | L | L | L | L | L | L | L |

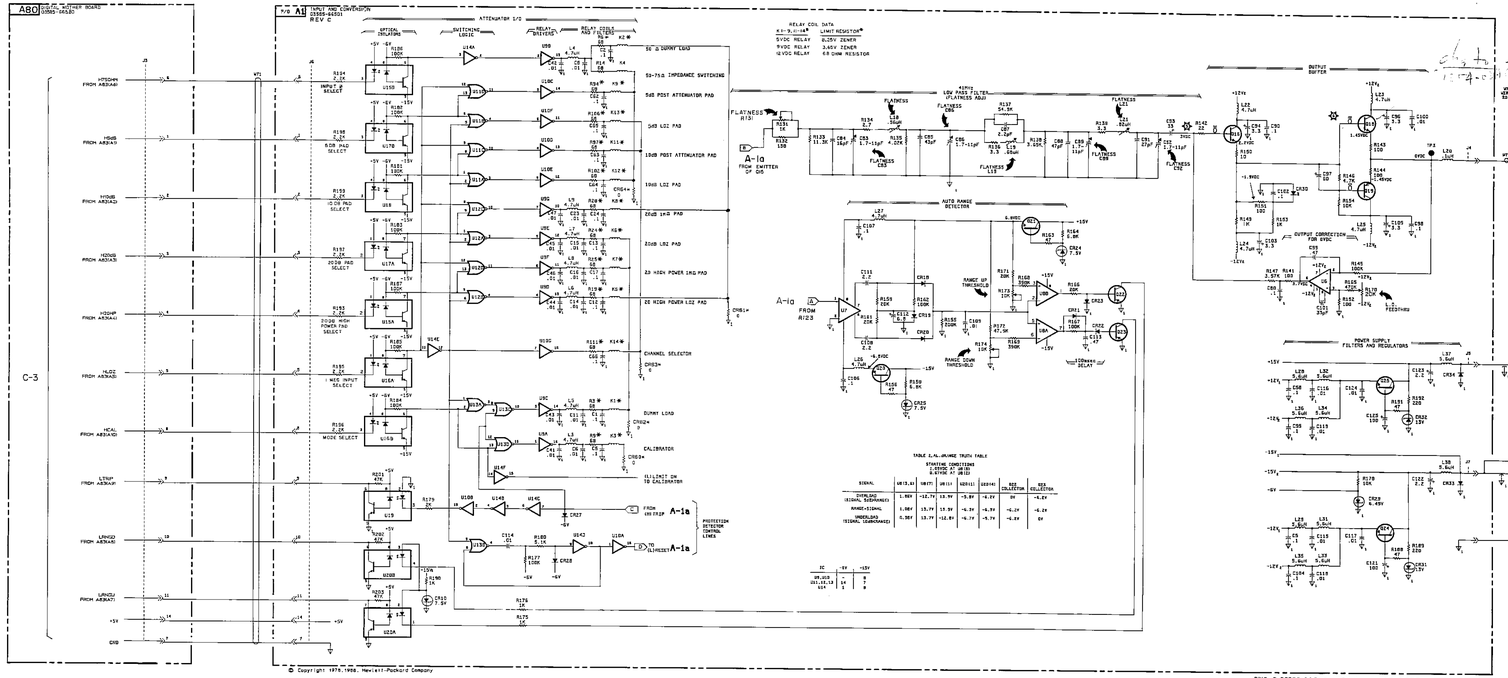


**A-1b**

p/o Figure 10-1. Input/Conversion Schematic (66501)

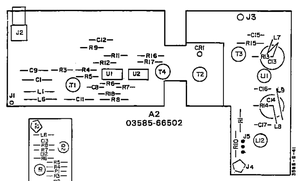


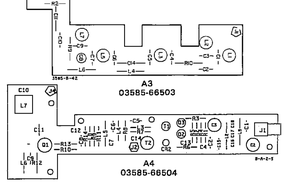


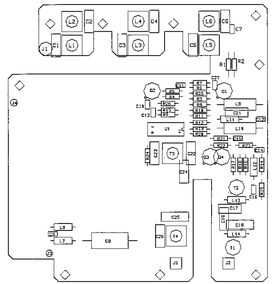

Rev E
03585-66505

Measurement Conditions

1. Enter:
Shift 603
Instrument Preset
Manual Entry 10MHz
Range -25Bm
Autorange Off

2. All dBm measurements should be made with a 50 Ω input spectrum analyzer (HP 8556B) and a 20:1 resistive divider probe with a 1 kΩ resistance (HP 10020A)

3. The spectrum analyzer/resistive probe combination should be calibrated with an accurate amplitude input signal to reduce errors.

4. All values are nominal, ±3dB.

NOTE

The 20:1 probe attenuates the signals actual level at 26dB but does not load down the conversion circuitry. Other types of probes will load down the conversion circuitry.

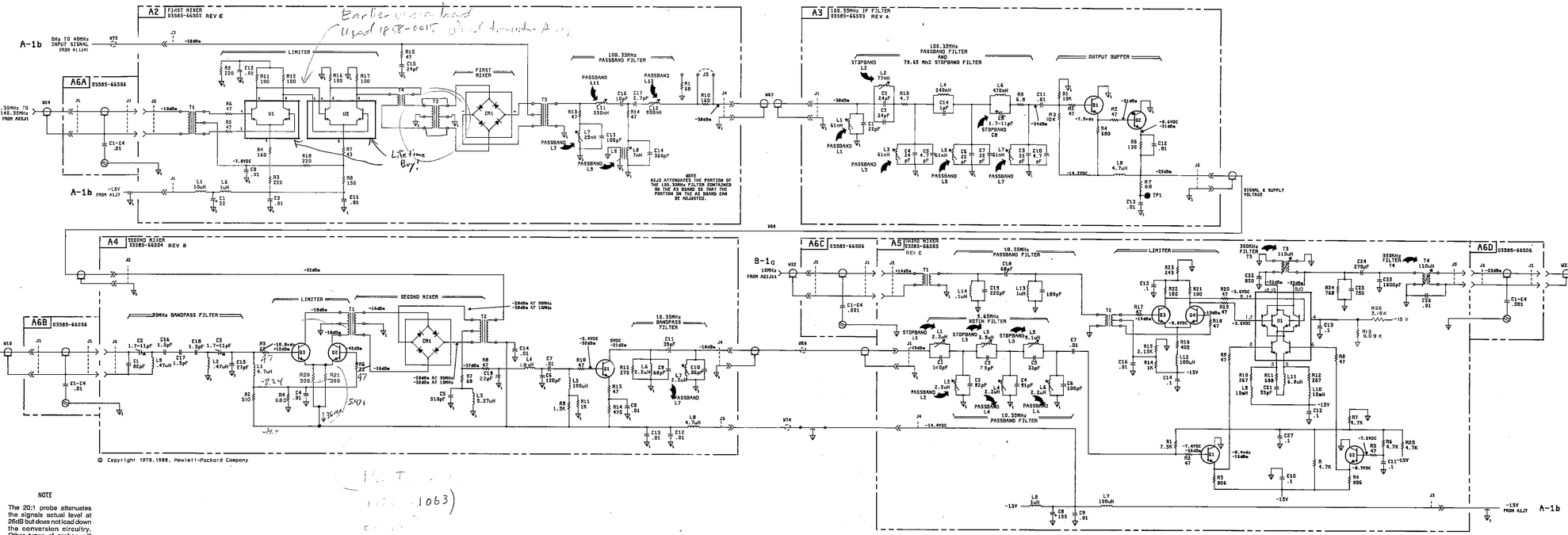




A-2

Figure 10-2. Conversion Section Schematic (66502-66505)

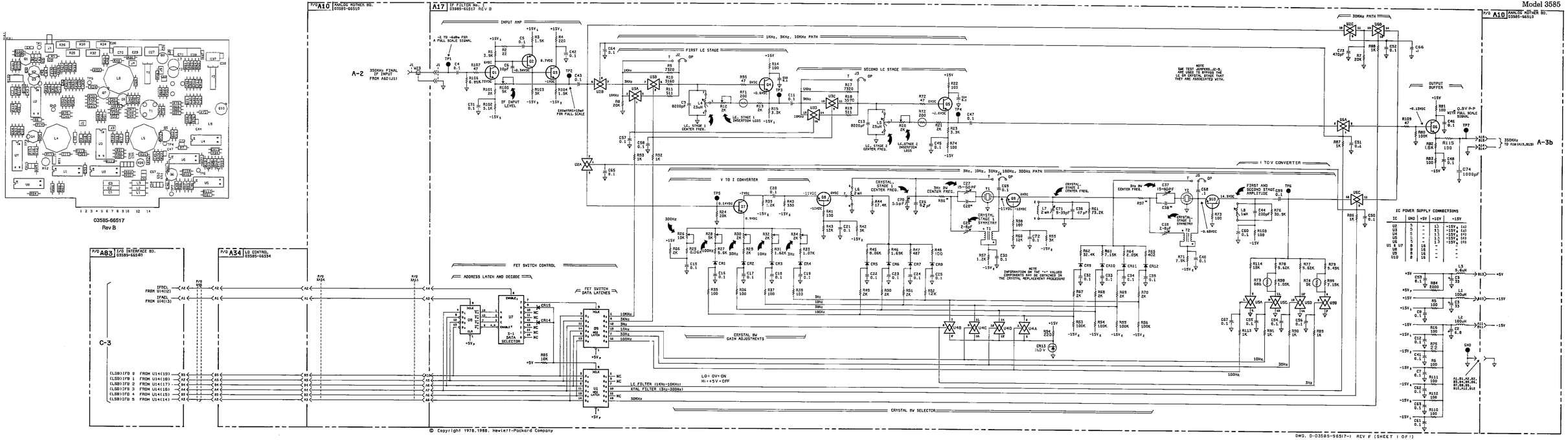


# A-3a

Figure 10-3. IF Filter No. 1 (66517)

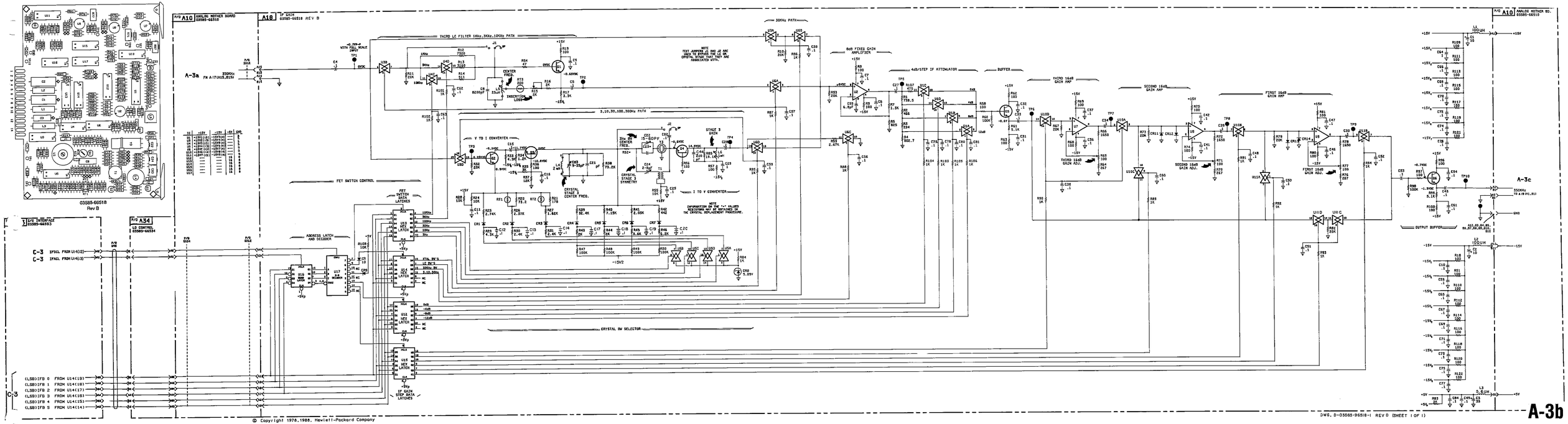




Figure 10-4. IF Gain (66518)

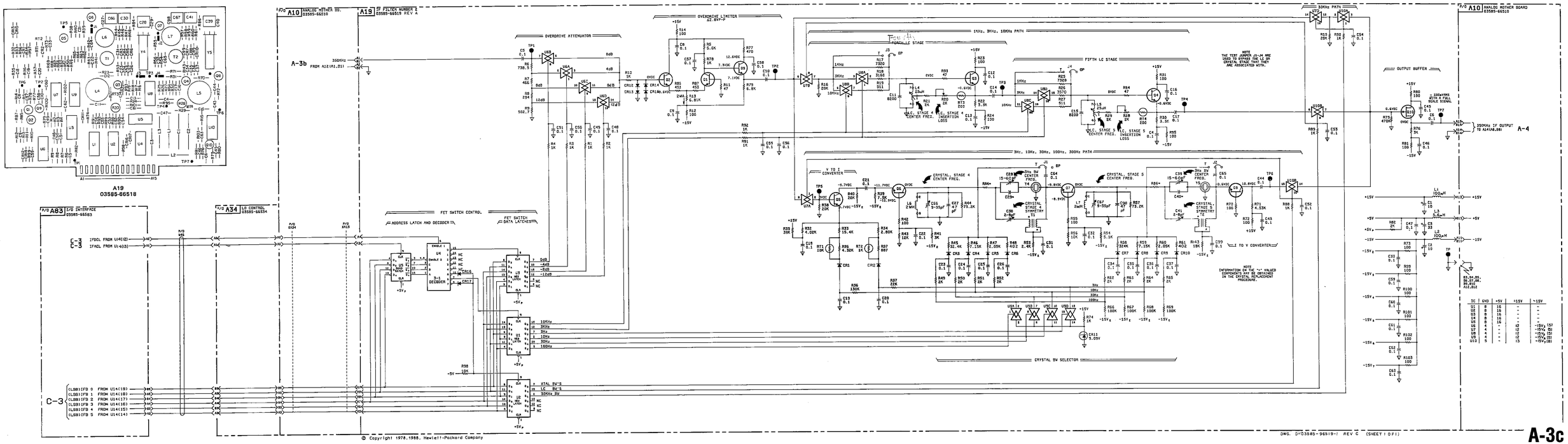




Figure 10-5. IF Filter No. 2 (66519)

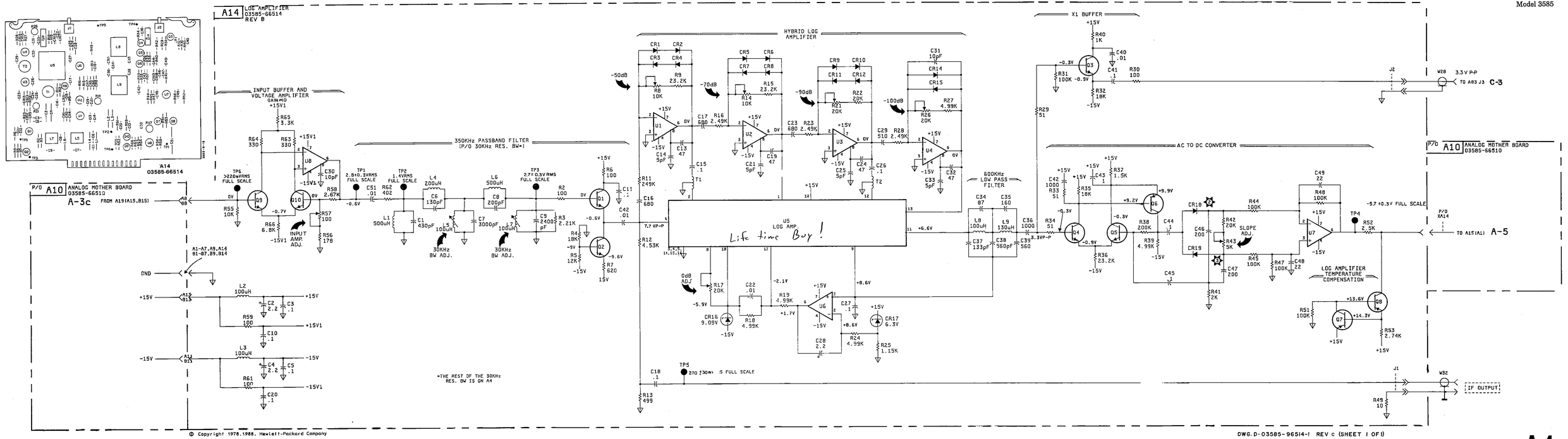




DWG. D-03585-96514-1 REV C (SHEET 1 OF 1)

A-4

Figure 10-6. Log Amplifier Schematic (66514)

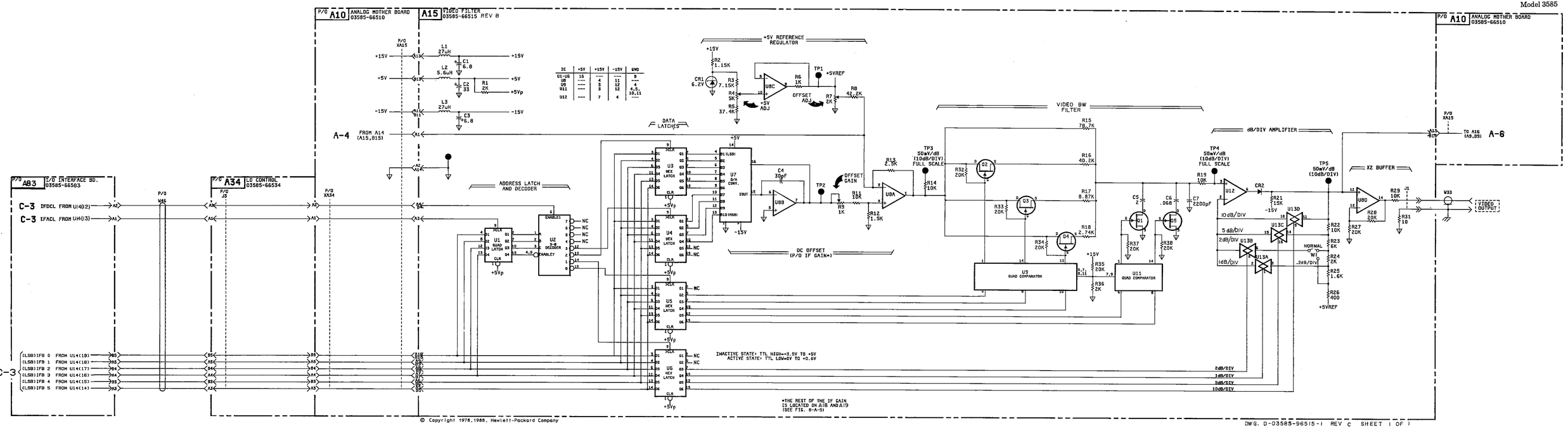






Figure 10-7. Video Filter Schematic (66515)

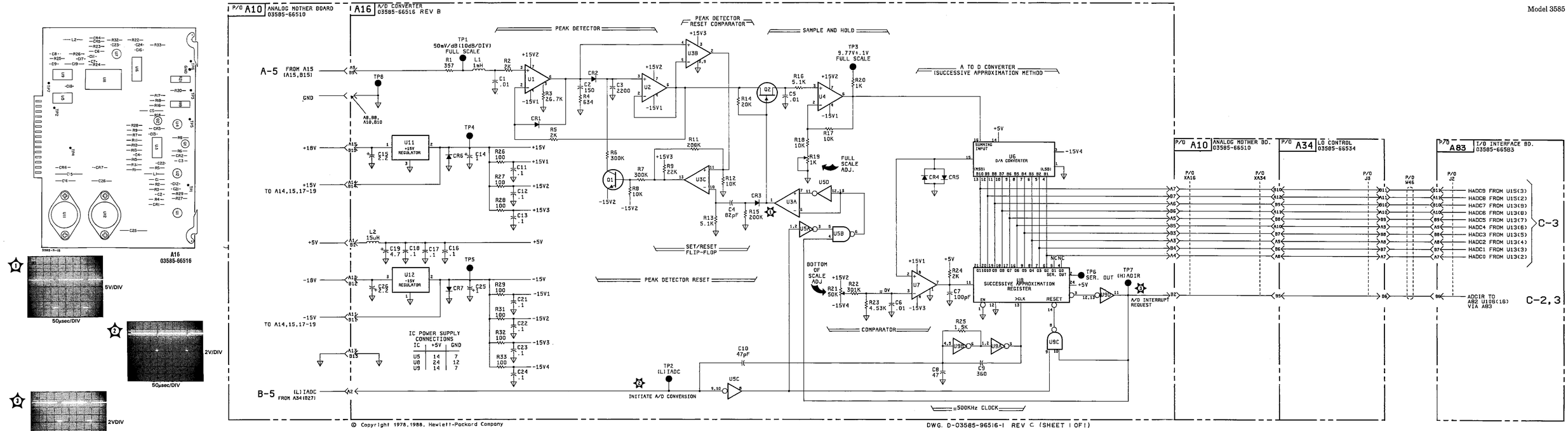




Figure 10-8. Analog-To-Digital Converter (66516)

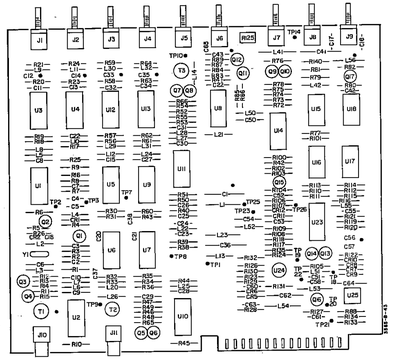

A21
03585-66521

Shorted Ground Lead Required

1 — 1V/DIV — .05μsec/DIV

Shorted Ground Lead Required

2 TP9 — 2V/DIV — .05 μsec/DIV

Use Oscilloscope 500 Input

3 TP10 — 0.5V/DIV — .05μsec/DIV

Use Oscilloscope 500 Input

4 TP16 — 0.1V/DIV — .05μsec/DIV

Use Oscilloscope 500 Input

5 TP14 — 0.1V/DIV — .5 μsec/DIV

Use Oscilloscope 500 Input

6 T15 — 0.2V/DIV — .5 μsec/DIV

AC Coupled 10:1

7 TP5 — 0.02V/DIV — .05 μsec/DIV

AC Coupled 10:1

8 — 0.02V/DIV — .05 μsec/DIV

AC Coupled 10:1

9 — 0.02V/DIV — .05μsec/DIV

DC Coupled 10:1

10 — 0.1V/DIV — .05 μsec/DIV

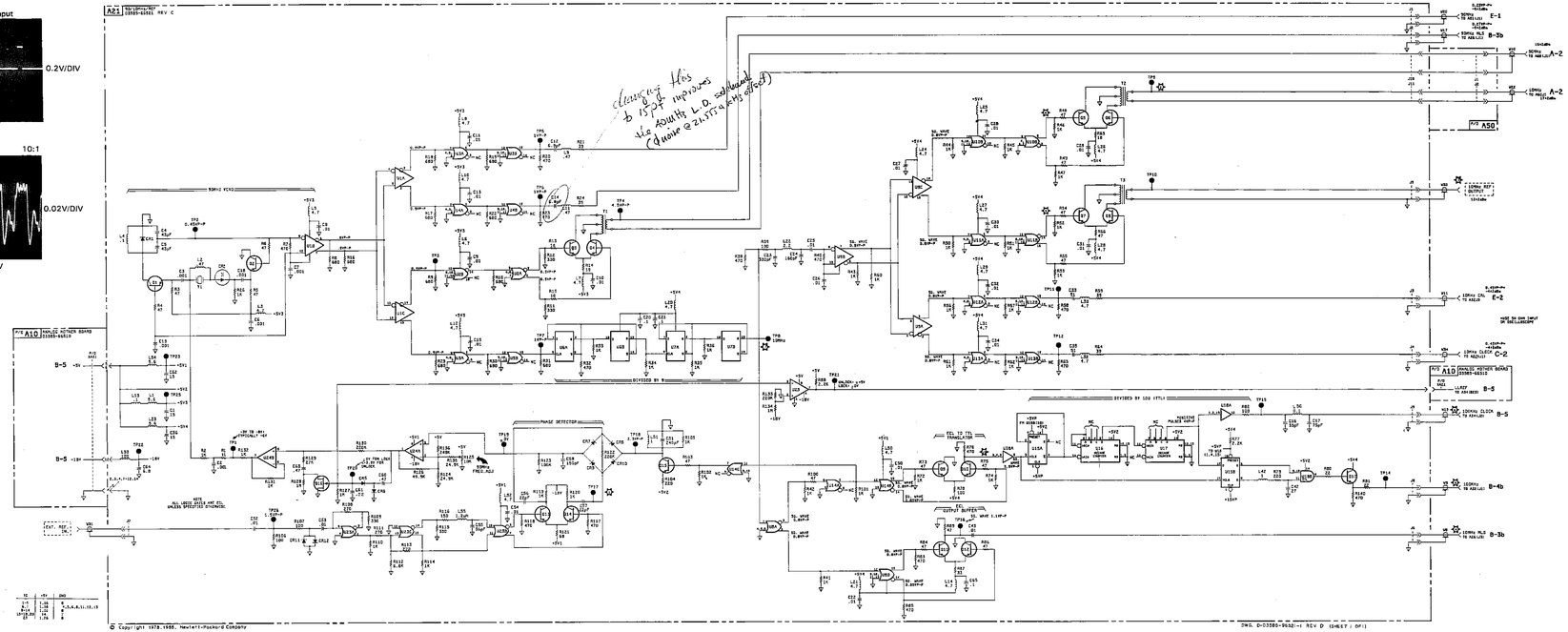



**B-1a**

Figure 10-9. 90/10MHz/Ref (66521)

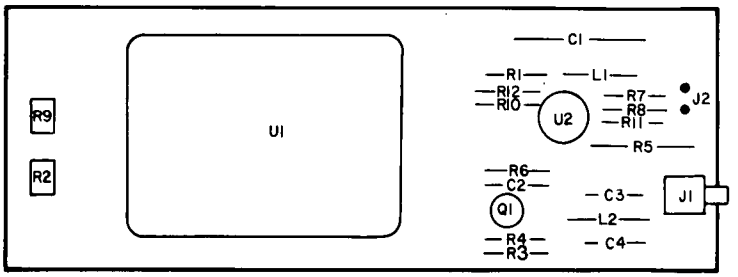


A81
03585-66581

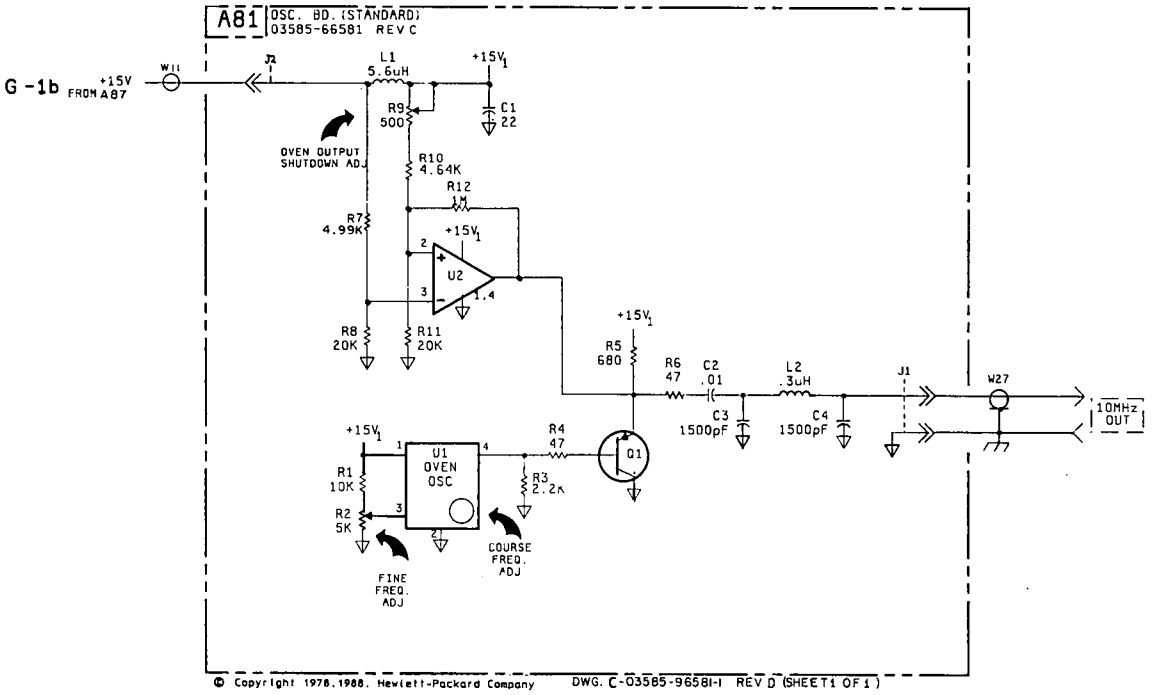


**B-1b**

Figure 10-10. Oven Oscillator (66581)

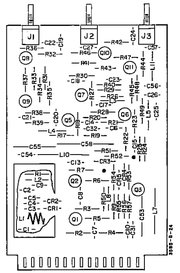

A22
03585-66522

**Note**

Set up conditions for dBm measurements are as follows:

1. Disconnect the cables attached to A22 J1, J2, J3.

2. Ground TP2.

3. Use a 1kΩ, 20:1 divider probe. Read the spectrum analyzer directly. Do not compensate for the 20:1 ratio of the probe.

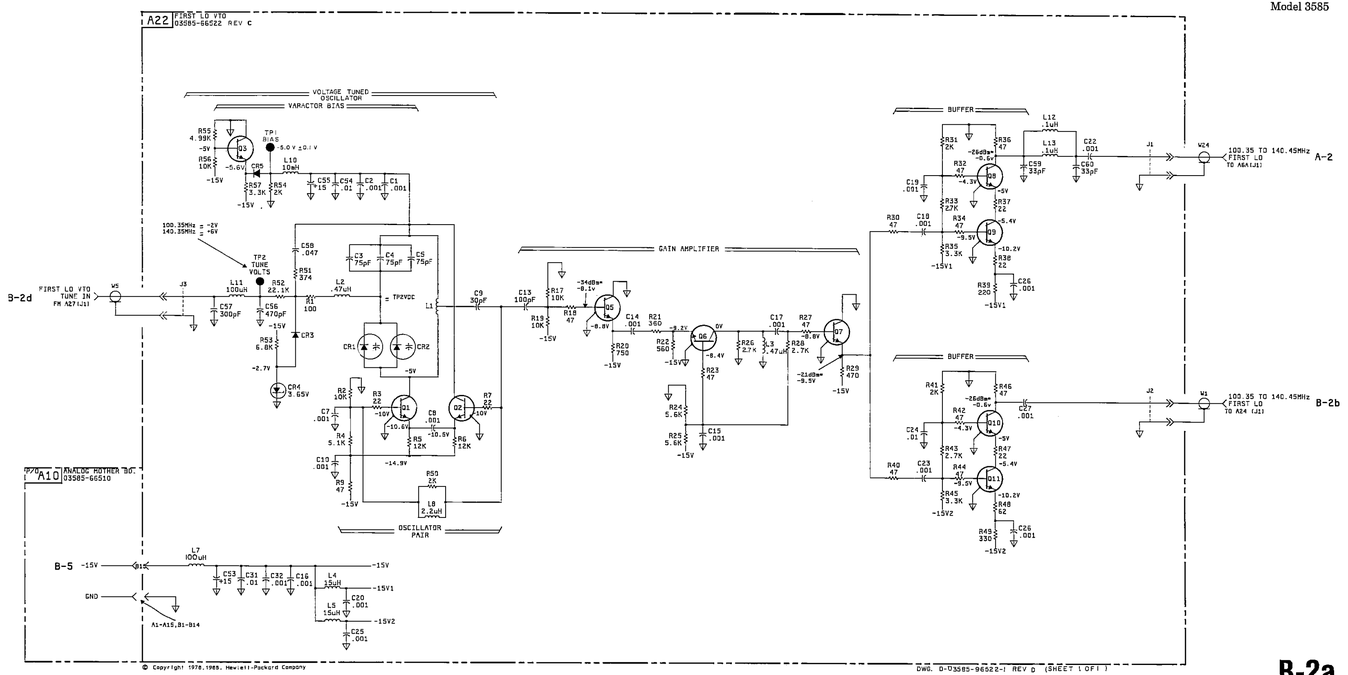


**B-2a**

Figure 10-11. First LO VTO (66522)

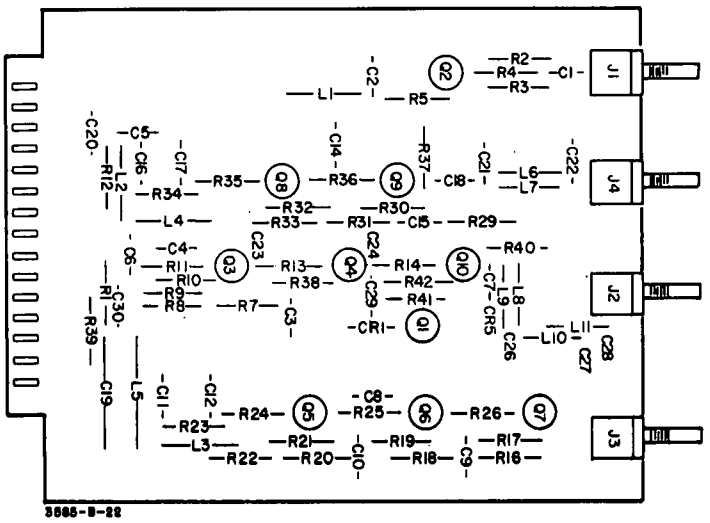


A24
03585-66524

**NOTE**

Set up conditions for dBm measurements are as follows:

1. Disconnect the cables attached to A22 J1, J3 and A24, J2, J3, J4.

2. Ground A22 TP2 or A22 J3.

3. Use a 1kΩ, 20:1 divider probe. Read the spectrum analyzer directly. Do not compensate for the 20:1 divider ratio of the probe.

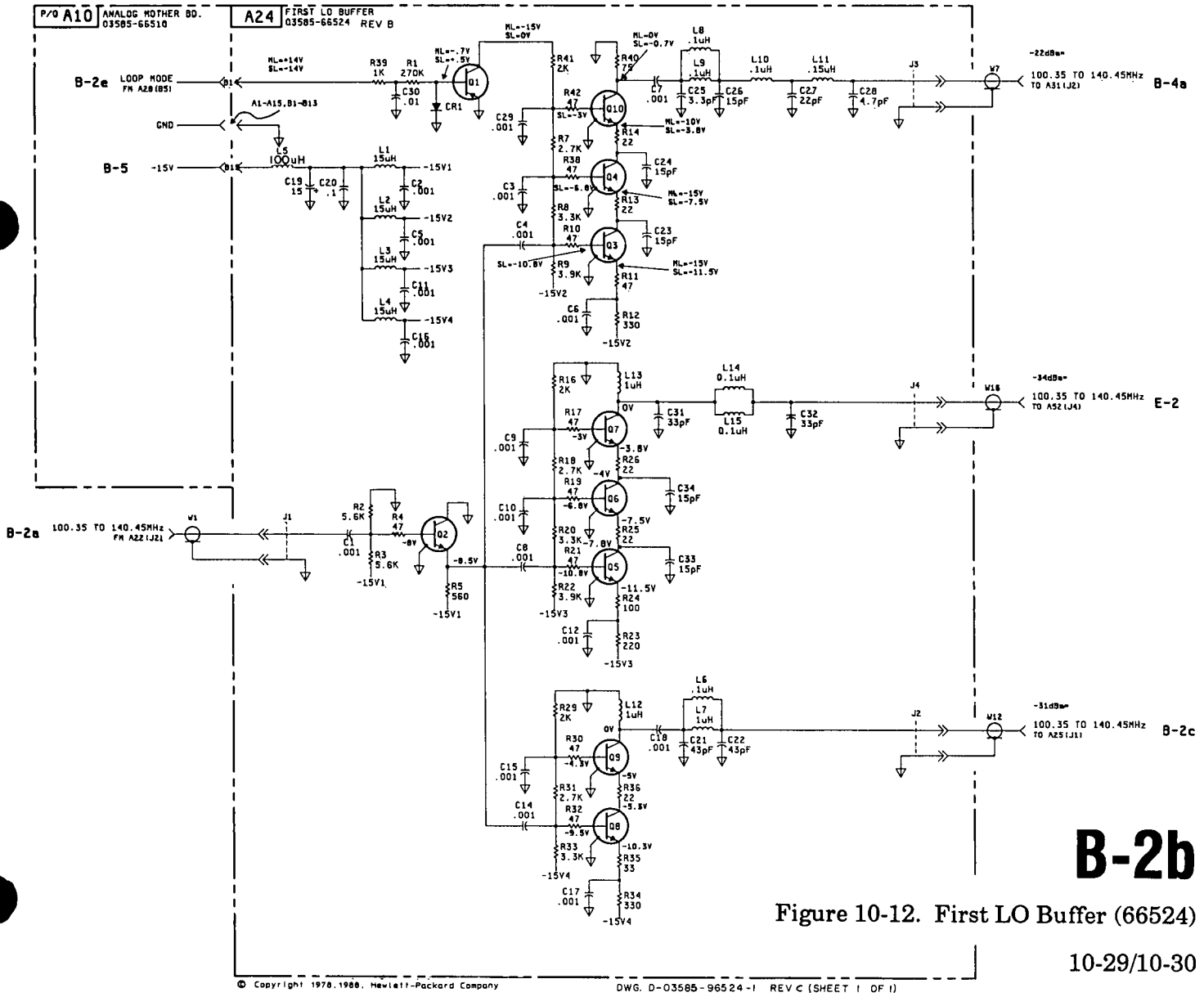


**B-2b**

Figure 10-12. First LO Buffer (66524)

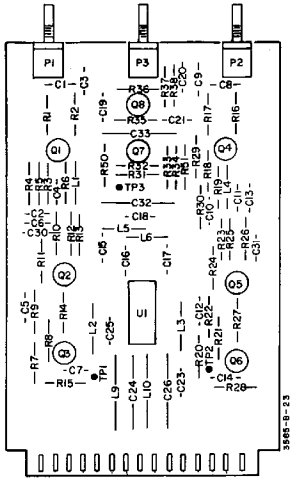

A25
03585-66525

**NOTE**

Set up conditions for dBm and Vpp are as follows:

1. Disconnect the cables attached to A25 J2.

2. Enter: SHIFT 601, Instr Preset, Manual 650kHz.

3. Use a 1kΩ, 20:1 divider probe for the dBm measurements. Read the spectrum analyzer directly. Do not compensate for the 20:1 divider ratio of the probe.

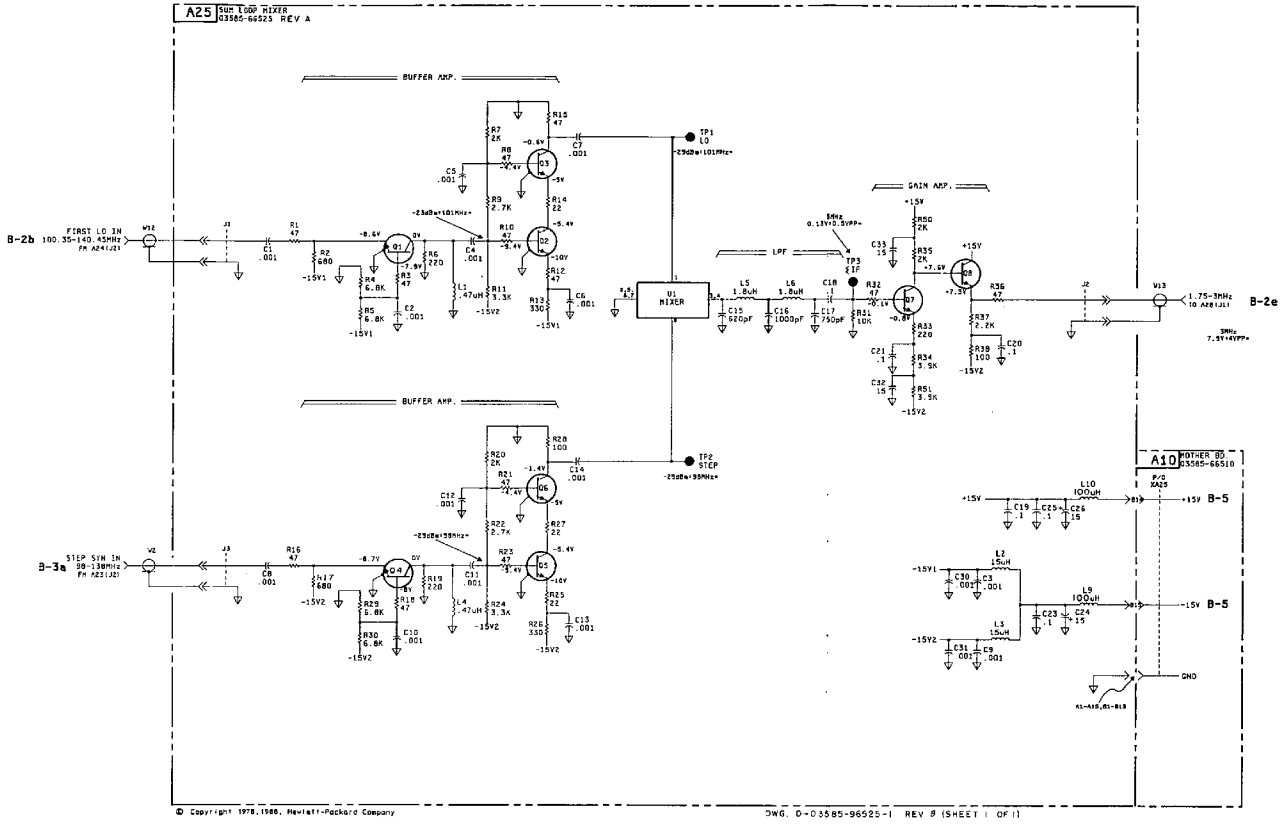


**B-2c**

Figure 10-13. Sum Loop Mixer (66525)

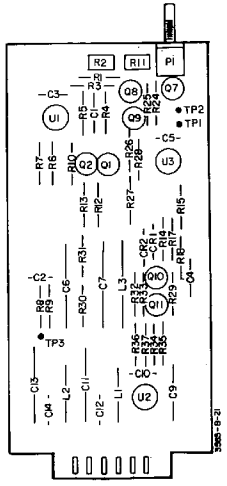

A27
03585-66527

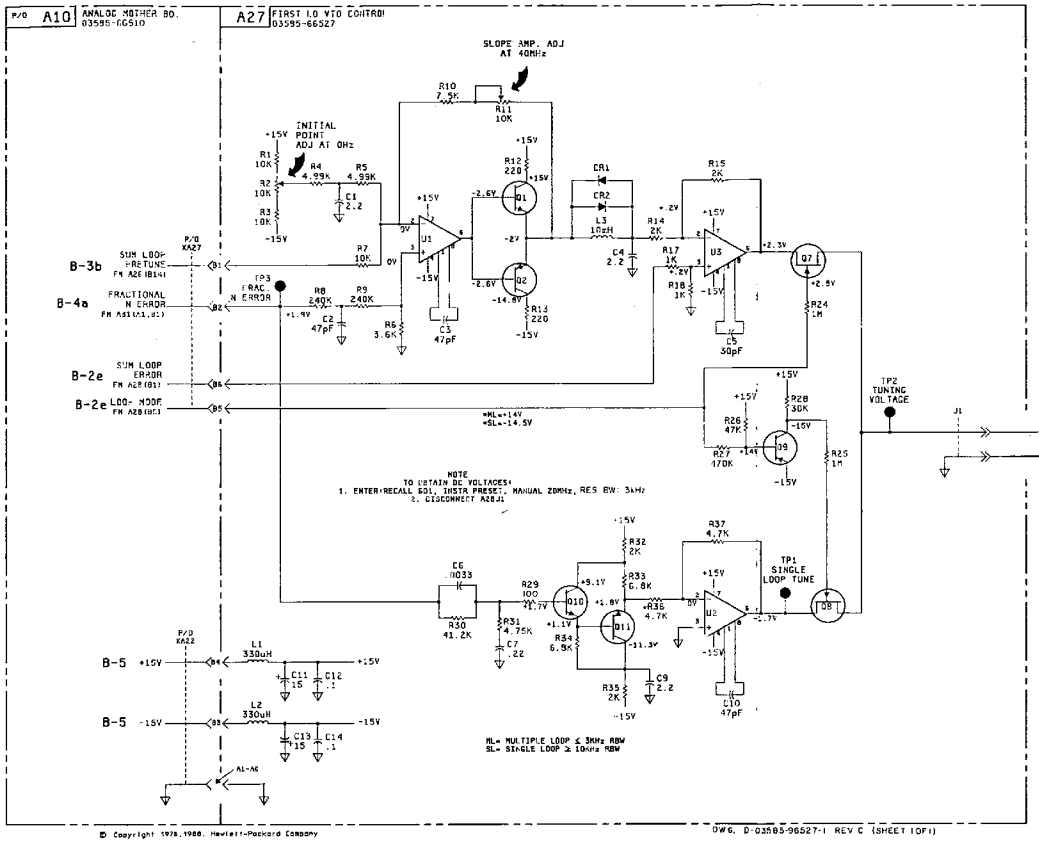


B-2d

Figure 10-14. First LO VTO Control (66527)

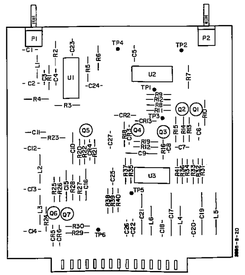

A28
03585-66528

NOTE

Set up conditions for waveforms 1 through 6:

1. Enter:
Shift 601
Instr Preset
Save 5
Res BW 3kHz
Manual Frequency
650kHz

2. Connect A31 J4 to A28 J2.

3. Connect a synthesizer 50Ω output to A28 J1.

4. Set the synthesizer for 2.9999MHz, +4dBm.

5. By varying the frequency of the synthesizer by several hundred Hz, you should be able to obtain the given waveforms.

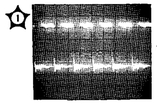

1 — 1V/DIV; 0.2μsec/DIV

2 — 0.2V/DIV; 2msec/DIV

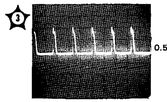

3 — 0.5V/DIV; 0.2μsec/DIV

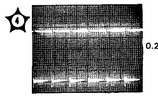

4 — 0.2V/DIV; 0.2μsec/DIV

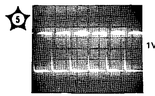

5 — 1V/DIV; 0.2μsec/DIV

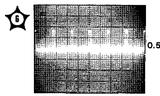

6 — 0.5V/DIV; 0.2μsec/DIV

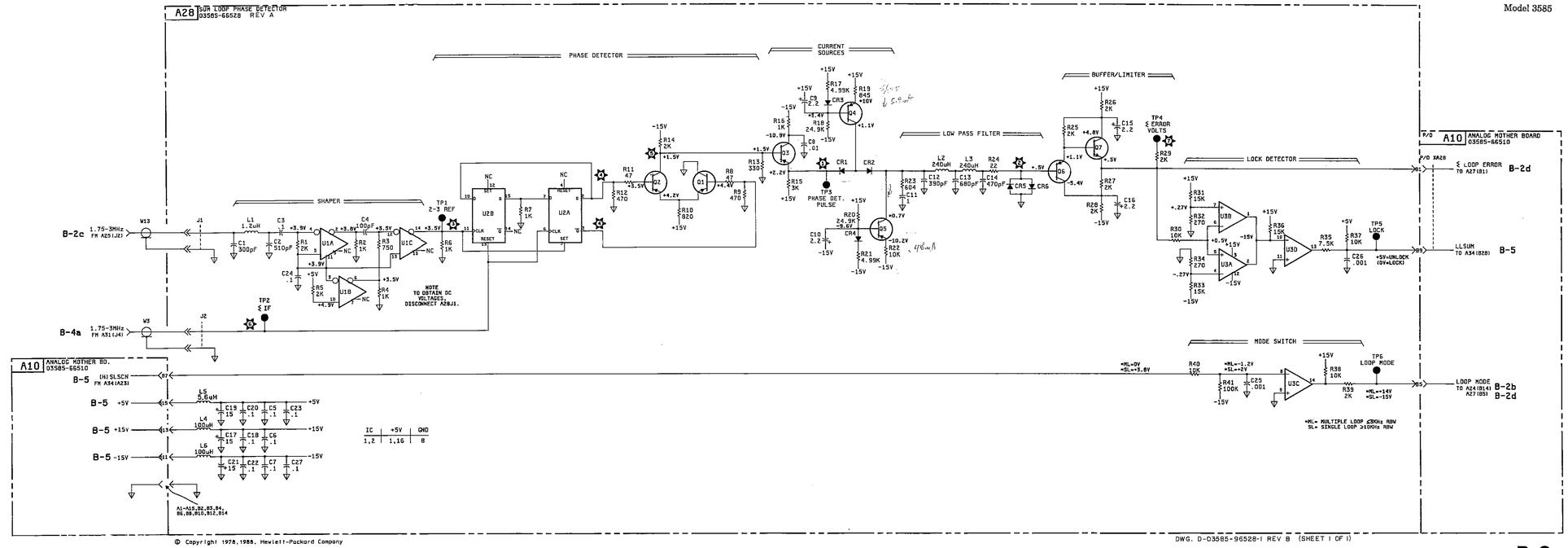




**B-2e**

Figure 10-15. Sum Loop Phase Dectector (66528)

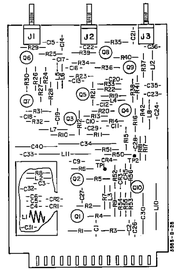

A23
03585-66523

NOTE

Set up conditions for dBm measurements are as follows:

1. Disconnect the cables attached to A23 J1, J2, J3.

2. Ground TP2.

3. Use a 1kΩ, 20:1 divider probe. Read the spectrum analyzer directly. Do not compensate for the 20:1 divider ratio of the probe.

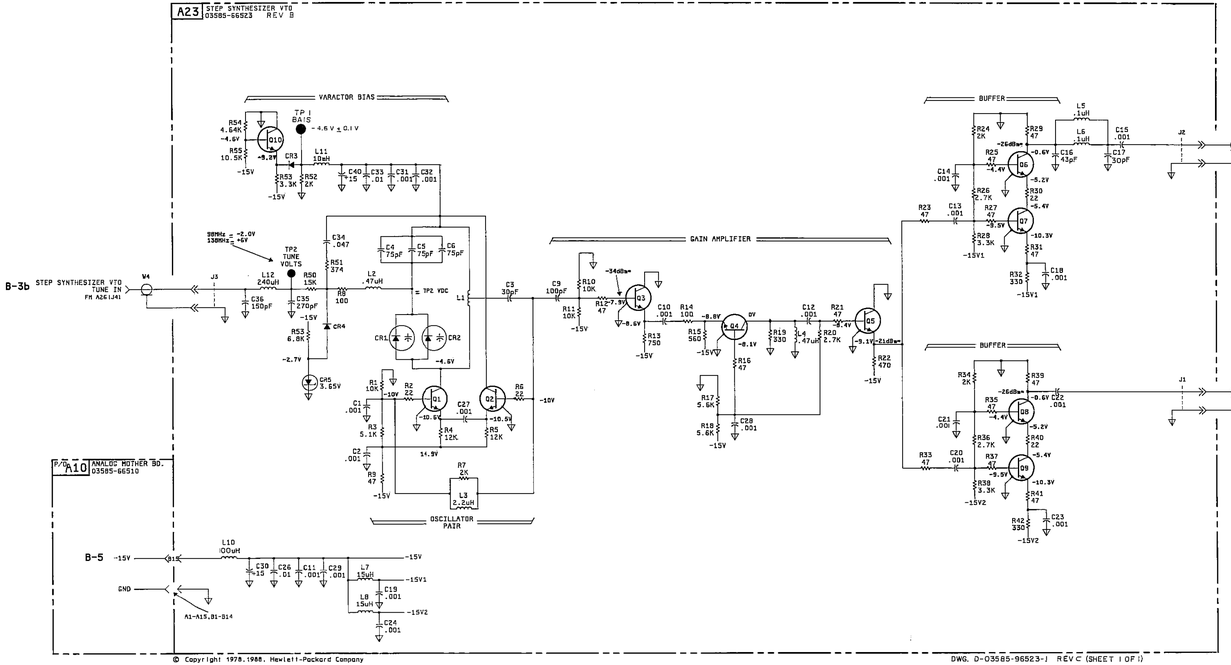


B-3a

Figure 10-16. Step Synthesizer VTO (66523)

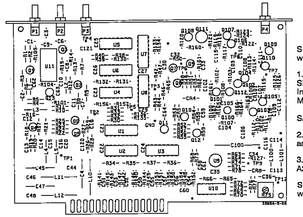

A26
03585-66526

NOTE

Set up conditions for waveforms 1,2,3, and 4:

1. Enter:
SHIFT 601
Instr Preset
Manual Sweep
1.55MHz
Save 5

2. Connect A26 J2 to A22 J1 and A26 J1 to A21 J2.

3. Disconnect the cable at A26-J4.

Set up conditions for waveforms 5, 6, 7, 8 and 9:

1. Do the set up conditions for waveforms 1, 2, 3, 4.

2. Set the synthesizer for 15.0005MHz, +4dBm.

3. Connect the synthesizer 50Ω output to A26 J3.

4. By varying the frequency of the synthesizer by several hundred Hz, you should be able to obtain the waveforms given.

5. For waveforms 7, 8, and 9, unsolder and lift one lead of C100.

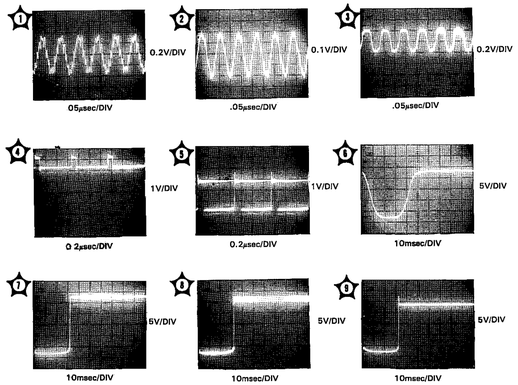


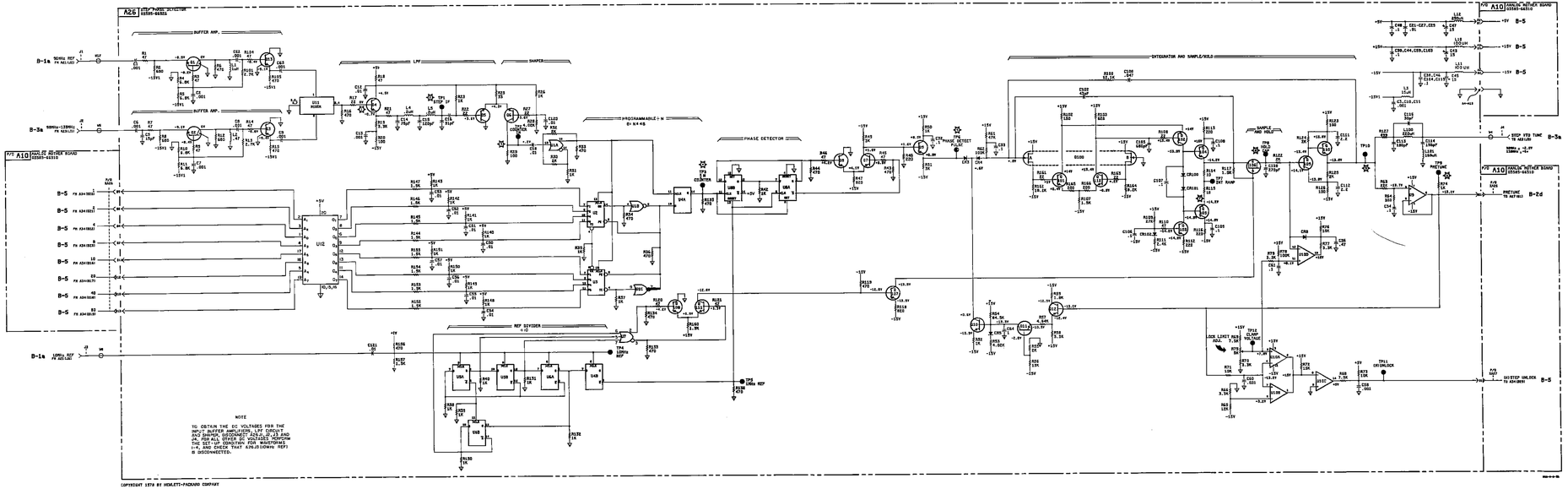


NOTE

TO OBTAIN THE DC VOLTAGES FOR THE INPUT BUFFER AMPLIFIER, LPF CIRCUIT AND SHAPER, DISCONNECT A26-J3 AND A26-J4. FOR ALL OTHER DC POINTS (WAVEFORMS 1-4) AND CHECK THAT 620.25(50MHz REF) IS DISCONNECTED.

**B-3b**

Figure 10-17. Step Phase Detector (66526)

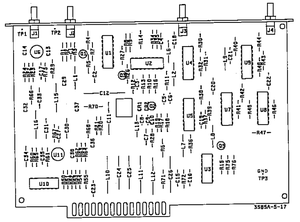

A31
03585-66531

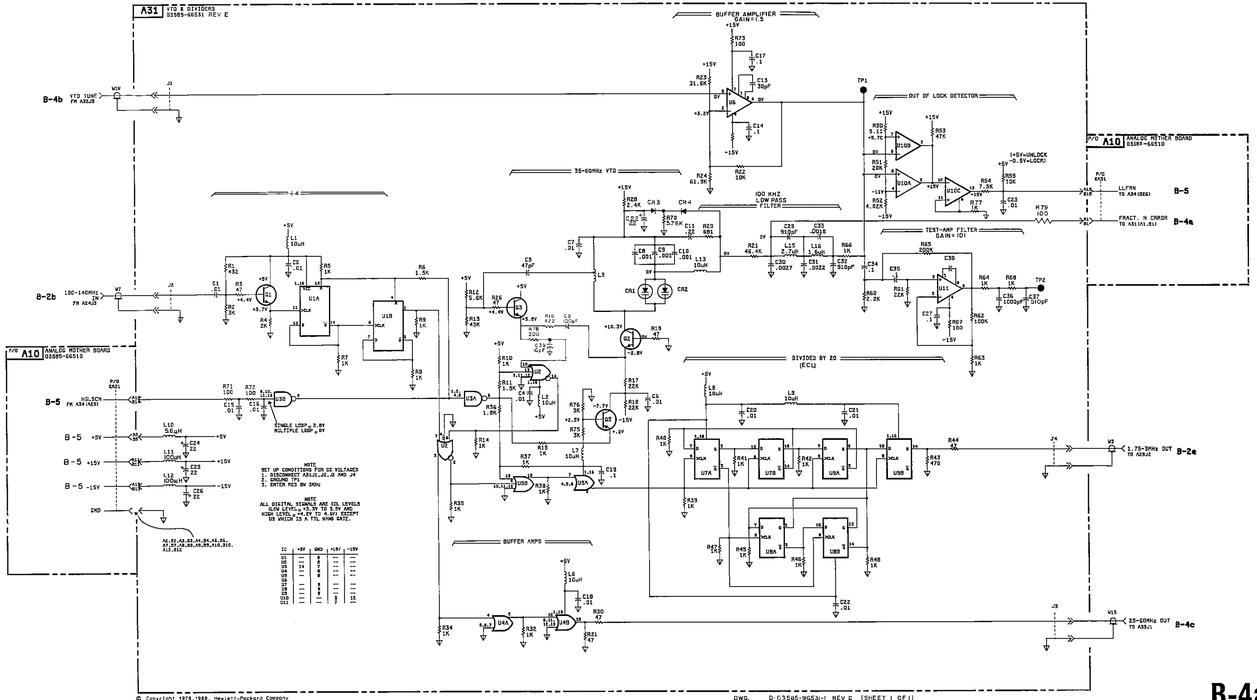


**B-4a**

Figure 10-18. VTO and Dividers (66531)

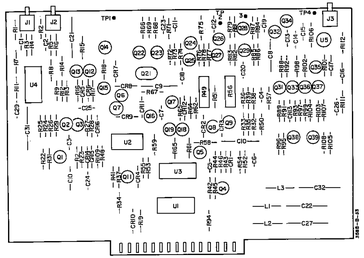

A32
03585-66532

**NOTE**

Set up conditions for waveforms 1, 2, and 3:

1. Disconnect A32J3.
2. Ground A31TP1.
3. Enter
   Shift 601
   Instr Preset
   Manual 450kHz
4. For waveform 3, unsolder one end of C8 or R67.

Set up conditions for waveforms 4, 5, 6, 7, 8, 9, and 10:

1. Connect A32J1, J2, and J3 as normal.
2. Enter:
   Shift 601
   Instr Preset
   Manual 450kHz

Set up conditions for waveforms 11, 12, 13, 14, and 15:

1. Connect A32J1, J2, and J3 as normal.
2. Enter:
   Shift 601
   Instr Preset
   Manual 450, 049Hz

Set up conditions for the DC voltages:

1. Disconnect A32J2 and J3
2. Ground A31TP1.
3. Enter:
   Shift 601
   Instr Preset
   Manual 450kHz

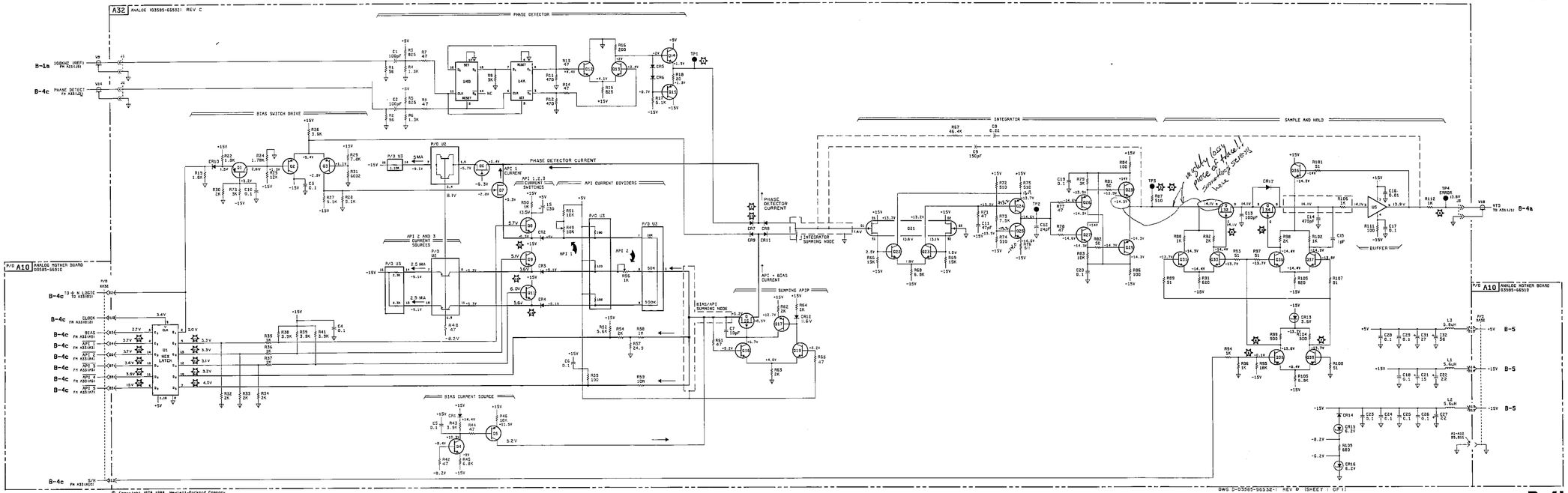




**B-4b**

Figure 10-19. Analog (66532)

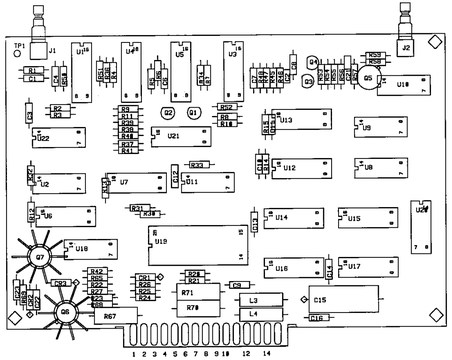

A33
03585-66533

NOTE

Set up conditions for waveform 1:

1. Connect the 10MHz Ref Output of the 3585 to the synthesizer Ref input.

2. Disconnect A33J1 and connect the synthesizer to A33J1 using the BNC-to-Selectro cable.

3. Set the synthesizer for 50MHz, +4dBm.

4. Enter:
Shift 601
Instr Preset
Res BW 3kHz
Manual 650kHz

5. You may have to increase the oscilloscope intensity to observe the waveform.

R12 DETAIL

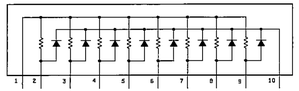

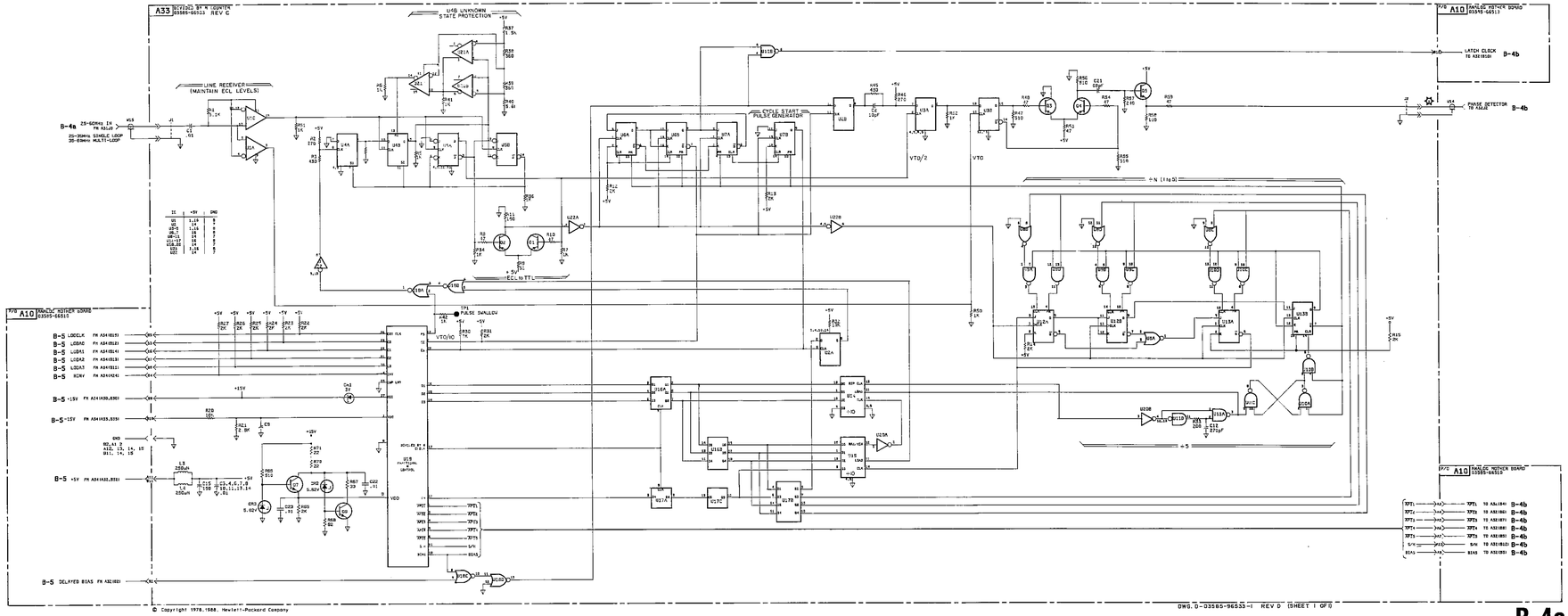

© Copyright 1978, 1980, Hewlett-Packard Company

DWG. D-03585-96533-1 REV D (SHEET 1 OF 1)

**B-4c**

Figure 10-20. Divided By N Counter (66533)

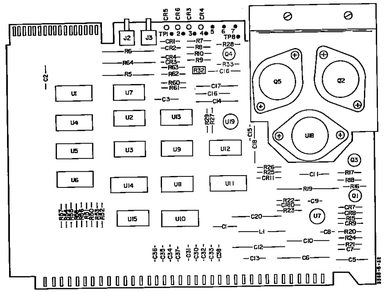

A34
03585-66534

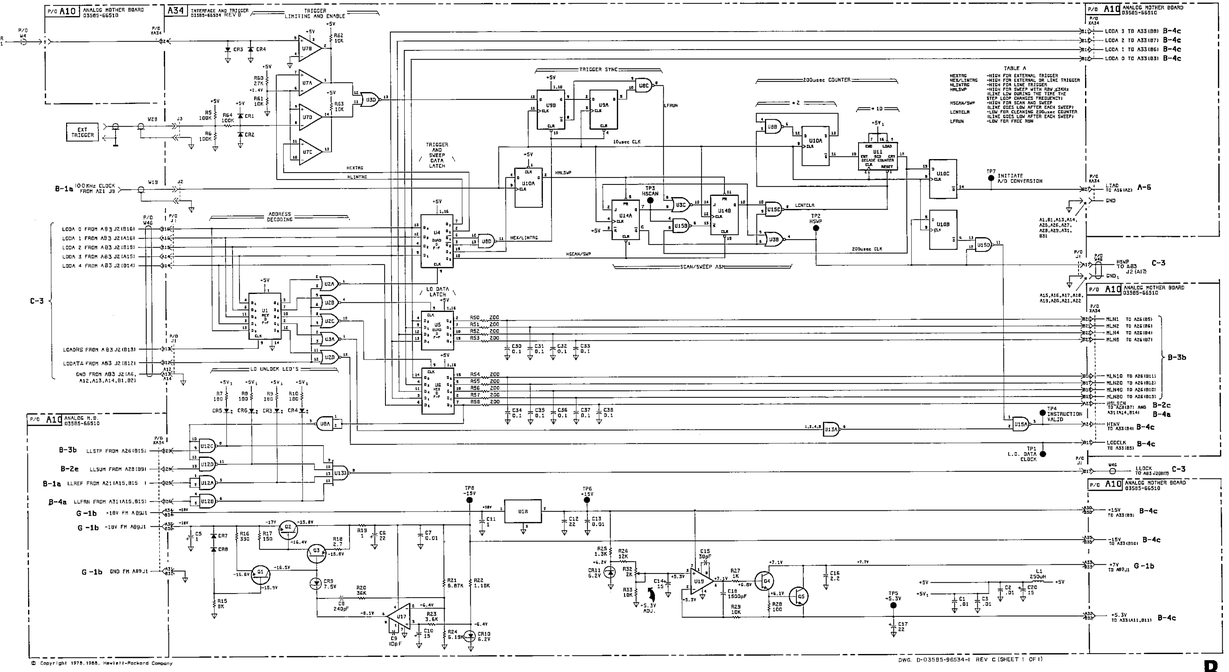


| IC | +5V | GND |
|---|---|---|
| 1 | 1,16 | 8 |
| 2 | 14 | 7 |
| 3 | 14 | 7 |
| 4 | 1,16 | 8 |
| 5 | 1,16 | 8 |
| 6 | 1,16 | 8 |
| 7 | 14 | 7 |
| 8 | 14 | 7 |
| 9 | 1,10,14 | 7 |
| 10 | 16 | 8 |
| 11 | 14 | 7 |
| 12 | 14 | 7 |
| 13 | 14 | 7 |
| 14 | 16 | 8 |
| 15 | 14 | 7 |

**B-5**

Figure 10-21. Interface And Trigger (66534)

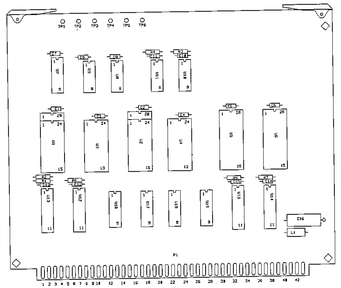

A49
03585-66549

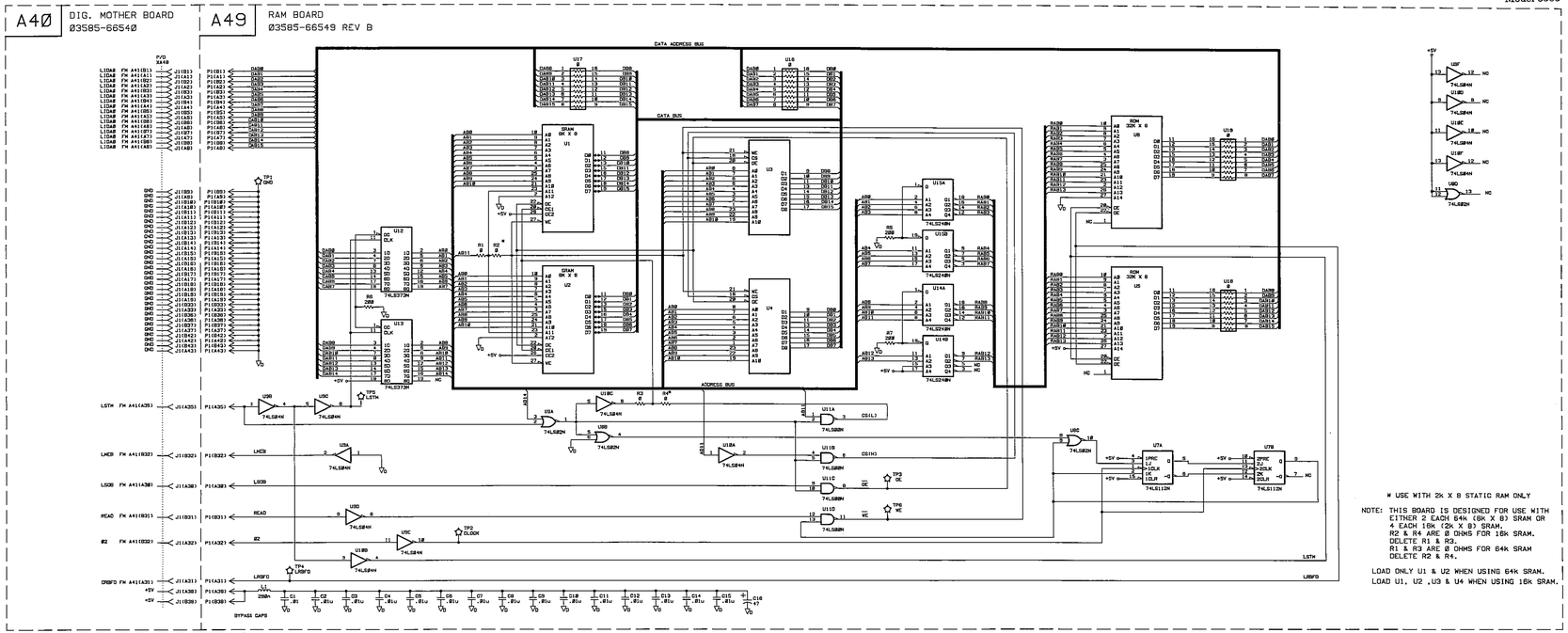


* USE WITH 2K X 8 STATIC RAM ONLY

NOTE: THIS BOARD IS DESIGNED FOR USE WITH
EITHER 2 EACH 64K (8K X 8) SRAM OR
4 EACH 16K (2K X 8) SRAM.
R2 & R4 ARE 0 OHMS FOR 16K SRAM.
DELETE R1 & R3.
R1 & R3 ARE 0 OHMS FOR 64K SRAM
DELETE R2 & R4.

LOAD ONLY U1 & U2 WHEN USING 64K SRAM.
LOAD U1, U2 ,U3 & U4 WHEN USING 16K SRAM.



Figure 10-22. RAM Board (66549), Rev B.
10-49/10-50

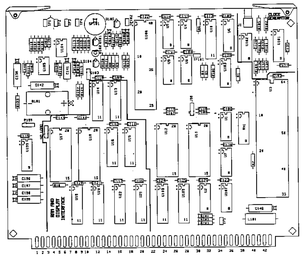


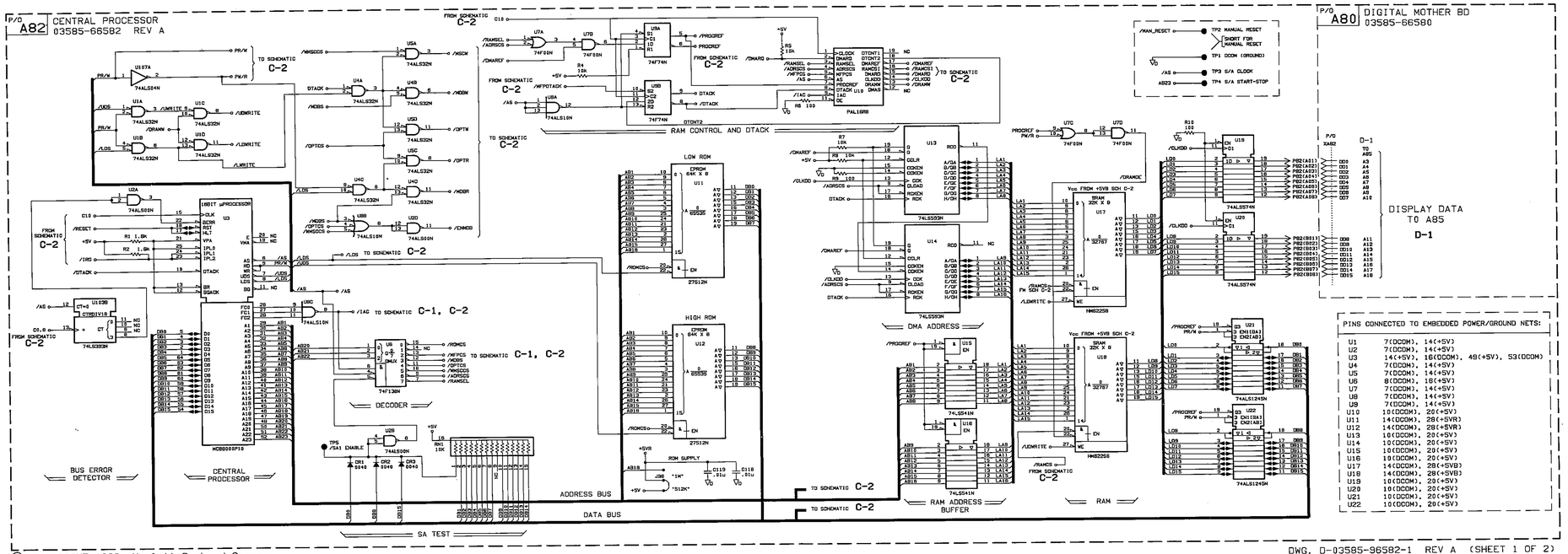




DWG. D-03585-96582-1 REV A (SHEET 1 OF 2)

**C-2a** C-1

Figure 10-23 Central Processor (66582)

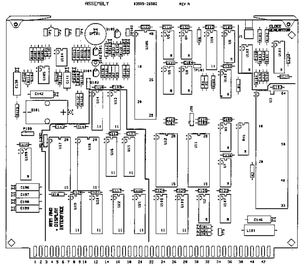

A82
03585-66582

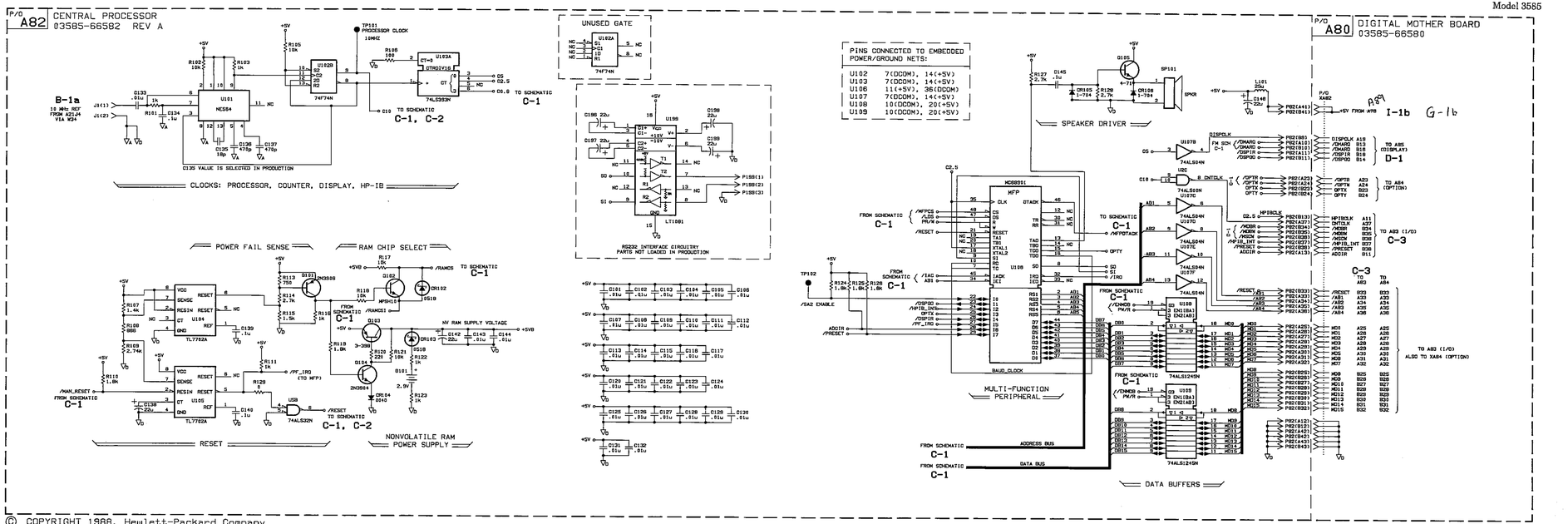




DWG. D-03585-96582-1 REV A (SHEET 2 OF 2)

C-2b C-2

Figure 10-23 Central Processor Support Circuits (66582)

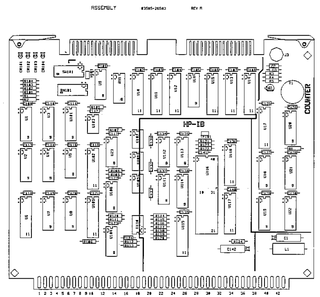


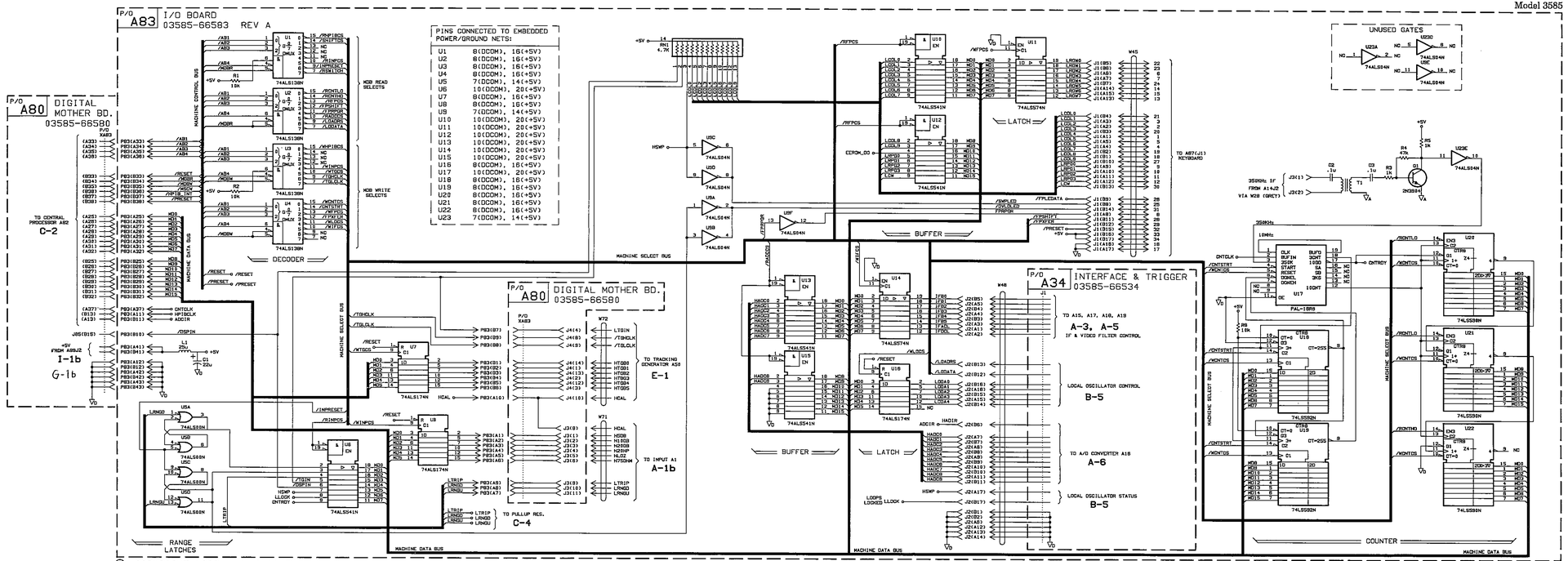


PINS CONNECTED TO EMBEDDED POWER/GROUND NETS:

| | |
|---|---|
| U1 | 8(DCOM), 16(+5V) |
| U2 | 8(DCOM), 16(+5V) |
| U3 | 8(DCOM), 16(+5V) |
| U4 | 8(DCOM), 16(+5V) |
| U5 | 7(DCOM), 14(+5V) |
| U6 | 10(DCOM), 20(+5V) |
| U7 | 8(DCOM), 16(+5V) |
| U8 | 8(DCOM), 16(+5V) |
| U9 | 7(DCOM), 14(+5V) |
| U10 | 10(DCOM), 20(+5V) |
| U11 | 10(DCOM), 20(+5V) |
| U12 | 10(DCOM), 20(+5V) |
| U13 | 10(DCOM), 20(+5V) |
| U14 | 10(DCOM), 20(+5V) |
| U15 | 10(DCOM), 20(+5V) |
| U16 | 8(DCOM), 16(+5V) |
| U17 | 10(DCOM), 20(+5V) |
| U18 | 8(DCOM), 16(+5V) |
| U19 | 8(DCOM), 16(+5V) |
| U20 | 8(DCOM), 16(+5V) |
| U21 | 8(DCOM), 16(+5V) |
| U22 | 8(DCOM), 16(+5V) |
| U23 | 7(DCOM), 14(+5V) |



DWG. D-03585-66583-1 REV A (SHEET 1 OF 2)



Figure 10-24. I/O Board (66583)

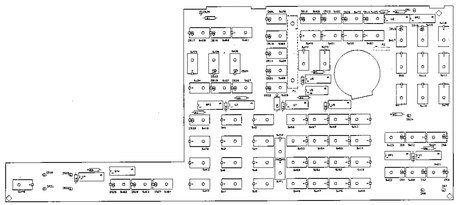

A87
03585-66587

A87 KEYBOARD
03585-66587 REV A

DATA LATCHES AND LED FRONT PANEL

| PINS CONNECTED TO EMBEDDED POWER/GROUND NETS: | |
|---|---|
| U1 | 8(DCOM), 16(+5V) |
| U2 | 8(DCOM), 16(+5V) |
| U3 | 8(DCOM), 16(+5V) |
| U4 | 8(DCOM), 16(+5V) |
| U5 | 7(DCOM), 14(+5V) |
| U6 | 8(DCOM), 16(+5V) |
| U7 | 7(DCOM), 14(+5V) |
| U8 | 7(DCOM), 14(+5V) |

RPG COUNT GENERATOR

BUFFERS

FRONT PANEL SWITCHES

DWG. D-03585-66587-1 REV A (SHEET 1 OF 1)



C-4

Figure 10-25. Keyboard (66587)

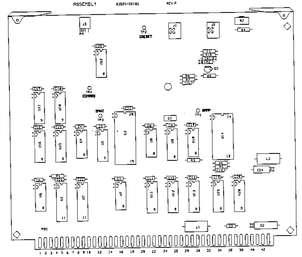

A85
03585-66585

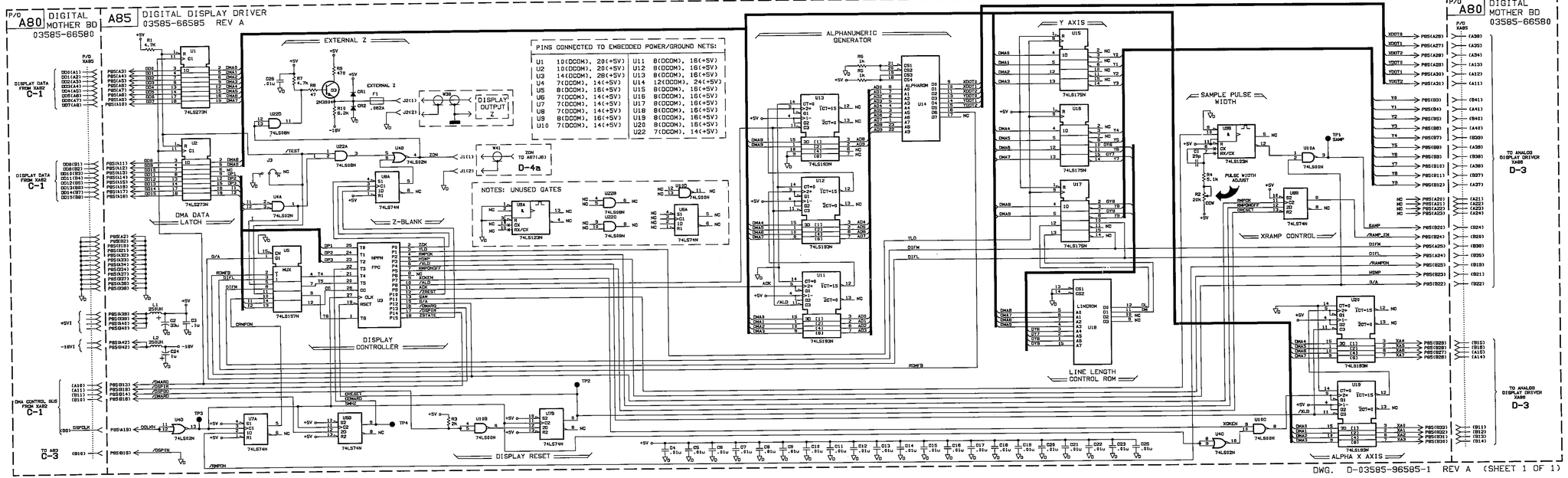




**D-1**

Figure 10-26. Digital Display Driver (66585)

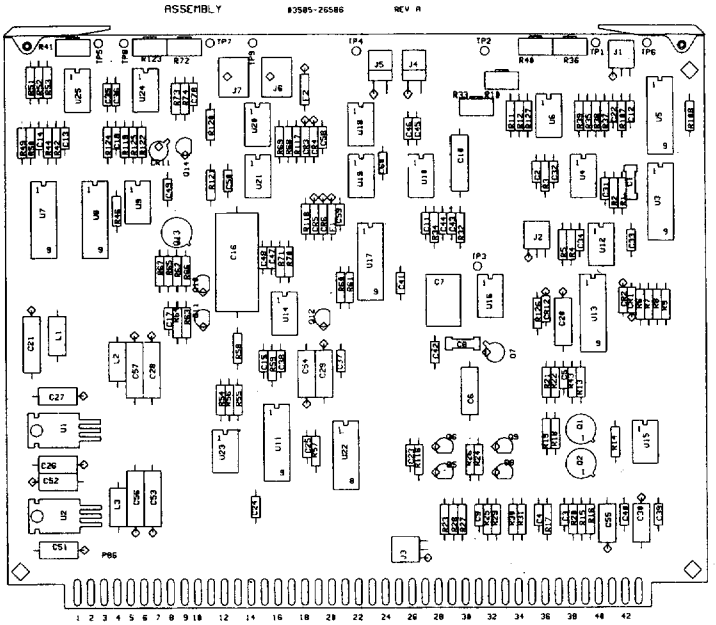


A86
03585-66586

**NOTE**

Set up conditions for waveforms 1 through 16:

1. Place A63J3 in test mode.
2. For waveform 8, place A64J2 in test mode.

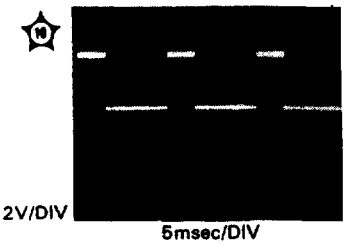


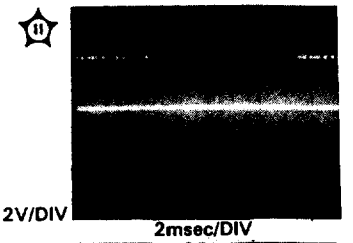


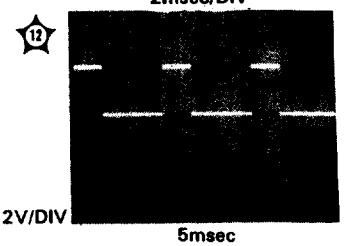


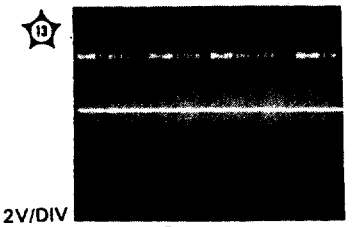


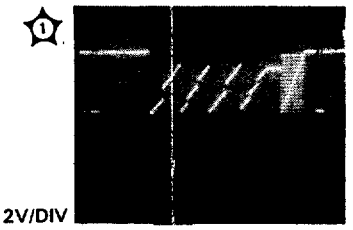



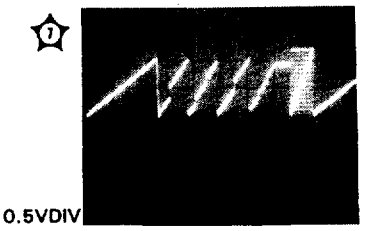


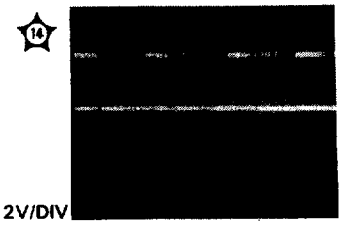


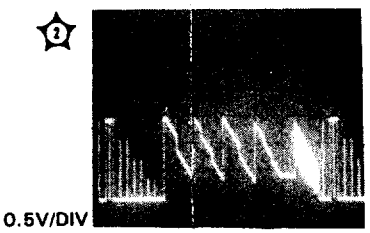


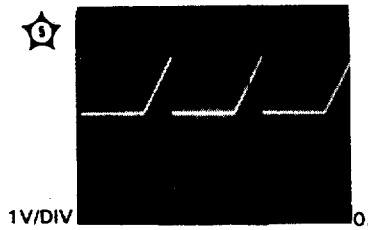


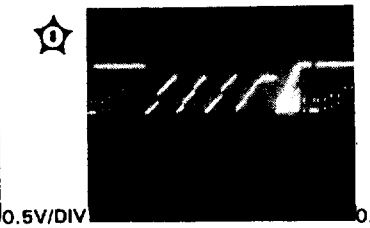


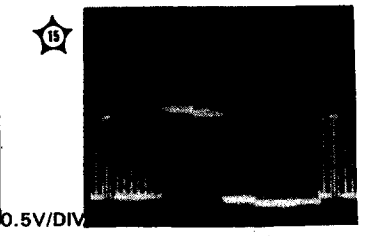


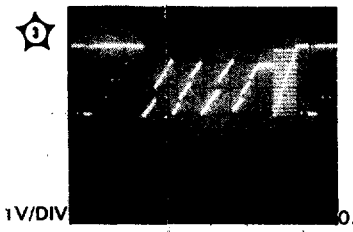


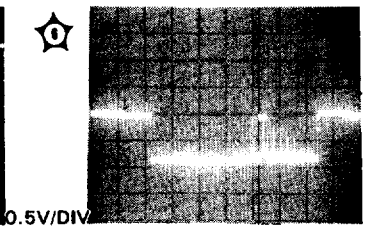


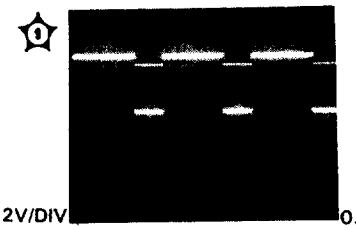


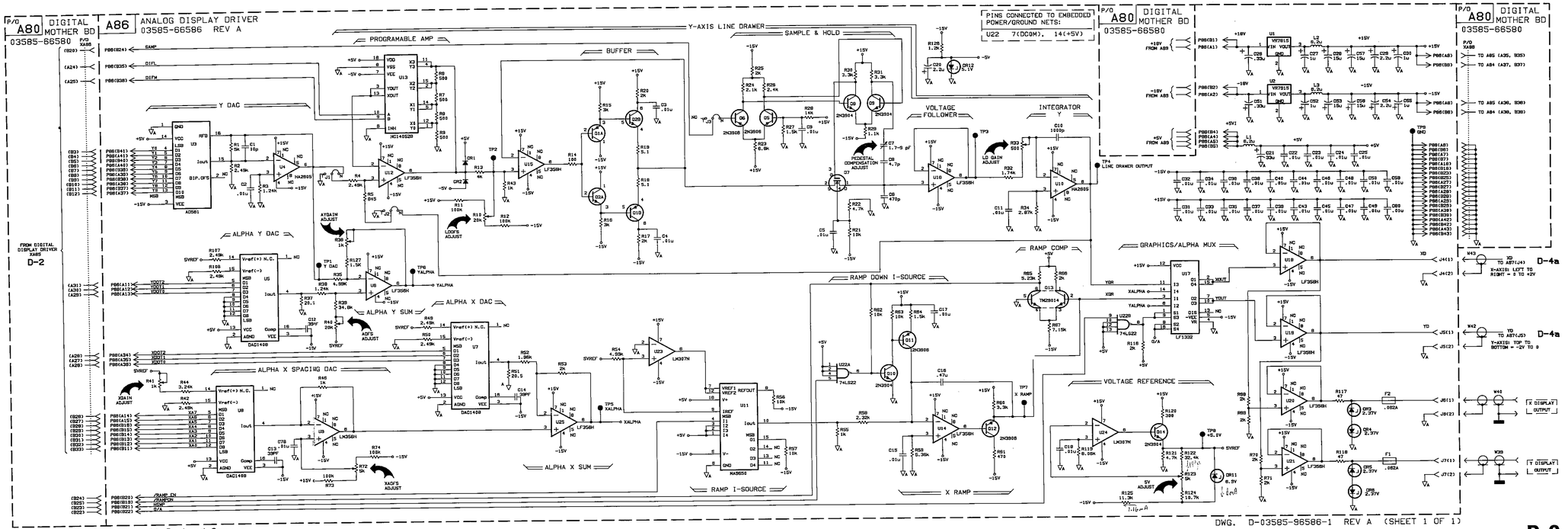




**D-2**

Figure 10-27. Analog Display Driver (66586)

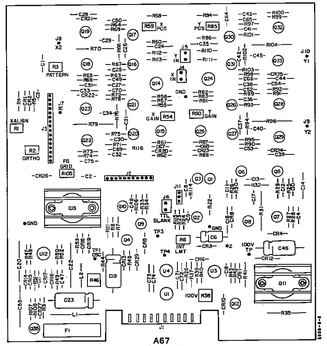

A67
03585-66567

**NOTE**

To obtain the DC voltages and AC Waveforms, place A63J3 in test position and the front panel Intensity knob at the 12:00 clock position.

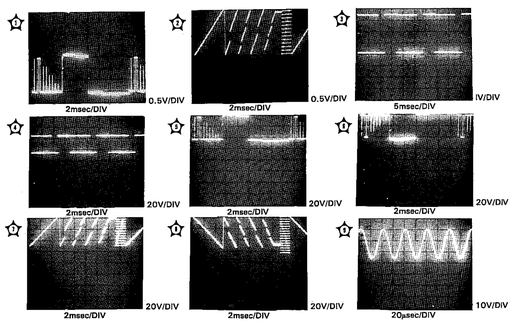


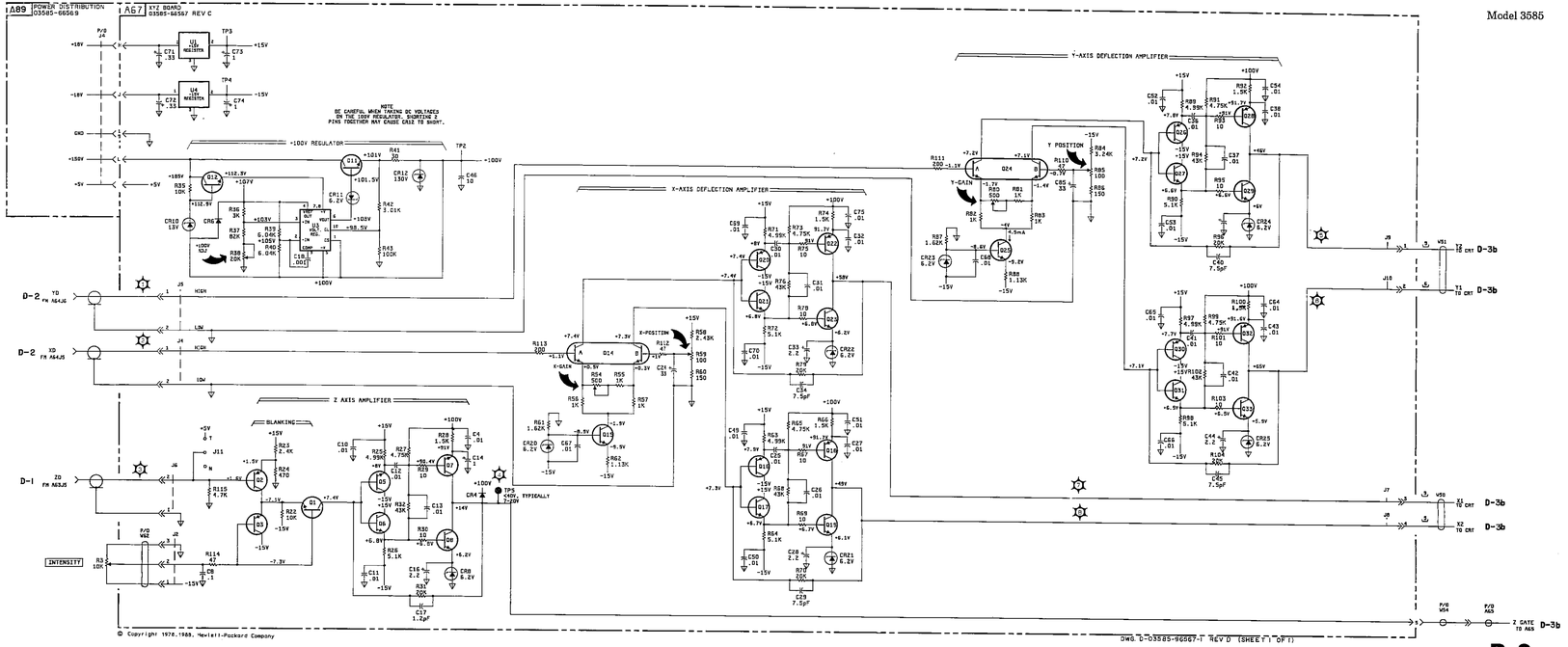


Figure 10-28. XYZ Board (66567)

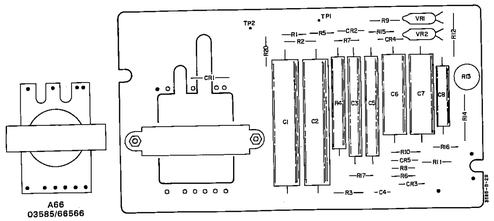


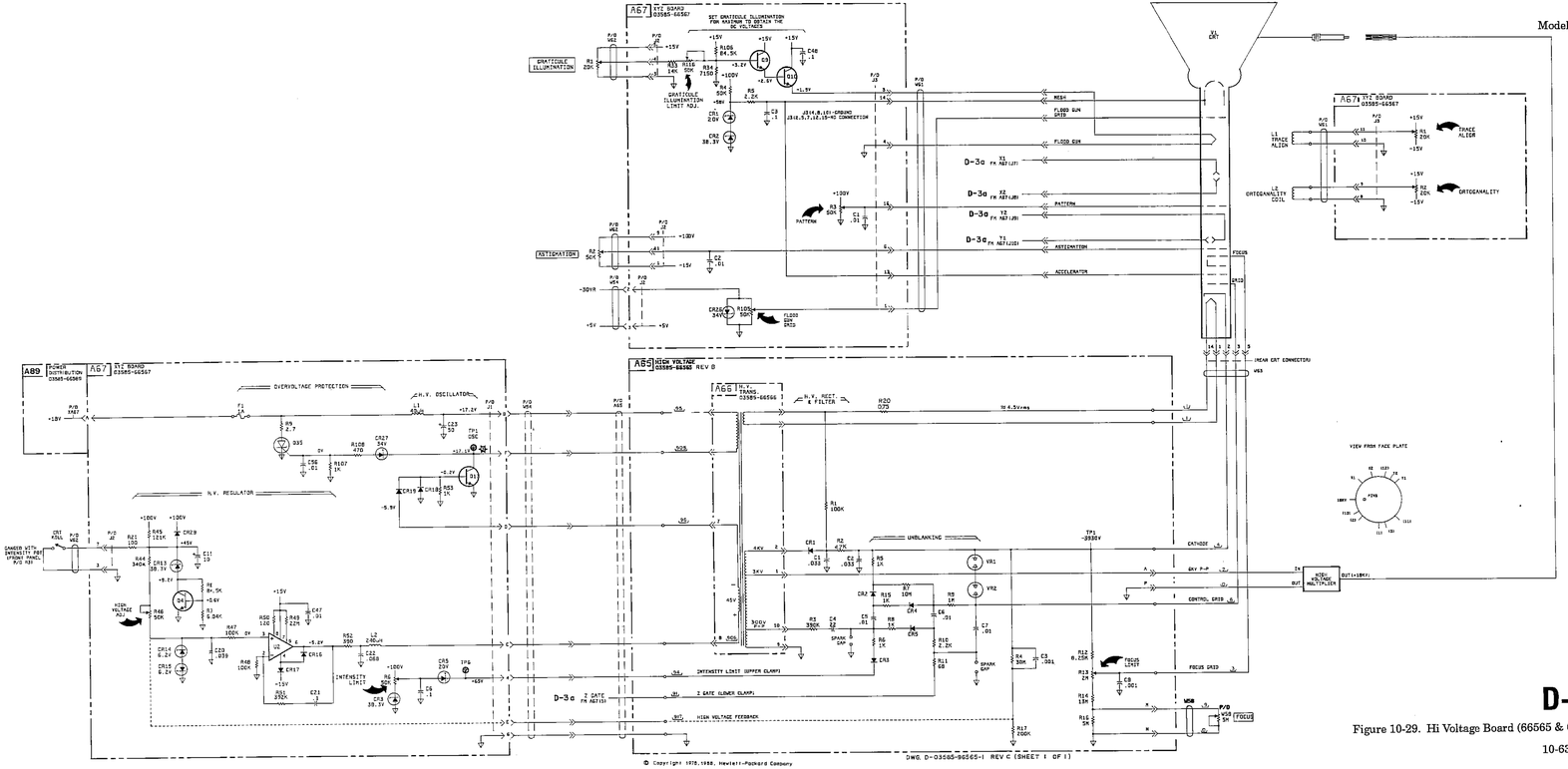




**D-3b**

Figure 10-29. Hi Voltage Board (66565 & 66566)

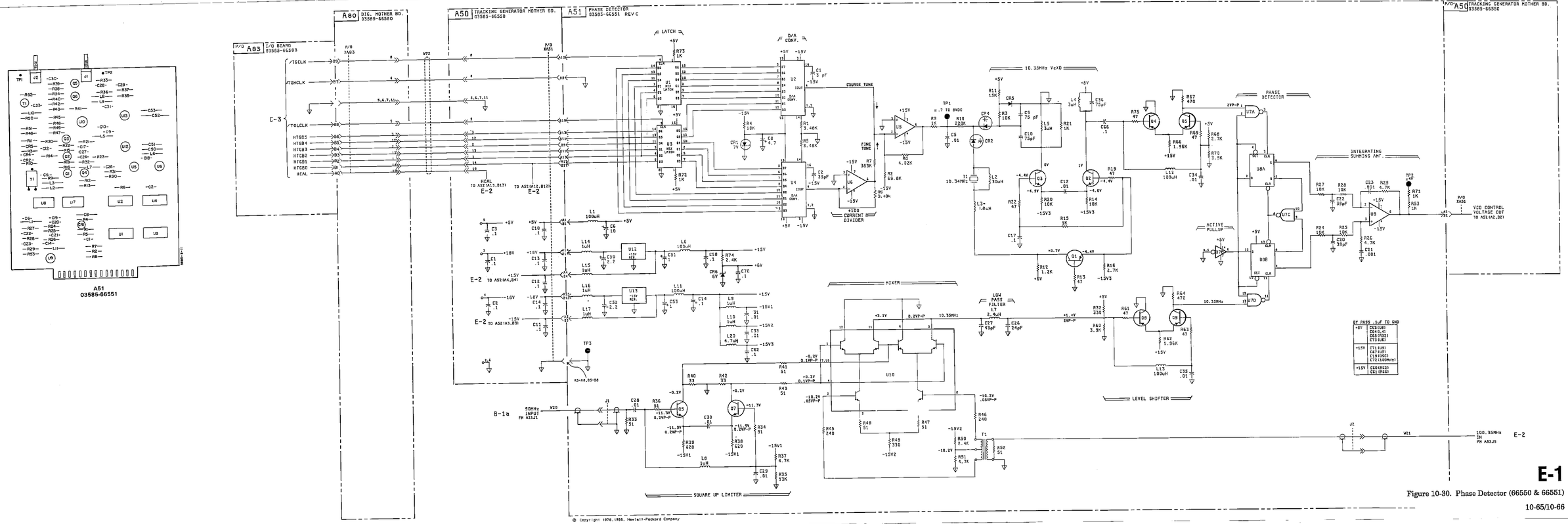


A51
03585-66551



**E-1**

Figure 10-30. Phase Detector (66550 & 66551)

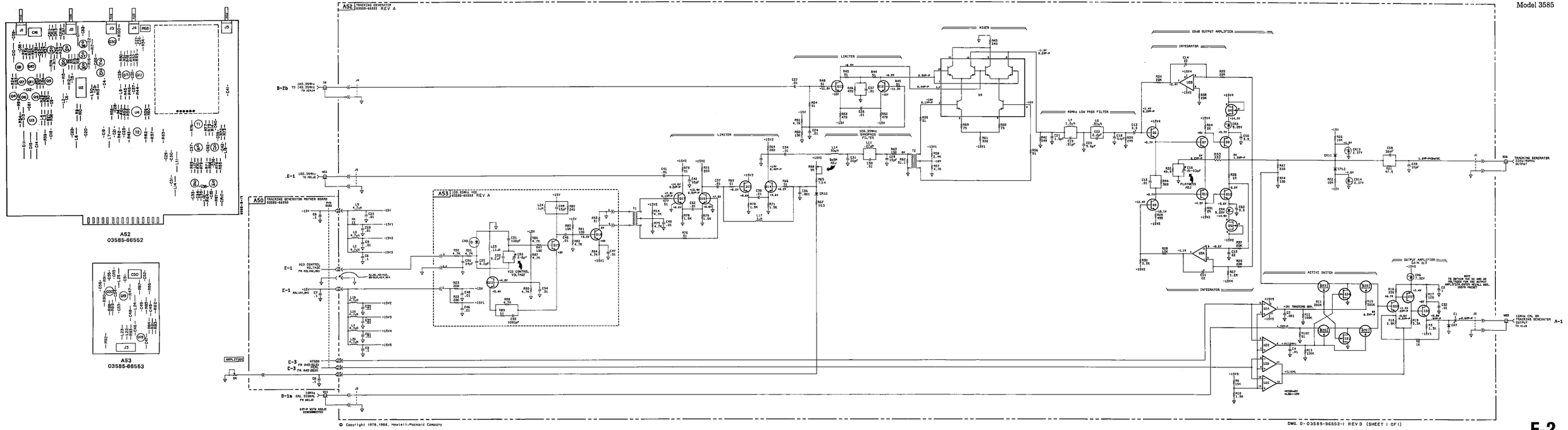






Figure 10-31. Tracking Generator/100.35 MHz VCO (66552 & 66553)

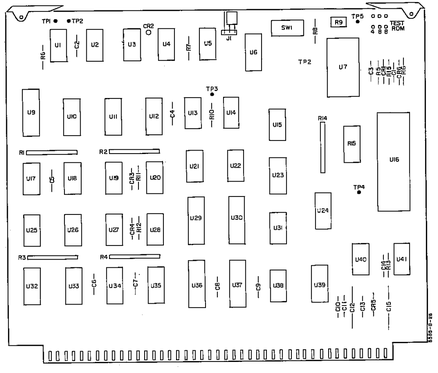

A83
03585-66583

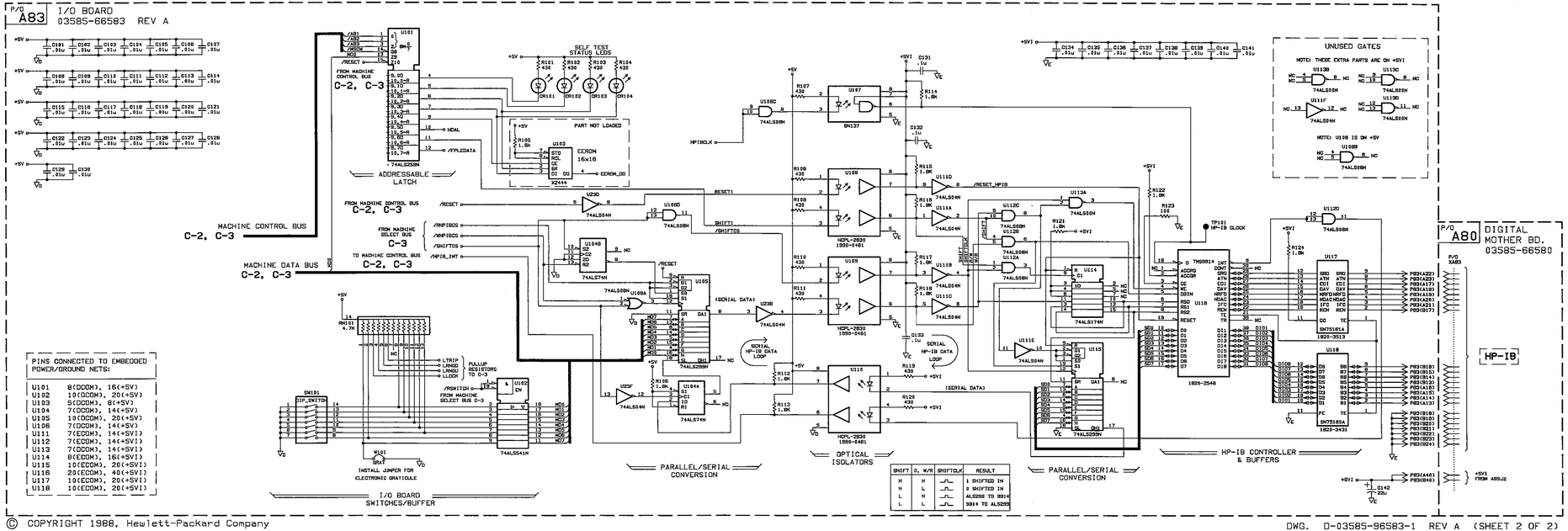


F

Figure 10-32. HP-IB Interface (66583)

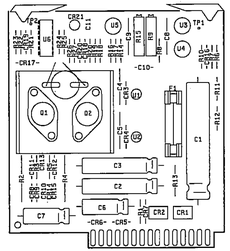


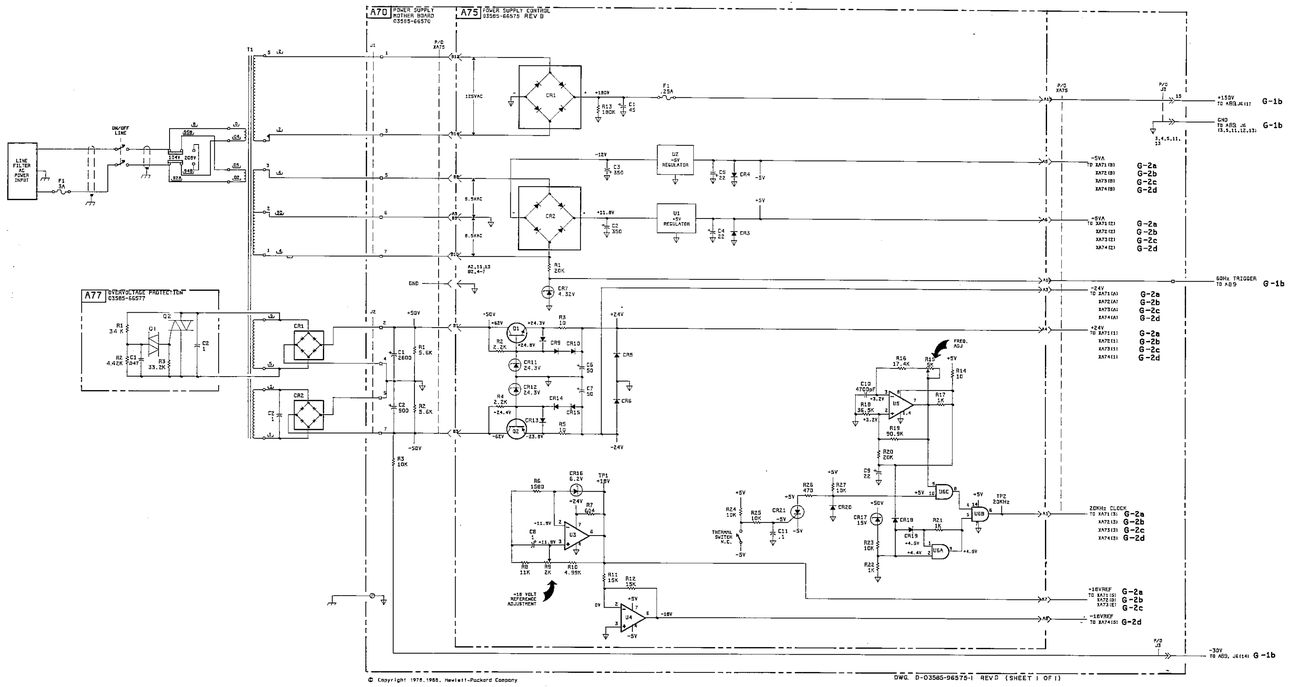


# G-1a

Figure 10-33. Power Supply Control (66575)

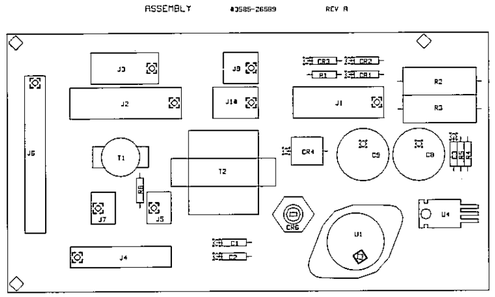


A89
03585-66589

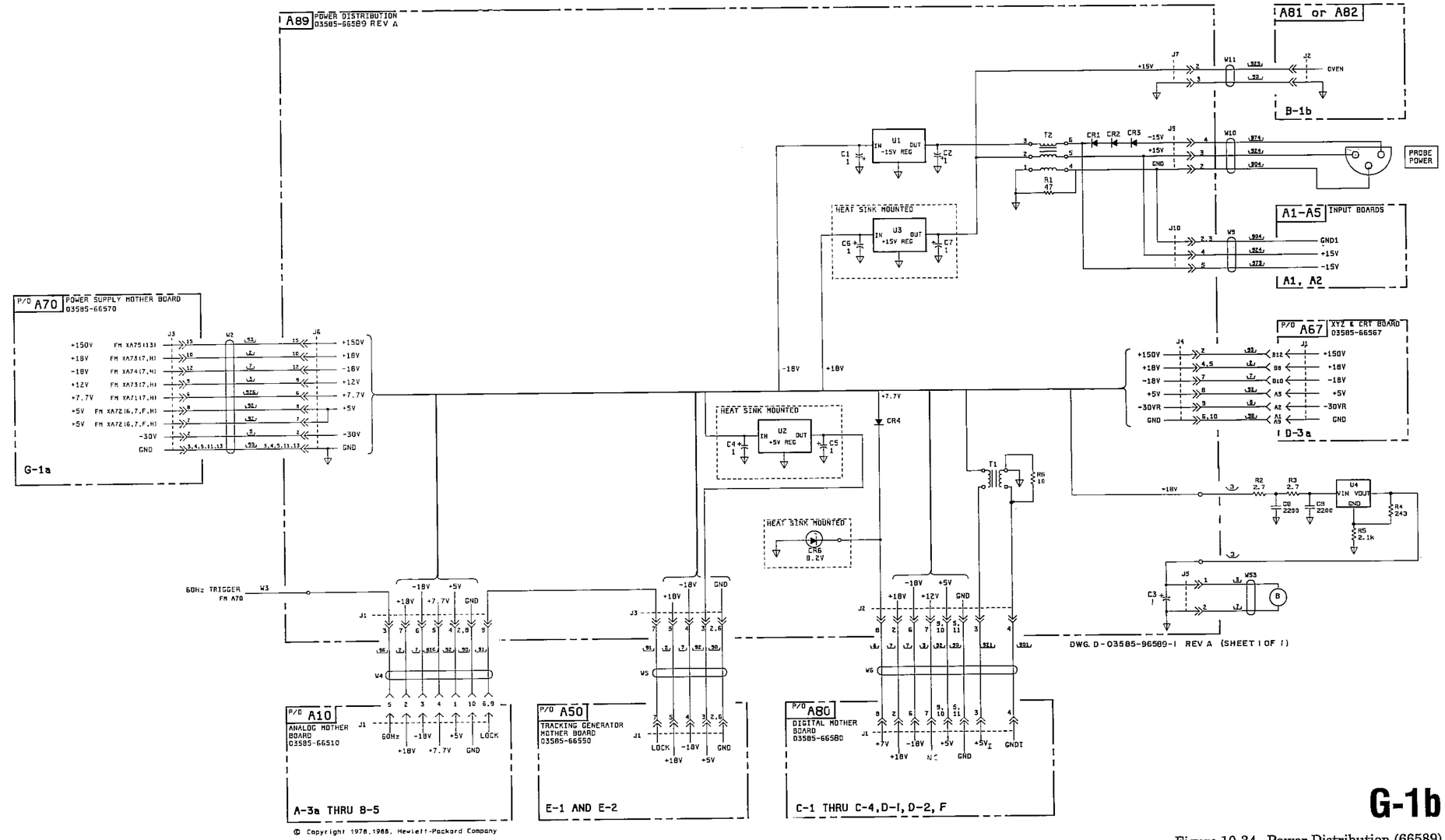




**G-1b**

Figure 10-34. Power Distribution (66589)

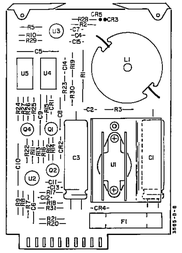

A71
03585-66571

**NOTE**

For waveform 3, the amplitude of the pulses may vary between the two extremes illustrated.

To obtain the DC voltages and AC waveforms, remove U1 and place a 1000, 5%, 1/4 watt resistor across pins 3 and 4 of U1. Before replacing U1, discharge C1 and C3 to prevent permanent damage to U1.

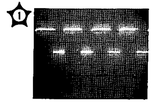

2V/DIV
20μsec/DIV

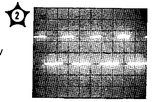

1V/DIV
20μsec/DIV

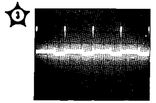

2V/DIV
20μsec/DIV

0.2V/DIV
20μsec/DIV

1V/DIV
20μsec/DIV

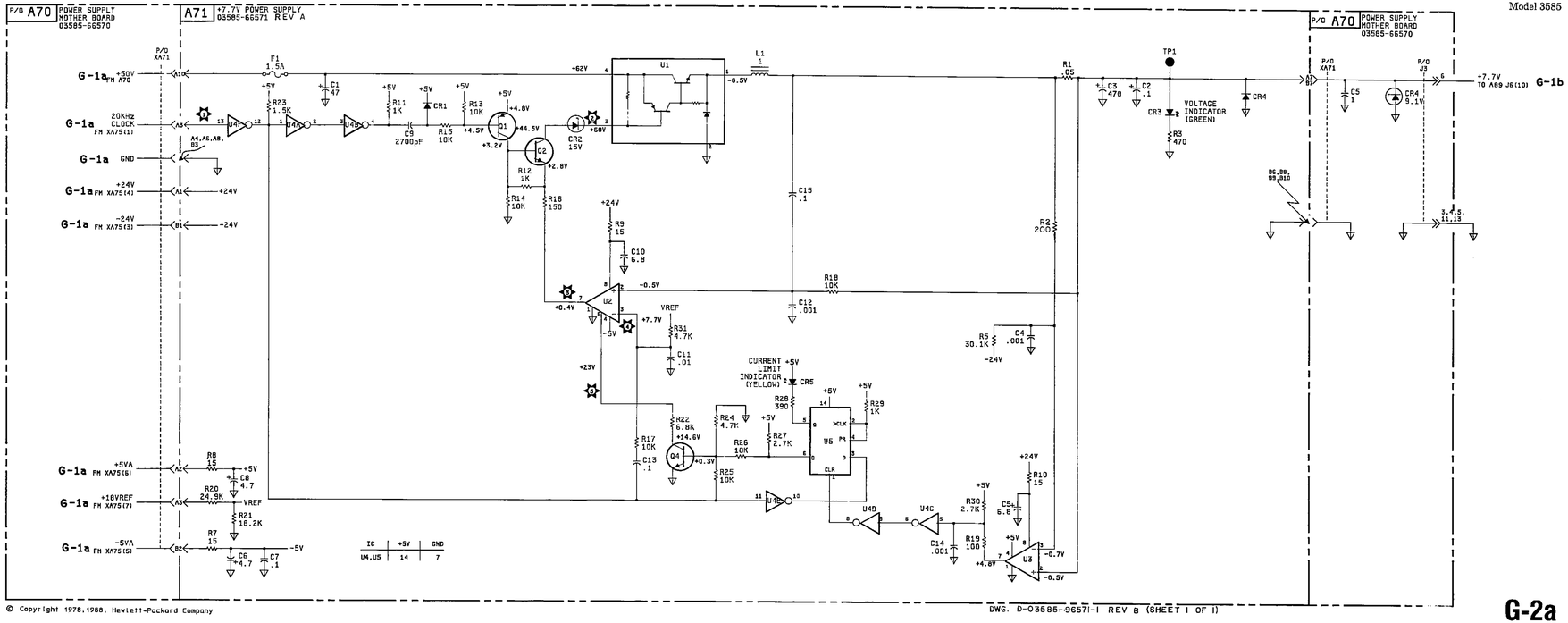




**G-2a**

Figure 10-35. +7.7V Power Supply (66571)

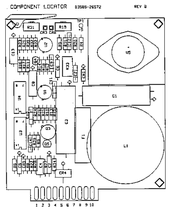


**NOTE**

For waveform 3, the amplitude of the pulses may vary.

To obtain the DC voltages and AC waveforms, remove U5 and replace a 1000, 5%, 1/4 watt resistor across pins 3 and 4 of U5. Before replacing U5, discharge C1 and C3 to prevent permanent damage to U5.

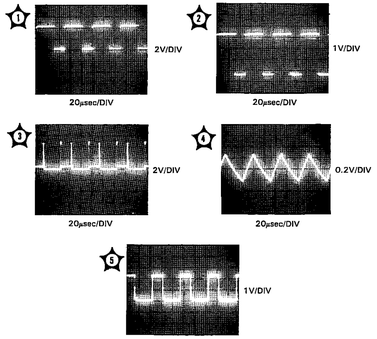


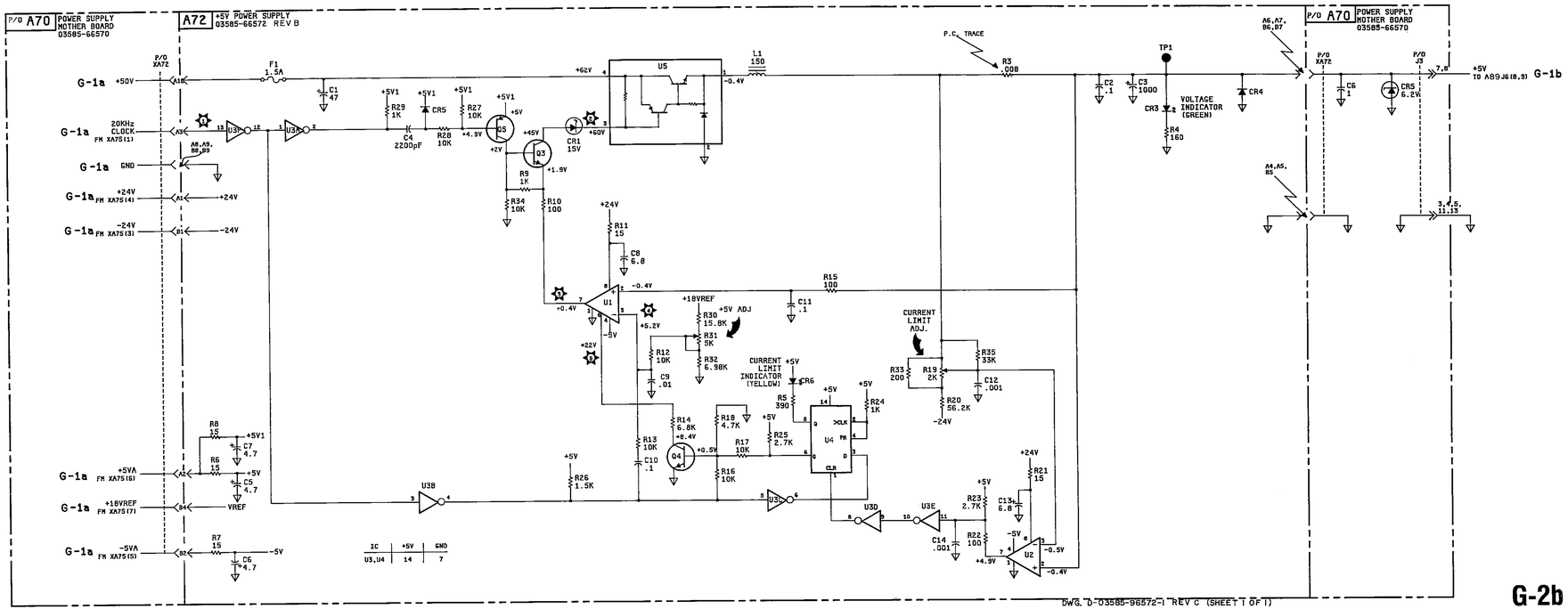






Figure 10-36. +5V Power Supply (66572)

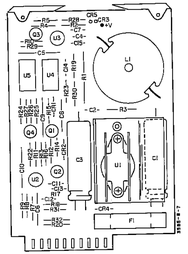

A73
03585-66573

**NOTE**

For waveform 3, the amplitude of the pulses may vary between the two extremes illustrated.

To obtain the DC voltages and AC waveforms, remove U1 and place a 100Ω, 5%, 1/4 watt resistor across pins 3 and 4 of U1. Before replacing U1, discharge C1 and C3 to prevent permanent damage to U1.

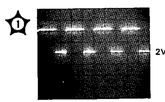

1 — 2V/DIV — 20μsec/DIV

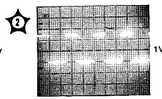

2 — 1V/DIV — 20μsec/DIV

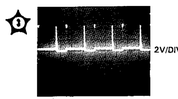

3 — 2V/DIV — 20μsec/DIV

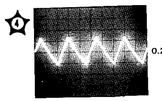

4 — 0.2V/DIV — 20μsec/DIV

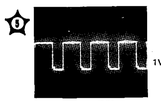

5 — 1V/DIV — 20μsec/DIV

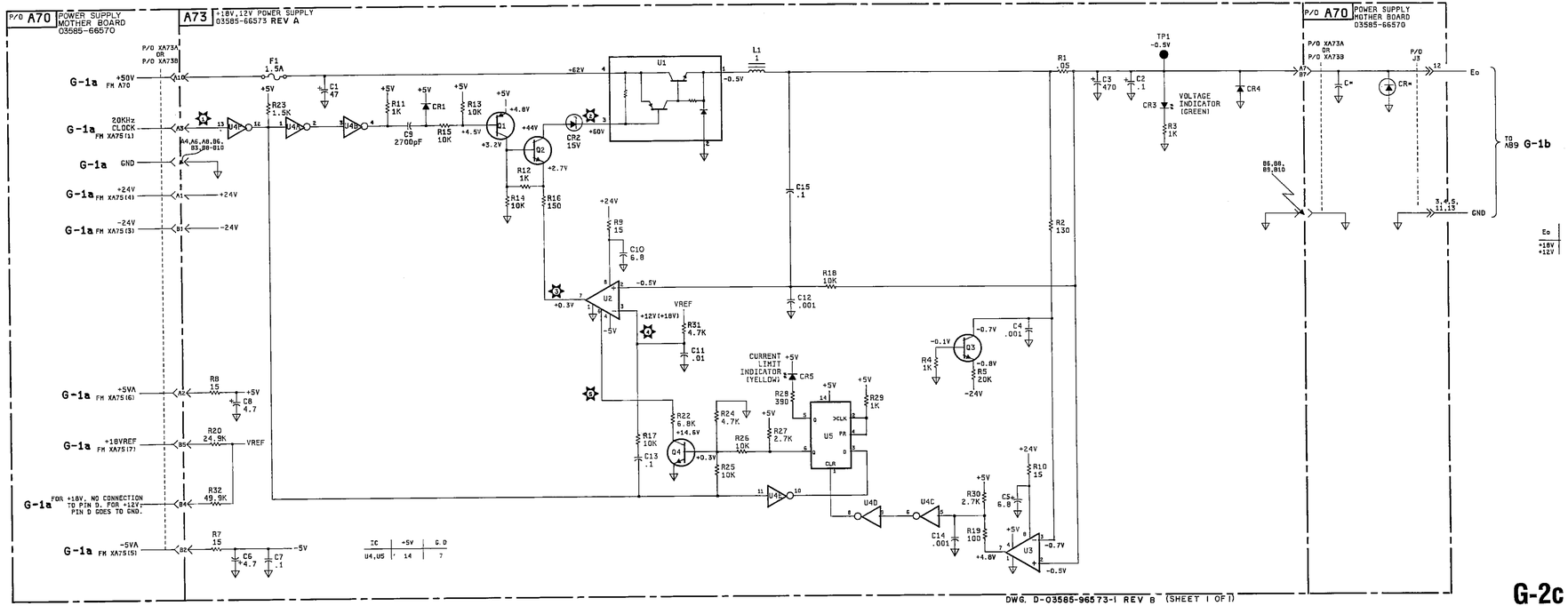






Figure 10-37. +18V Power Supply (66573)

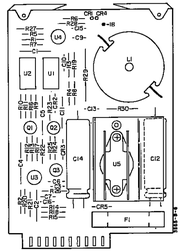

A74
03585-66574

**NOTE**

To obtain the DC voltages and AC waveforms, remove U5 and place a 1000, 5%, 1/4 watt resistor across pins 3 and 4 of U5. Before replacing U5, discharge C12 and C14 to prevent permanent damage to U5.

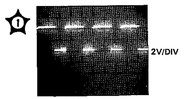

1 — 2V/DIV; 20μsec/DIV

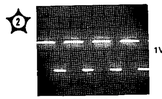

2 — 1V/DIV; 20μsec/DIV

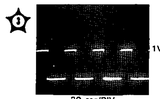

3 — 1V/DIV; 20μsec/DIV

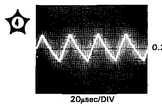

4 — 0.2V/DIV; 20μsec/DIV

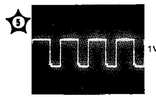

5 — 1V/DIV; 20μsec/DIV

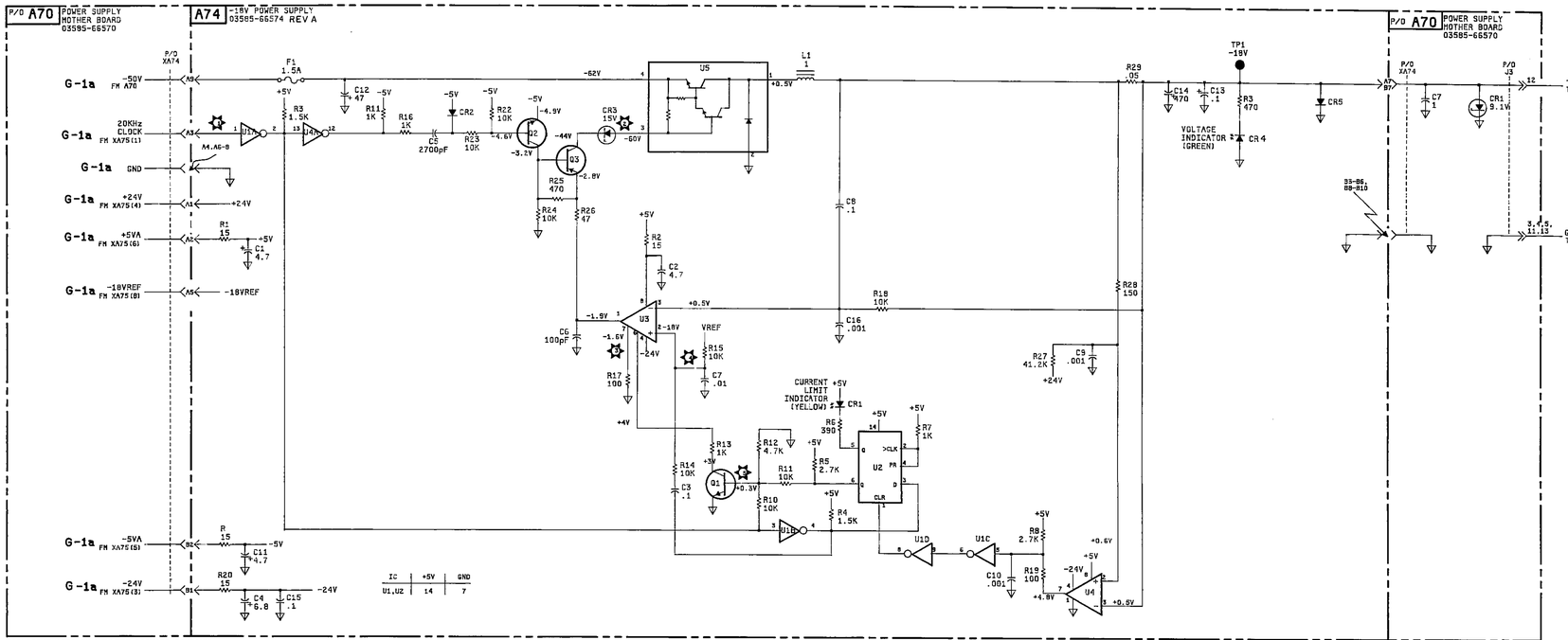


G-2d

Figure 10-38. −18V Power Supply (66574)

HEWLETT PACKARD

# SERVICE MANUAL

# MODEL 3585 SPECTRUM ANALYZER

**Serial Numbers: prefix 2824A and greater**

**WARNING**

*To help minimize the possibility of electrical fire or shock hazards, do not expose this instrument to rain or excessive moisture.*

## VOLUME II

**Manual Part No. 03585-90007**
**Microfiche Part No. 03585-90207**


8600 Soper Hill Road
Everett, Washington 98205-1298 U.S.A.

Printed: February 1989

## SAFETY SYMBOLS

**General Definitions of Safety Symbols Used On Equipment or In Manuals.**

Instruction manual symbol: the product will be marked with this symbol when it is necessary for the user to refer to the instruction manual in order to protect against damage to the instrument.

Indicates dangerous voltage (terminals fed from the interior by voltage exceeding 1000 volts must be so marked).

OR

Protective conductor terminal. For protection against electrical shock in case of a fault. Used with field wiring terminals to indicate the terminal which must be connected to ground before operating equipment.

Low-noise or noiseless, clean ground (earth) terminal. Used for a signal common, as well as providing protection against electrical shock in case of a fault. A terminal marked with this symbol must be connected to ground in the manner described in the installation (operating) manual, and before operating the equipment.

OR

Frame or chassis terminal. A connection to the frame (chassis) of the equipment which normally includes all exposed metal structures.

Alternating current (power line).

Direct current (power line).

Alternating or direct current (power line).

**WARNING**

The WARNING sign denotes a hazard. It calls attention to a procedure, practice, condition or the like, which, if not correctly performed or adhered to, could result in injury or death to personnel.

**CAUTION**

The CAUTION sign denotes a hazard. It calls attention to an operating procedure, practice, condition or the like, which,if not correctly performed or adhered to, could result in damage to or destruction of part or all of the product.

NOTE:

The NOTE sign denotes important information. It calls attention to procedure, practice, condition or the like, which is essential to highlight.

HEWLETT PACKARD

## SAFETY SUMMARY

**The following general safety precautions must be observed during all phases of operation, service, and repair of this instrument. Failure to comply with these precautions or with specific warnings elsewhere in this manual violates safety standards of design, manufacture, and intended use of the instrument. Hewlett-Packard Company assumes no liability for the customer's failure to comply with these requirements. This is a Safety Class 1 instrument.**

### GROUND THE INSTRUMENT

To minimize shock hazard, the instrument chassis and cabinet must be connected to an electrical ground. The instrument is equipped with a three-conductor ac power cable. The power cable must either be plugged into an approved three-contact electrical outlet or used with a three-contact to two-contact adapter with the grounding wire (green) firmly connected to an electrical ground (safety ground) at the power outlet. The power jack and mating plug of the power cable meet International Electrotechnical Commission (IEC) safety standards.

### DO NOT OPERATE IN AN EXPLOSIVE ATMOSPHERE

Do not operate the instrument in the presence of flammable gases or fumes. Operation of any electrical instrument in such an environment constitutes a definite safety hazard.

### KEEP AWAY FROM LIVE CIRCUITS

Operating personnel must not remove instrument covers. Component replacement and internal adjustments must be made by qualified maintenance personnel. Do not replace components with power cable connected. Under certain conditions, dangerous voltages may exist even with the power cable removed. To avoid injuries, always disconnect power and discharge circuits before touching them.

### DO NOT SERVICE OR ADJUST ALONE

Do not attempt internal service or adjustment unless another person, capable of rendering first aid and resuscitation, is present.

### USE CAUTION WHEN EXPOSING OR HANDLING THE CRT

Breakage of the Cathode-ray Tube (CRT) causes a high-velocity scattering of glass fragments (implosion). To prevent CRT implosion, avoid rough handling or jarring of the instrument. Handling of the CRT shall be done only by qualified maintenance personnel using approved safety mask and gloves.

### DO NOT SUBSTITUTE PARTS OR MODIFY INSTRUMENT

Because of the danger of introducing additional hazards, do not install substitute parts or perform any unauthorized modification to the instrument. Return the instrument to a Hewlett-Packard Sales and Service Office for service and repair to ensure that safety features are maintained.

### DANGEROUS PROCEDURE WARNINGS

Warnings, such as the example below, precede potentially dangerous procedures throughout this manual. Instructions contained in the warnings must be followed.

**WARNING**

**Dangerous voltages, capable of causing death, are present in this instrument. Use extreme caution when handling, testing, and adjusting.**

## Volume I
## Table of Contents



## Volume II
## Table of Contents

# Table of Contents

## Table of Contents (Cont'd)

## Table of Contents (Cont'd)

## List of Schematics

# SECTION XI
# SERVICE

# SECTION XI
# SERVICE

**WARNING**

*Line voltage is exposed inside the instrument even when the LINE switch is in the off position.*

*The display section of the 3585 contains high voltages (up to +18KV) which may remain present in circuits EVEN WHEN THE INSTRUMENT IS OFF.*

*Do not remove any of the instruments protective plastic covers before reading the warnings pertaining to the components under them.*

## 11-1. INTRODUCTION

This section contains information to help you repair the 3585. Due to the complexity of the instrument, the Service Section is divided up into functional Service Groups. Figure 11-P-1 shows a basic block diagram of the instrument. Each block of the block diagram contains the Service Group number pertaining to that section of the instrument. Also contained in this section is an Index (Table 11-P-6) which tabulates all of the Troubleshooting information contained in Section 11 and Table 11-P-2 which is a cross reference between the PC Board numbers and the Service Group numbers.

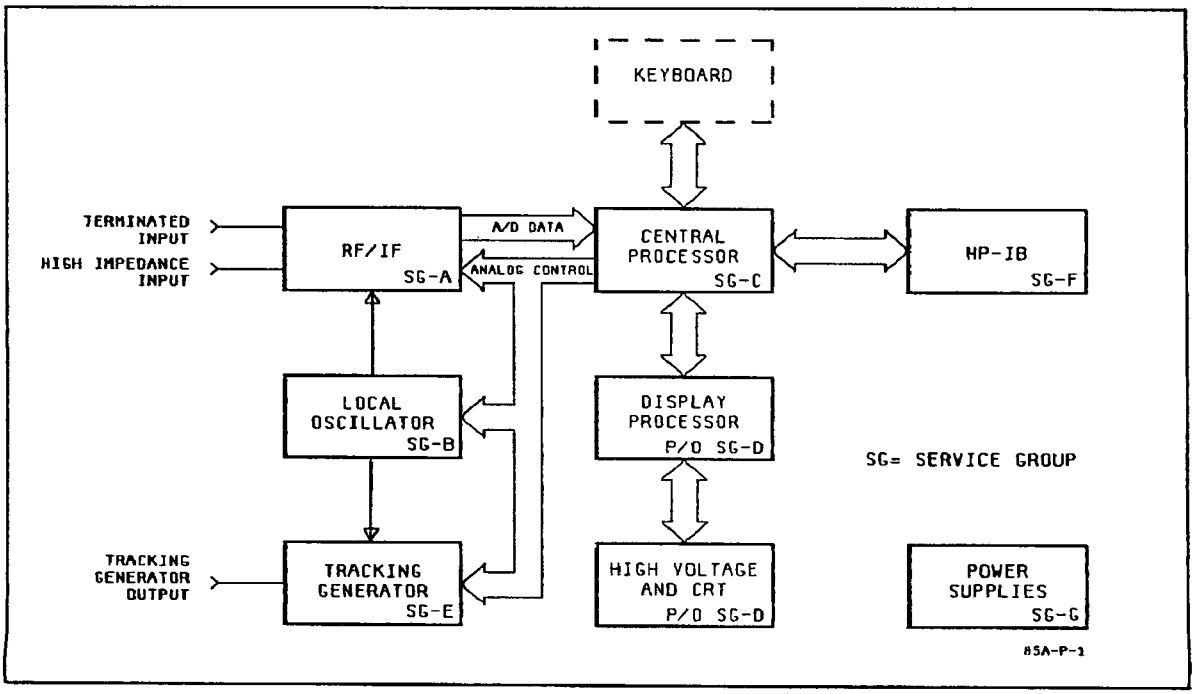


**Figure 11-P-1. Very Simplified Block Diagram**

## 11-2. What Service Groups Contain

Each of the Service Groups contains the following information:

a. Index to the particular Service Group.
b. Adjustments.
c. Troubleshooting Notes.
d. Troubleshooting Information.
e. Component Locator.

## 11-3. Getting Started

The purpose of this section is to lead you in the repair of your instrument as quickly as possible. To accomplish this goal, a Preliminary Troubleshooting Procedure has been developed. The Preliminary Troubleshooting Procedure primarily consists of front panel checks which will direct you to one of the individual Service Groups after localizing the problem.

One of the advantages of the 3585 microprocessor controlled operation is its ability to check many of its own parameters from the front panel. The Preliminary Troubleshooting Procedure (as well as the Service Groups) takes full advantage of this capability. Therefore, in spite of what problem you may be experiencing with your instrument you should always start with the Preliminary Troubleshooting Procedure.

## 11-4. Things to Remember

1. Whenever you have finished with a PC Board, check that all the test jumpers are in the "Normal" position.

2. After completing a repair or when leaving a Service Group, check that all of the jumpers and test switches have been returned to their normal position.

3. Reconnect all cables when leaving a Service Group.

**NOTE**

*Before removing any of the 3585's covers, be aware of the following cautions:*

**CAUTION**

*1. Do not remove or replace circuit boards when the LINE switch is on unless specifically instructed to do so.*

*2. Improper adjustment of the CRT HIGH VOLTAGE may lead to a shortened CRT life.*

*3. When placing a PC Board on a PC Extender, be sure the board is not installed backwards on the extender.*

## 11-5. Test Modes

The 3585 contains 9 internal test modes. These test modes allow you to connect internal sources, disable calibration or reconfigure particular circuit boards so that tests can be made on the 3585. The tests are defined as follows:

**Table 11-P-1. Test Mode Definitions**

| Entry Code | A83 Switch Code (Octal) | Function |
|---|---|---|
| 00 | 000 | Test Modes off. |
| 01 | 001 | Normal instrument operation but with calibration disabled and no calibration offsets. |
| 02 | 002 | Internal 10 MHz switched into input otherwise normal instrument operation. |
| 03 | 003 | Internal 10 MHz switched into input and calibration disabled and no calibration offsets. |
| 04 | 004 | Tracking generator switched into input, otherwise normal operation. |
| 05 | 005 | Tracking generator switched into input; no calibration; no calibration offsets. |
| 06 | 006 | Local oscillator will perform in its single loop mode for all BW's. |
| 07 | 007 | Takes Center Frequency Step Size as a tracking generator offset after a calibration. Tracking generator frequency is set positive with respect to analyzer tuned frequency. Maximum offset is 1.5 kHz. |
| 08 | 010 | Displays the Tracking Generator 10.35 MHz VCXO tuning curve on screen with the vertical scale = CF Step Size. The counter reads frequency deviation above and below 10.35 MHz. A CF Step Size > 500 Hz exercises the course VCXO tuning DAC, while CF Step Sizes ≤ 499 Hz exercise the fine DAC with the course DAC held at its current position. This mode is activated when the counter is turned on and the RES BW being used is calibrated. |
| 09 | 011 | Calibration disabled and no calibration offsets. If CF Step Size is any number other than 1.1 Hz, 1.2 Hz, or 1.3 Hz this mode is the same as Test Mode 1. If CF Step Size is one of the above numbers the P.C. board corresponding to that number will be programmed to the chosen BW while the other two boards will be programmed to 30 kHz BW. This mode is accessed when the RBW is changed. This Test mode is used for adjusting the IF BW's. |

The Test Modes are selected by entering:

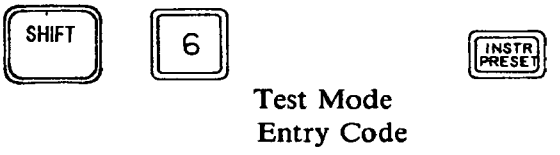


An Instrument Preset must be entered after the Test Mode Entry Code for the Test Mode to become active. The selected Test Mode will remain in effect until Instrument Preset is pressed again.

The Test Modes may also be accessed by setting the test switches on the A83 Board to the listed A83 Switch Code. for example, Test Mode 03 may be placed in effect by:

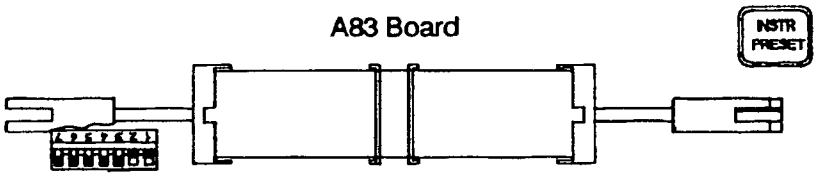


Instrument Preset must be pressed to enter the Test Mode. By using the A83 switches the Test Mode will remain in affect as long as the A83 switches are set, in spite of the number of times Instrument Preset is pressed. To exit the Test Mode, set all of the test switches to the open position (away from the PC Board) and pressing Instrument Preset.

**Table 11-P-2. PC Board To Service Group Cross Reference**

| PC Board Number | Service Group Number | PC Board Number | Service Group Number |
|---|---|---|---|
| A1 | A-1 | A34 | B-5 |
| A2 | A-2 | A50 | E |
| A3 | A-2 | A51 | E |
| A4 | A-2 | A52 | E |
| A5 | A-2 | A53 | E |
| A6 | A-2 | A61 | D-1 |
| A10 | A | A65 | D-4 |
| A14 | A-4 | A67 | D-4 |
| A15 | A-5 | A70 | G-1 |
| A16 | A-6 | A71 | G-2 |
| A17 | A-3 | A72 | G-2 |
| A18 | A-3 | A73 | G-2 |
| A19 | A-3 | A74 | G-2 |
| A21 | B-1 | A75 | G-1 |
| A22 | B-2 | A80 | C-1 |
| A23 | B-3 | A81 | B-1 |
| A24 | B-2 | A82 | C-1,C-2 |
| A25 | B-2 | A83 | C-3,F |
| A26 | B-3 | A85 | D-1 |
| A27 | B-2 | A86 | D-2 |
| A28 | B-2 | A87 | C-4 |
| A31 | B-4 | A89 | G-1 |
| A32 | B-4 | | |
| A33 | B-4 | | |

**Table 11-P-3. Performance Test Failure To Service Group Cross Reference**

**NOTE**

*This table is only meant to be a reference. It is still recommended that you use the Preliminary Troubleshooting Procedure to locate the problem. Problems related to distortion or spurs should be further analyzed using Service Group H.*

| Test Title | Service Group Reference |
|---|---|
| GRIND | NA |
| Instrument interconnect test & Header | NA |
| Turn on/Cal Offset | F,A-5,E,A-1 |
| Source Accuracy | NA |
| Calibrator Accuracy (optional) | A-1 |
| Range Calibration | A-1 |
| Amplitude Linearity | A-4 |
| Ref Level Set Accuracy | A-3,A-5 |
| Flatness, 50 ohm, no cal, 10Hz to 40M | A-1 |
| Flatness, 1M, 20Hz to 40MHz | A-1 |
| RETURN LOSS | A-1 |
| Noise vs. BANDWIDTH | A-1,A-2 |
| 1M Input Noise, open circuit | A-1 |
| Marker Accuracy | C |
| Low Freq. Response/LO sidebands | A-2,B |
| Residual Spurs | B,H |
| Conv/Input Spurs and Image | A-2,H |
| IF Harmonic Distortion | H |
| Harmonic Distortion | H |
| IM Distortion | H |
| BW MEAS | A-3 |
| Tracking Generator Flatness | E |
| Step IF, Fraction N Spurs | H |
| API Spurs in Multiple Loop | H |
| End of Perf. Test message | NA |
| Dynamic Range Chart | NA |
| HP-IB Test for Op. Verification | NA |

**NOTE**

*If the Manual or Center Frequency is < 150kHz The Amplitude Cal will occur at 150kHz.*

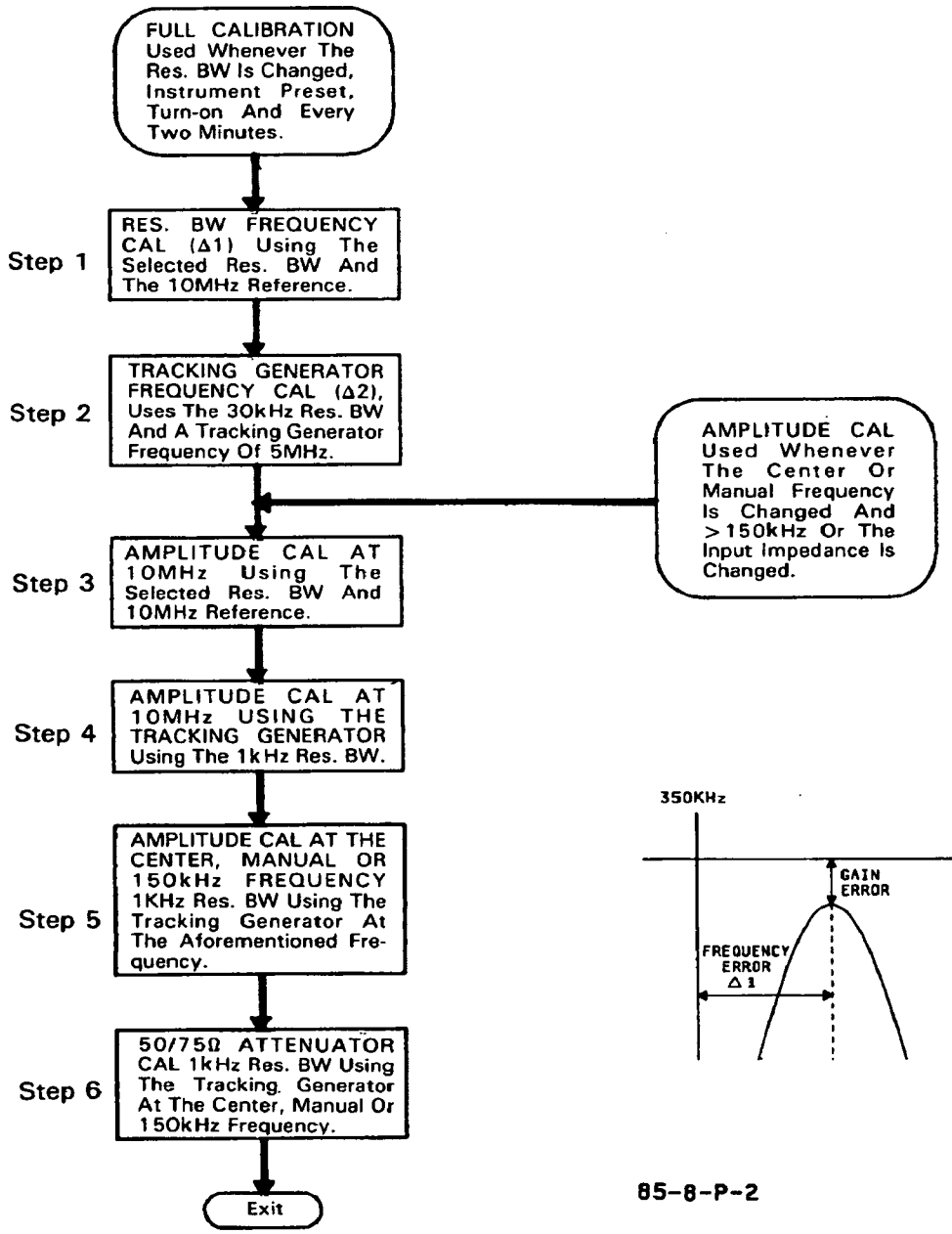


**NOTE**

*Table 11-P-4 describes the Calibration Errors which can occur during each of the calibration steps.*

**Figure 11-P-2. Calibration Sequence Flowchart**

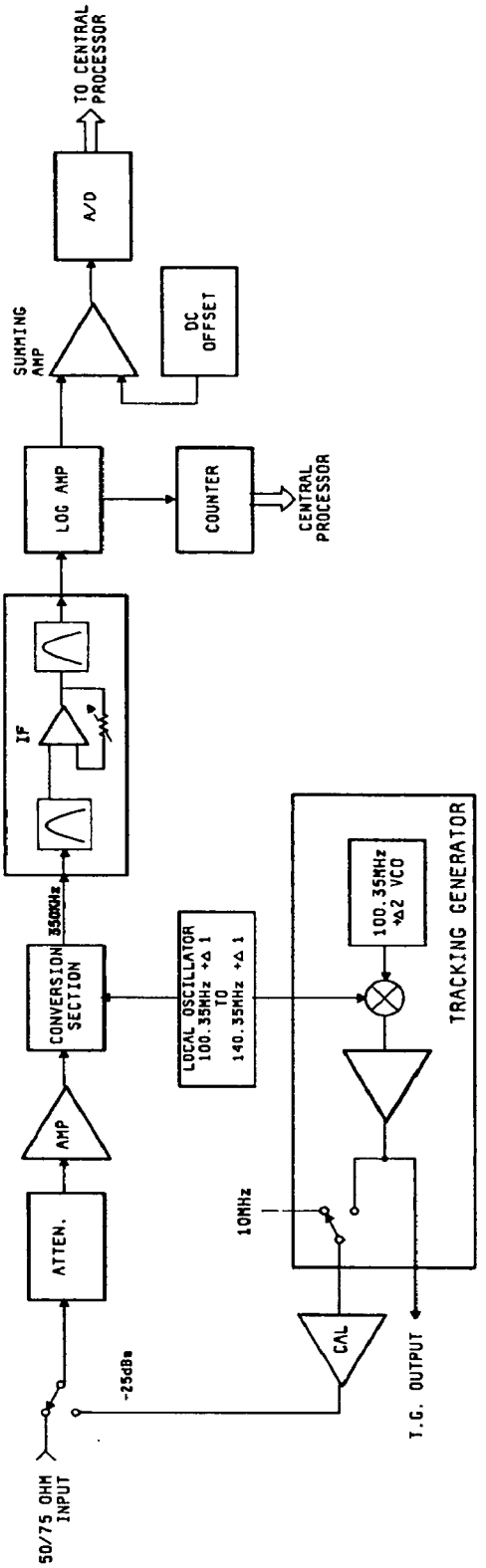


**Figure 11-P-3. Calibration System Block Diagram**

**Table 11-P-4. Calibration Error Definitions**

**NOTE**

*This table is only meant to be a summary reference. A more complete explanation of the Calibration Errors is given in Table 11-P-5.*

| Cal Error No. | Comments |
|---|---|
| | The following errors occur while adjusting the IF frequency offset of the selected Res. BW. (Step 1) |
| 01 | Measured amplitude too large |
| 02 | Measured amplitude too small |
| 03 | 4dB IF gain steps in error |
| | The following errors occur while adjusting the Tracking Generator frequency so that it will track the input frequency ± 1Hz. This calibration is done at 5MHz and 30KHz Res BW. (Step 2) |
| 09* | Counter malfunction |
| 10* | Tracking Generator cannot be adjusted to track the input frequency to within ± 1Hz. |
| | The following errors occur while calibrating the amplitude offset of the selected Res. BW with the 10MHz Reference signal. (Step 3) |
| 04 | Measured amplitude too small |
| 05 | Measured amplitude too large |
| 06 | Measured amplitude is slightly divergent |
| 07 | Measured amplitude offset exceeds ± 5dB |
| 08 | 4dB IF gain steps in error |
| | The following errors are the same as calibration errors 01 thru 10 except the errors occur while re-calibrating the 1kHz Res. BW. (Step 4) |
| 11 | Measured amplitude too large |
| 12 | Measured amplitude too small |
| 13 | 4dB IF gain steps in error |
| 14 | Measured amplitude too small |
| 15 | Measured amplitude too large |
| 16 | Measured amplitude is slight divergent |
| 17 | Measured amplitude offset exceeds ± 5dB |
| 18 | 4dB IF gain steps in error |
| 19 | Counter malfunction |
| 20 | Tracking Generator cannot be adjusted to track the input frequency to within ± 1Hz. |
| | The following errors occur while calibrating the amplitude offset at 10MHz with the Tracking Generator and the 1kHz Res. BW. (Step 4) |
| 21 | Measured amplitude too small |
| 22 | Measured amplitude too large |
| 23** | Measured amplitude at 10MHz using the Tracking Generator differs by more than ± 1dB from the measured amplitude at 10MHz using the 10MHz reference. |
| | The following errors occur while calibrating the amplitude offset at the Manual or Center Frequency with the Tracking Generator and the 1kHz Res. BW. (Step 5) |

**Table 11-P-4. Calibration Error Definitions (Cont'd)**

| Cal Error No. | Comments |
|---|---|
| 24 | Measured amplitude too small |
| 25 | Measured amplitude too large |
| 26 | Measured amplitude is slightly divergent |
| 27 | Total IF amplitude offset exceeds ± 5dB |
| | The following errors occur while calibrating the input attenuators. (Step 6) |
| 28 | Measured amplitude too small |
| 29 | Measured amplitude too large |
| 30** | Measured amplitude of the attenutator calibration differs from the measured amplitude of the IF calibration by more than ± 1dB. |
| 31** | Attenuator plus IF amplitude offset exceeds ± 5dB. |
| 33* | Tracking Generator data cable (A50J5 or A40J4) is disconnected. |

* When these Cal Errors are displayed the Cal routine does not abort. The 10MHz Reference is used in place of the Tracking Generator and the routine continues.

**the Calibration routine will attempt to remove the error from the system. If successful the routine will continue. If the errors are > ± 5dB the routine will abort.

# 3585 PRELIMINARY TROUBLESHOOTING PROCEDURE

# 3585 PRELIMINARY TROUBLESHOOTING PROCEDURE

**A.** 1. Set the LINE switch to OFF.

2. Remove the instrument's top cover.

3. Set the LINE switch to ON.

**B. Did you hear one quick low beeper sound at turn-on?**

1. If the beeper did not sound, then suspect the processor board (A82) or the I/O board (A83, data bus or machine data bus) and go to Service Group C.

2. If the beeper did sound, then go to step C.

**C. Did the front panel lights flash 10 times (or are all front panel LEDs on)?**

1. If yes, then look at the four LEDs on A83. They represent a test number in binary format (the far right (green) LED being the lowest order bit). Check Table 11-P-4a for the action required for the test failure indicated by the LED pattern.

   If the A83 LEDs cycled through the tests but all were off when stopped when completed, then go to the RAM Address/Data tests (Service Group C).

2. If no, then go to step D.

Board #
11 → 17
12 → 17
13 → 17

Rick Eckel

| HP3585A/B | UPON RECEIVING INSTRUMENT | 11/05/90 |
|---|---|---|

1) Remove the top cover, and use an Air Gun to clean out box and fan.

2) Front Panel Lockup - Service Group 'C'

3) No Display Only - Service Group 'G' - then Service Group 'D'
(Power Supplies) (Display Proc.)

4) Keyboard Check - A -> D and H
(If further key check needed, use shift 614)

5) CAL ERROR - Table 11-P-5
(LO Unlock - Service Group 'B', except for an unlock in the 3Khz or smaller RBW, then Sum Loop adjust, page 5-15)

6) Signal Problem - Step K, main signal path troubleshooting tree.

**Table 11-P-4a. Power on Test Error Action Table**

| Test # | A83 LED Indication ● = on ○ = off | Test Description | Action/"Go to". |
|---|---|---|---|
| 11 | ● ○ ● ● | Tests A83SW101 for a SA test selection. | Verify that all positions of A83 SW101 are "open". |
| 10 | ● ○ ● ○ | Tests for the I/O (A83) board being present | Service Group C (SA1) |
| 9 | ● ○ ○ ● | Master reset test. Clears all memory if INST PRESET is still held down (after 10 flashes) during turn-on. | This LED pattern should change after 10 flashes and continue with the turn-on tests. If it does not, suspect ROM or keyboard. |
| 8,7 | ● ○ ○ ○<br>○ ● ● ● | Reads and writes two bytes into one of the A82 RAMs. | If "8" is flashed 10 times, the low-order RAM failed.<br>If "7" is flashed 10 times, the high-order RAM failed.<br>Go to Service Group C. If not RAM, check A82U19-U22. |
| 6 | ○ ● ● ○ | Longer RAM test. Starting at the top of RAM sequential locations are saved, written, read and restored. | Go to Service Group C (RAM Addr./Data). |
| 5,4 | ○ ● ○ ●<br>○ ● ○ ○ | ROM checksum test. | If "5" is flashed 10 times, the low-order ROM (A82 U11) failed<br>If "4" is flashed 10 times, the high-order ROM (A82 U12) failed. Go to Service Group C. |
| 3 | ○ ○ ● ● | Multi-function peripheral test. | Suspect A82 U106. Go to Service Group C |

**D. Are the four green LED's on Power Supply boards A71-74 lit (Figure 11-P-4) and the yellow LED's off.**

1. If the green LED's are on and the yellow LED's off then go to step C. Note that the Power Supply voltages can be incorrect even when the green LED's are on; therefore, if there is a question about one of the Power Supplies check them against those in Figure 11-P-4.

2. If some of the green LED's are off or the yellow LED's on, go to Service Group I. If the Power Supplies are faulty, go to the Service Group pertaining to the Power Supply (Service Group 11-G).

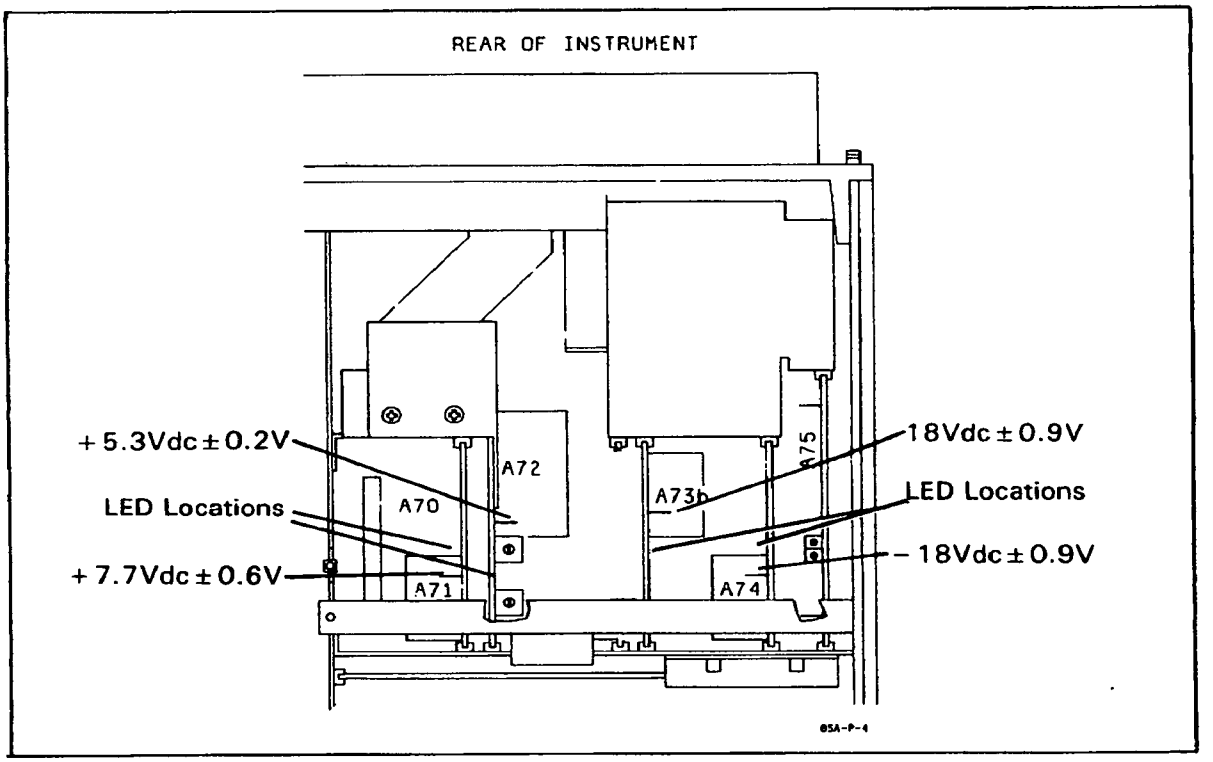


**Figure 11-P-4. Power Supply Voltage Indicators And Test Points**

**E. Does the trouble appear *only* when the High Impedance (1MΩ) input is being used?**

1. If question C is true, then the problem is isolated to the 1MΩ input, go to Service Group A-1 and start at the A1 1M ohm Channel Troubleshooting Tree.

2. If the problem is not isolated to the 1MΩ channel, go to step F.

**F. Does the trouble appear *only* when the instrument is being operated in Remote?**

1. If yes, then go to Service Group F to troubleshoot the A83 HP-IB circuitry.

2. If the problem is not isolated to Remote operation, go to step G.

**G. Is the trouble associated with the rear panel VIDEO OUTPUT or DISPLAY outputs *only* ?**

1. If the problem is with one of the rear panel outputs listed, go to:

   - Service Group A-5 for a VIDEO OUTPUT problem, probable defect is the buffer op-amp A15U8d.

   - Service Group D-2 for the DISPLAY X and Y outputs (probable defect A86U20,U21,F1,F2 or CR3-6) and for the DISPLAY Z output (probable defect A85F1,Q3,CR1,CR2).

2. If the problem is not related to these rear panel outputs, go to step H.

**H. Are the proper front panel keyboard LED's lit (Figure 11-P-5)?**

1. If the correct keyboard LED's are lit, then go to step I.

2. If the keyboard LED's are incorrect according to Figure 11-P-5, then go to step H-3.

3. Verify that all positions of A83SW101 are in the "open" position.

4. Does the marker move when the Marker/Continuous Entry Control (knob) is rotated?

   a. If the marker moves, go to step H-5.

   b. If the marker will only move in one direction or not at all, then the Central Processor is not responding to keyboard inputs. Go to Service Group C.

5. Can some of the keys with an LED indicator be turned on and off.

   a. If some of the keys can be turned on and off, then the problem has to do with the LED's or the LED drivers, go to Service Group C.

b. If the keys will not respond, the Marker/Continuous Entry Control may be keeping the keys from responding. Start with the Knob Troubleshooting procedure, Service Group C. If the "Marker/Continuous Entry Control" checks out good, then go to the Keyboard Troubleshooting Tree, Service Group C.

I. **Press each of the front panel keys that has an LED indicator.**

1. If all of the key lights operate properly, go to step J. (If *some* of the lights fail to go on or off, go to Service Group C.

2. If *none* of the keys will respond, proceed with the flow chart associated with Figure 11-P-6, Display Test.

J. **Press INSTRUMENT PRESET.**

**Did the beeper sound and/or a Cal Error Code or failure message appear on the CRT screen?**

1. If the beeper did not sound or messages other than "Calibrating" appear on the CRT screen, go to step K.

2. If the beeper sounds and/or a Cal Error Code is displayed, check Table 11-P-5 for an indication of the error. If the error indicates several possible causes, continuing with step K should help narrow down the problem.

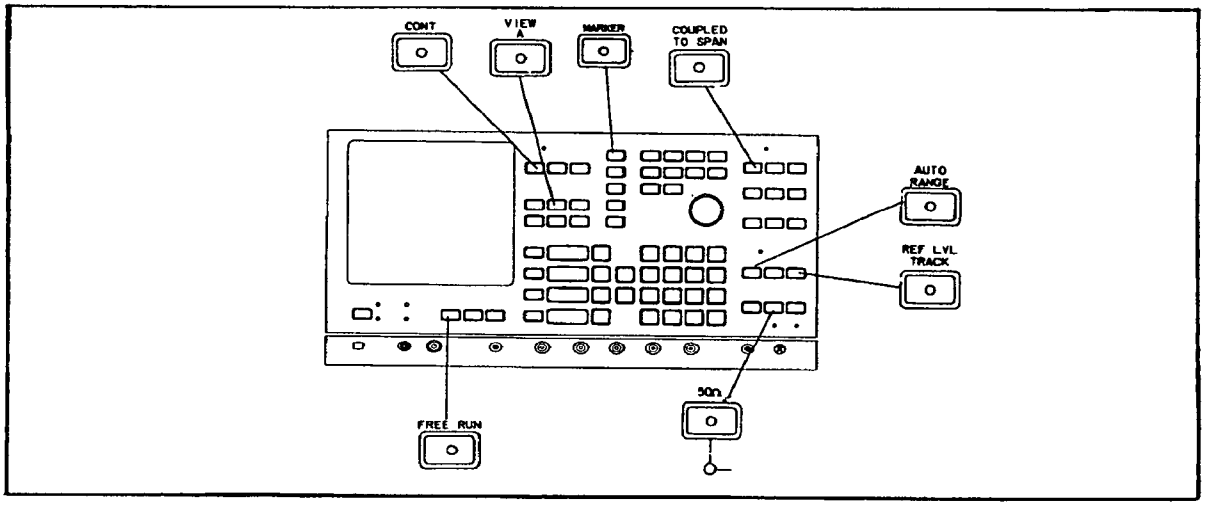


**Figure 11-P-5. Front Panel LED Turn-on State**

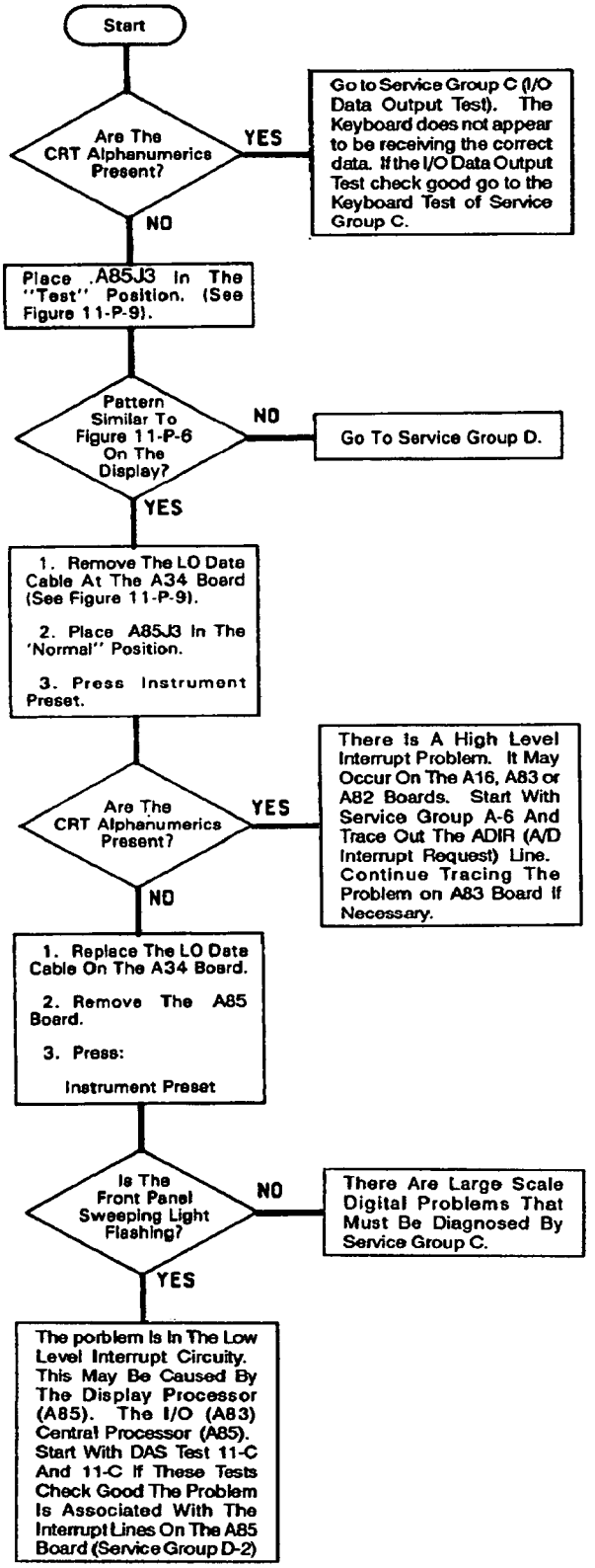


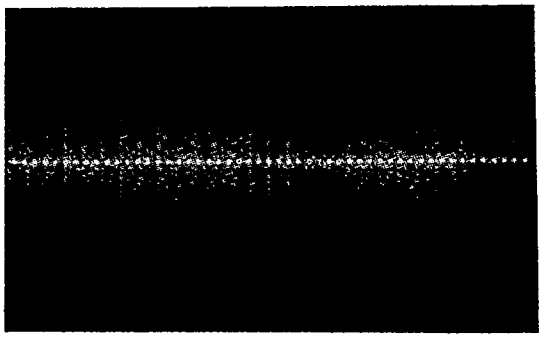

**Note:**
The vertical position of the row of dots is random.

**Figure 11-P-6. Display Test Pattern**

**Table 11-P-5. Calibration Error Action Table**

| Symptom | Action - Go To Specified Service Group |
|---|---|
| No display, beeper sounds | Service Group C - ROM Checksum error. |
| Display visable, beeper sounds, no Cal errors. | Service Group C - ROM Checksum error. |
| Local Osc. Unlocked | Service Group B |
| Counter Failure | Service Group C |
| Cal Error 1,2,4,5 or 7 | Go to step K of this procedure. |
| Cal Error 3 or 8 | The defect may be in the IF Gain Amplifiers (A12), the dc offset (A15) or the A to D Converter (A16). Run the A to D Converter Check at the end of this table. If the A to D Converter Check looks OK, go to Service Group A-3. |
| Cal Error 11 thru 18 | Service Group A-3 - 1kHz IF Bandwidth error. |
| Cal Error 6 or 16 | The defect may be in the Log Linearity (A14), the dc offset (A15), the A to D Converter (A16) or the IF Gain Amplifiers (A15). Run the A to D converter Check at the end of this Table. If the A to D Converter Check looks OK, go to Service Group A-4, then Service Group A-3, then Service Group A-5. |
| Cal Error 9 or 19 or Counter Failure | Service Group C - The Counter is not working properly or the buffer formed by A14Q3 or A61U1a is defective. |
| Cal Error 10 or 20 | Enter:<br>Res. BW 1kHz<br>Shift 4<br>Note the Cal Error:<br>1. If you had a Cal Error 20 originally and now have a Cal Error 10, the 1kHz Res. BW is in error. Go to Service Group A-3.<br>2. If you had a Cal Error 10 in both cases the tuning information for the Tracking Generator DAC may be in error. Go to Service Group E.<br>3. If the Cal Error went away in the 1kHz BW the 30kHz Res. BW center frequency is in error. Adjust A5T3,4 and A14L5,7 according to the directions given in Section V. |
| Cal Error 21 thru 23 | Service Group E - The Tracking Generator or Cal Signal Switching circuit is in error. |
| Cal Error 24 thru 27 | 1. Connect the Tracking Generator Output to the Terminated (50Ω) input. Is the trace flat ± 1dB? |

**Table 11-P-5. Calibration Error Action Table (Cont'd)**

| Symptom | Action - Go To Specified Service Group |
|---|---|
| Cal Error 24 thru 27 (Cont'd) | a. If the trace is flat ± 1dB, go to Service Group A-1 and Troubleshooting the Calibrator.<br><br>b. If the trace is not flat ± 1dB, go to step 2.<br><br>2. Disconnect the Tracking Generator. Connect a source of known accuracy to the Terminated Input. Set the source for an Amplitude of −25dBm. Set the source frequency to 10,20,30 and 40MHz. Note the amplitude shown by the 3585 for each frequency setting.<br><br>a. If the amplitude readings are within ± 1dB of −25dBm, go to Service Group E.<br><br>b. If the amplitude readings are not within ± 1dB, go to Service Group A-1. |
| Cal Error 28 thru 30 | Service Group A-1 - These errors are almost invariably caused by the Terminated channel attenuators; however, they can be caused by the 16dB amplifiers, the 4dB step attenuator or the Overdrive attenuator on the A12 and A13 boards (Service Group A-3). |
| Cal Error 31 | Service Group A-3 - This error can be caused by IF Gain step errors, slightly resistive attenuators in the Terminated channel (Service Group A-1) or Log Linearity problems (Service Group A-4). |
| Cal Error 33 | The Tracking Generator has been removed from the instrument or the cable from A50J2 to A40J4 has been disconnected. |

**A/D Converter Check**

1. Enter:

SHIFT 603
INSTRUMENT PRESET
START FREQUENCY.....9,999,980Hz
STOP FREQUENCY.....10MHz
SWEEP TIME.....18 sec

2. The display should now resemble Figure 11-P-7. Do not be concerned if vertical displacement is apparent, this may be caused by IF gain problems.

3. Is the trace smooth with no apparent "stair steps". (See Figure 11-P-8).

4. If the trace is smooth the A to D Converter is operating correctly.

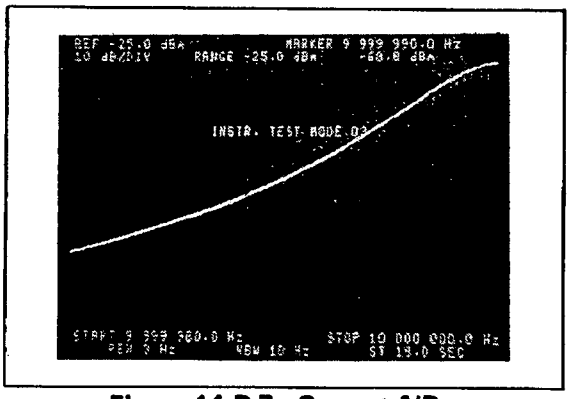


Figure 11-P-7. Correct A/D

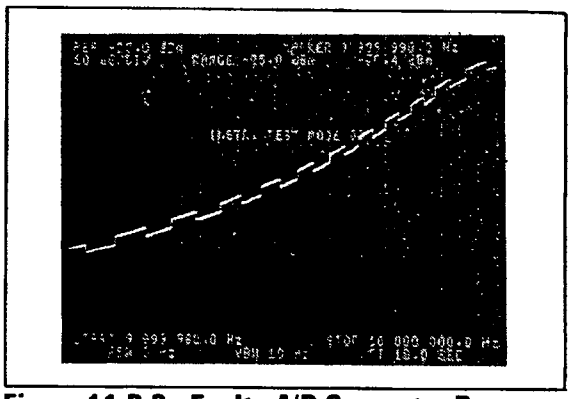

Figure 11-P-8. Faulty A/D Converter Response

K. **A main signal path problem has occured. Use the flow chart in Figure 11-P-9 to help isolate the problem to one or more boards.**

L. **Is the front panel SWEEPING light flashing?**

1. If it is flashing, go to step M.

2. If it is not flashing, go to Service Group B-5.

M. **Are the CRT *alphanumeric* readouts present and correct as shown in Figure 11-P-10?** (At this point, ignore the graphic presentation and the numeric value of the "MARKER" amplitude reading.)

1. If the alphanumeric readouts are correct, go to step N.

2. If the alphanumeric readouts are not correct, place place A85J13 in the "Test" position (see Figure 11-P-11).

   a. If the CRT display now resembles Figure 11-P-11, then the information being sent by the Central Processor to the Display Processor is incorrect. Go to Service Group C to troubleshoot the problem. Note that A85U1, through U7 (Service Group D) can also cause this problem.

   b. If the CRT display does not resemble Figure 11-P-11 (i.e., display is distorted, blank, etc.), then the problem is in the Display Section (Service Group D).

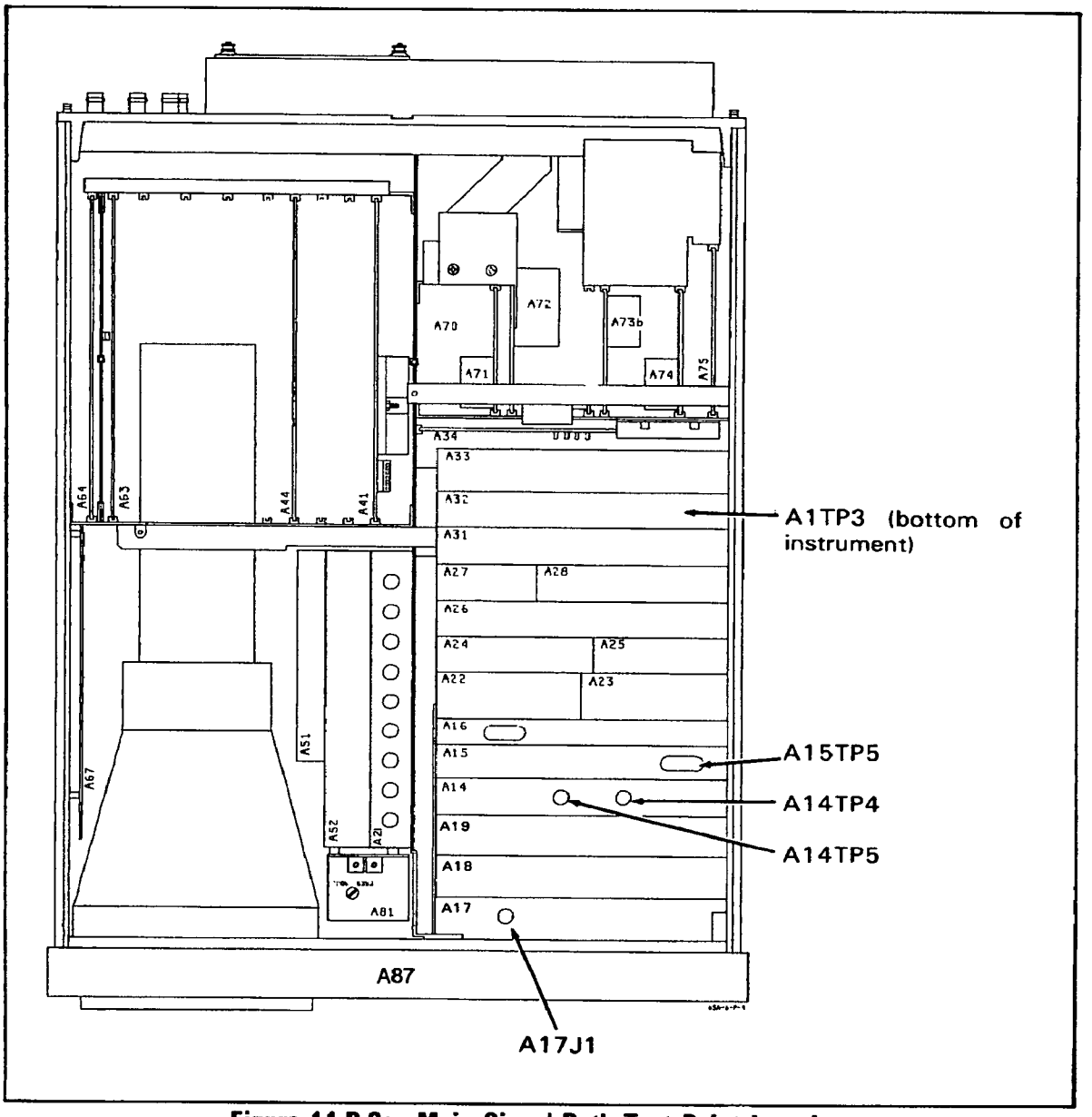


**Figure 11-P-9a. Main Signal Path Test Point Locations**

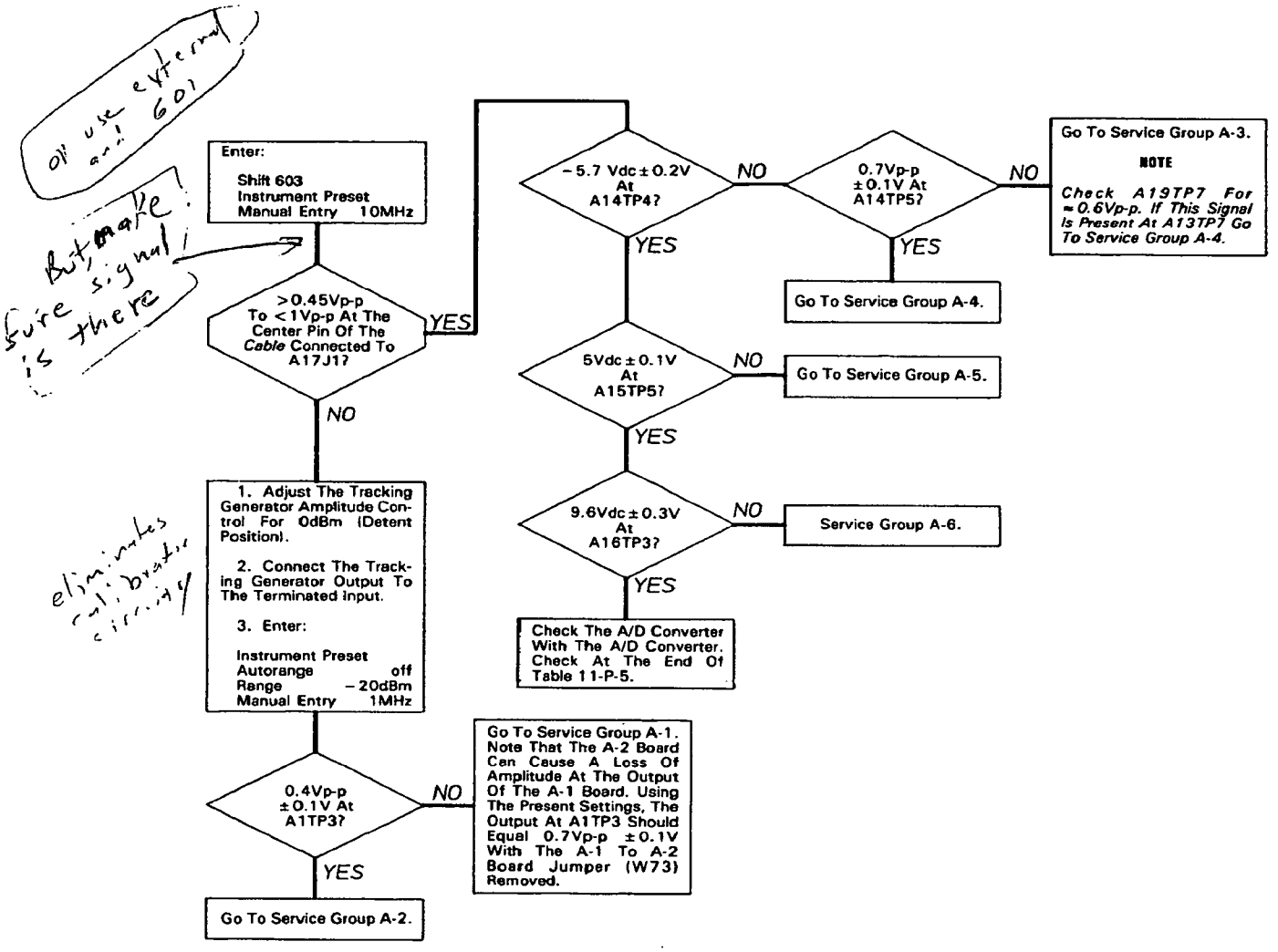


**Figure 11-P-9b. Main Signal Path Troubleshooting Tree**

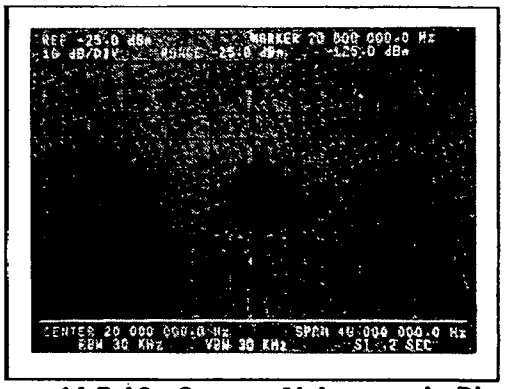


**Figure 11-P-10. Correct Alphanumeric Display**

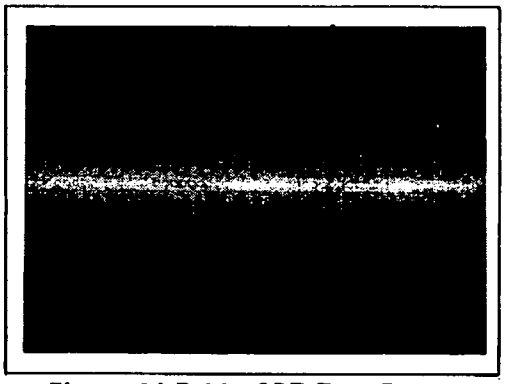

**Note:**
The vertical position of the row of dots is random.

**Figure 11-P-11. CRT Test Pattern**

N. **Do the front panel DISPLAY controls (i.e., INTENSITY, FOCUS, etc.) operate properly?**

1. If the controls operate properly, go to step O.

2. If the controls fail to have an effect on the display, go to Service Group D-4.

O. **Check the graphic presentation (see Figure 11-P-12):**

1. **Is the noise floor present and is the average noise level −70dB to −80dB below the Reference Level (top graticule line)?**

   a. If the noise floor is within the specified range, continue with step 0-2.

   b. If the noise floor is not within the specified range, then go to step K.

   c. If there is no graphic display at all (including the line across the bottom of the display graticule), go to Service Group D.

2. **Is the analyzer's zero response present and is its peak amplitude −15dB to −45dB below the Reference Level?**

**NOTE**

*If the zero response is not visible, increase the display intensity -the zero response is sometimes difficult to see because it is masked by the CRT graticule.*

a. If the zero response is between −15dB and −45dB below the Reference Level, go to step P.

b. If the zero response is greater than 45dB below the Reference Level there is a problem in the Input/Conversion Section. This may be due to the Local Oscillator, the Conversion Section circuitry or dc offset from the A1 Output Buffer. Service Group A-2 will allow you to check the Local Oscillator and Conversion sections. If these two sections check good, go to Service Group A-1 and check the Output Buffer. If the zero response is less than 15dB below the Reference Level there is a dc offset problem in the A1 Output Buffer, Service Group A-1.

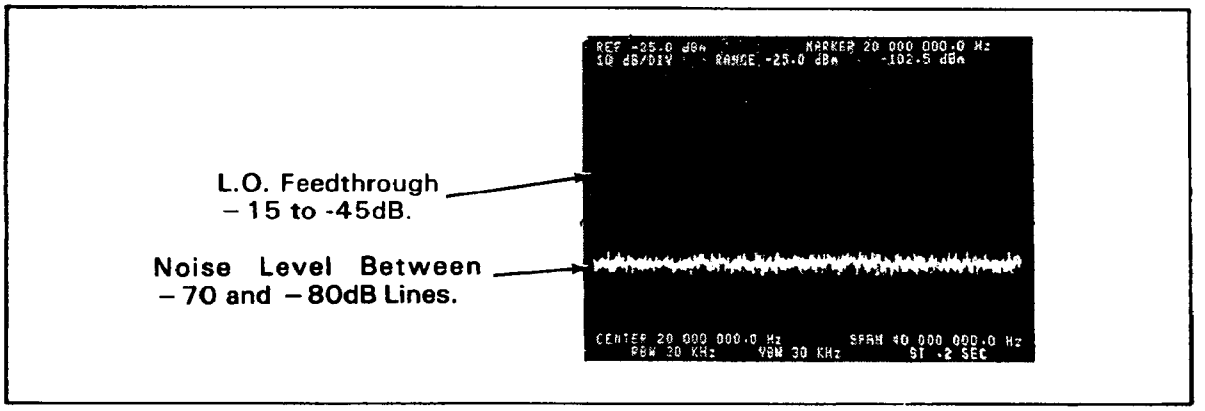


**Figure 11-P-12. Correct Graphic Display**

**P. Press:**

INSTRUMENT PRESET
VIEW B.....on

**Do the alphanumeric readouts on the CRT appear to be correct? (See Figure 11-P-13.)**

1. If the alphanumerics appear correct, go to step Q.

2. If the alphanumerics look as though one set of words is being written over another (see Figure 11-P-13) the RAM Refresh circuitry is not functioning correctly. Go to Service Group C.

**Q. Press each of the dark ENTRY keys and verify that the corresponding parameter is properly displayed and highlighted on the CRT screen.**

1. If each of the ENTRY keys highlights the proper parameter, continue with step R.

2. If some of the Entry keys fail to highlight the proper parameter, go to Service Group C.

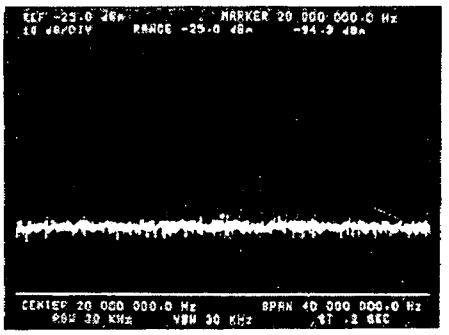

A & B Trace On.

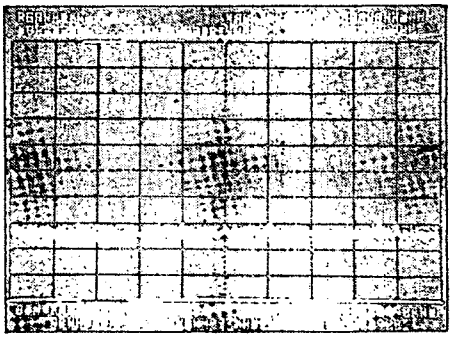

Broken RAM Refresh A & B On.

**Figure 11-P-13. RAM Refresh Test**

R. **To verify that the remaining front panel keys are operative, enter:**

SHIFT 6 1 4 , use pitch

~~SHIFT ..... ENTER OFFSET~~
~~SHIFT ..... MKR → CF~~
~~SHIFT ..... MKR → REF LVL~~
~~SHIFT ..... OFS → SPAN~~
~~SHIFT ..... CLEAR~~
~~SHIFT ..... PRESET~~
~~SHIFT ..... LOCAL~~

**The beeper should sound after each entry.**

1. If the beeper beeped after each entry, go to step S.

2. If the beeper failed to sound after one or more of the above entries the Keyboard is not being read correctly, go to Service Group 11-C.

S. **Activate REF LVL: (Marker/Continuous Entry block)**

1. **Does the Reference Level readout increase when the ◯ is rotated clockwise?**

2. **Does the Reference Level readout decrease when the ◯ is rotated counter clockwise?**

   a. If the Reference Level readout changes correctly according to the above instructions, go to step T.

   b. If the Reference Level will not move or will only move in one direction, go to Service Group C and use the Front Panel Knob Troubleshooting Procedure.

T. **Press INSTR PRESET.**

**Narrow the Res BW to 3kHz. Is the "LOCAL OSC. UNLOCKED" message displayed on the CRT screen?**

1. If there is no LOCAL OSC. UNLOCKED message displayed, go to step U.

2. If the LOCAL OSC. UNLOCKED message is displayed, go to Service Group B.

U. **Decrease the Sweep Time one step with SWEEP TIME ⊡ . Is the front panel UNCAL indicator lighted?**

1. If the UNCAL light is on, go to step V.

2. If the UNCAL light is off, the LED or the LED driver is faulty. Go to Service Group C.

V. **Enter:**

SHIFT 610
INSTR PRESET
COUNTER .....ON
CF STEP SIZE .....1260.3Hz

The COUNTER reading (upper right of the CRT) should equal 72,017.1Hz ± .1Hz.

1. If the Counter reading is correct, go to step W.

2. If the Counter reading is incorrect, go to Service Group C.

W. **Set the 3585 controls as follows:**

Press PRESET to reoptimize the Sweep Time Coupling.
STOP FREQUENCY.....40.1MHz
MANUAL FREQUENCY.....20Hz
RES. BW.....30kHz

X. **Does the 3585 calibrate properly on each Res. BW setting (30kHz to 3Hz) with no calibration errors?**

1. If the 3585 calibrates properly in all Res. Bandwidths, go to step Y.

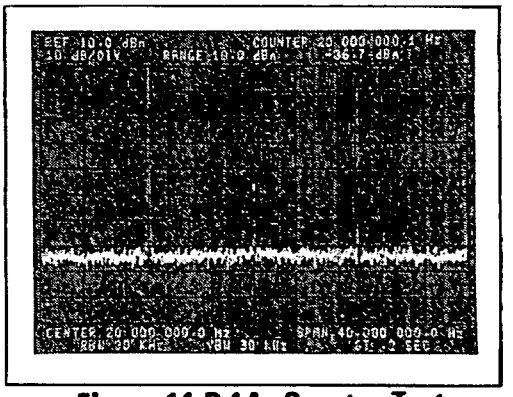


**Figure 11-P-14. Counter Test**

2. If calibration errors occur on some Bandwidths do the following:
   - Connect the Tracking Generator Output to the Terminated input.
   - Enter:
     PRESET (RBW-VBW-ST)
     MANUAL SWEEP
     OFFSET ..... on
     ENTER OFFSET
     COUNTER ..... on

   a. If the OFS COUNTER reading is $\leq \pm 1$Hz, the problem is in the IF section (Service Group A-3).

   b. If the OFS COUNTER reading is $> \pm 1$Hz the problem is in the Tracking Generator (Service Group E).

**NOTE**

*If the LOCAL OSC. UNLOCKED message occurs during this test, the A27 board may be out of adjustment.*

Y. **Enter a Manual frequency of 40.098765MHz; leave RBW set to 3Hz. Does the 3585 calibrate properly?**

1. If the 3585 Calibrates properly, go to step Z.

2. If the 3585 does not Calibrate properly, a Frequency Response problem exists on the Input board (Service Group A-1). The frequency response problem may be related to the Calibrator, Terminated Channel Attenuators, 11dB Gain Amp or the 40MHz Low Pass Filter.

Z. **Set the RBW to 30kHz. Rotate the Tracking Generator AMPLITUDE control fully *clockwise* (0dBm). Connect the Tracking Generator output to the front panel Terminated (50Ω) input. Did the 3585 automatically uprange to 0dBm (see Figure 11-P-15)?**

1. If the instrument upranged properly, go to step AA.

2. If the instrument did not uprange check the "Terminated" LED (below the

50Ω key), is it lit. If the Terminated LED is lit, the problem is in the Autorange circuit (Service Group A-1). If the Terminated LED is not lit the problem is in the Protection Circuit (Service Group A-1).

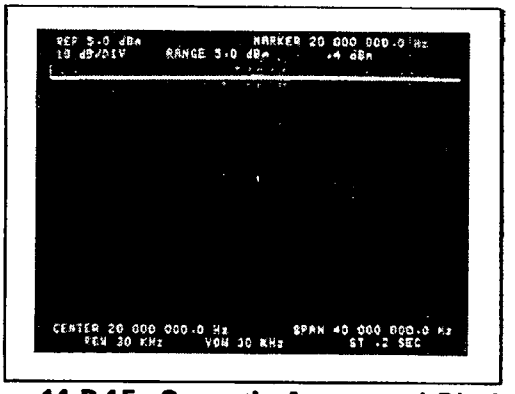


**Figure 11-P-15. Correctly Autoranged Displayed**

**AA. Is the Marker amplitude reading 0dBm ± 0.8dB?**

1. If the Marker reads 0dBm ± 0.8dB, go to step BB.

2. If the Marker reading is outside of the listed tolerance the A16 board Sample and Hold circuitry or the Tracking Generator Flatness may be causing the problem. If the output is consistantly low over the frequency range, or the amplitude increases by >0.5dB when placed in Manual Sweep, go to Service Group A-6 (A/D Converter). To check the Tracking Generator Flatness Enter:

   SHIFT 604
   INSTRUMENT PRESET
   RANGE ..... −25dBm
   REFERENCE LEVEL..... −20dBm
   dB/DIV ..... 1dB

   If the displayed trace is flat (−25dBm ± 0.5dB) then the problem is in the Tracking Generator, Service Group E. If the trace flatness is out of tolerance, either the Calibrator of the 41MHz Filter (Service Group A-1) is in error. Use a source of known amplitude with the 3585 in Test Mode 1 (Shift 601, Instrument Preset). If the amplitude accuracy checks out good with an external source, the Calibrator is probably at fault.

**BB. Decrement the RANGE to −5dBm (one step). Is the front panel OVERLOAD light on?**

1. If the OVERLOAD light is on, go to step CC.

2. If the OVERLOAD light is off the Autorange circuit is not operating correctly (Service Group A-1).

CC. **Reset the RANGE to 0dBm**
**Activate OFFSET; press ENTER OFFSET**
**Activate COUNTER**
**Force a calibration by entering SHIFT 4.**

DD. **Step the Res. BW from 30 kHz to 3Hz. On each Res. BW setting, allow time for the instrument to automatically calibrate. Then verify that the "OFS CNTR" frequency is 0Hz ± 1Hz, and the amplitude reading is 0dB ± 0.5dB (except 3Hz Res. BW = 0dB ± 2dB).**

1. If the OFS CNTR and Marker readings are within the specified limits, go to step EE.

2. If the OFS CNTR or Marker reading is out of the specified limits the problem is in the IF section (Service Group A-3) or the Tracking Generator D/A Converter (Service Group E).

EE. **Enter REFERENCE LEVEL dBV**
**Press ENTER OFFSET**
**Set the IMPEDANCE to 75Ω. Is the amplitude reading + 1.6dB ± 0.2dB?**

1. If the amplitude reading is correct, go to step FF.

2. If the amplitude reading is incorrect, the probable defect is the Impedance selection relay, A1K4 (Service Group A-1).

FF. **Enter: SHIFT 6 0 3; then press INSTR PRESET (Instrument Test Mode 03).**
**Set the 3585 controls as follows:**

| | |
|---|---|
| RANGE | +30dBm |
| REFERENCE LEVEL | +40dBm |
| CENTER FREQUENCY | 10MHz |
| FREQUENCY SPAN | 0Hz |
| RES. BW | 100Hz |
| VBW | 1Hz |
| SWEEP TIME | 20 seconds |
| SWEEP | SINGLE |
| MARKER/CONTINUOUS ENTRY | REF LVL |

**Clear the trace and reset the sweep by pressing CLEAR A.**

GG. **Start the sweep by pressing SINGLE.**

**Rotate ◯ slowly and *smoothly* in a counterclockwise direction to produce a linear ramp response similiar to the one shown in Figure 11-P-16.** If there are any significant discontinuities, cusps or "glitches" in the ramp, rotate ◯ clockwise until the beeper sounds, clear the trace by pressing CLEAR A and then repeat the test. Reappearance of the discontinuity indicates trouble in the IF gain switching (Service Group A-3) or video offset circuitry (Service Group A-5).

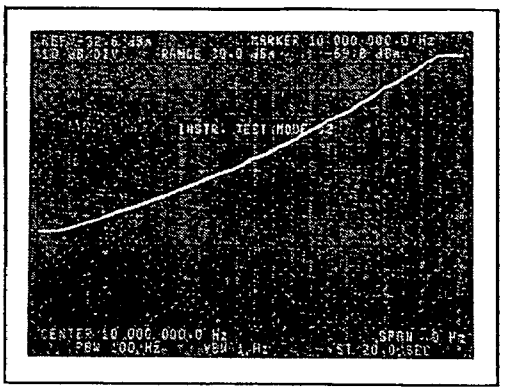


**Figure 11-P-16. IF Gain Test Display**

HH. **Rotate ◯ clockwise until the beeper sounds.**

**Set the Center Frequency to 20MHz and the Sweep Time to 30 seconds.**

**Clear the trace by pressing CLEAR A.**

**Start the sweep by pressing SINGLE.**

**Rapidly and smoothly rotate ◯ counterclockwise until the beeper sounds and then clockwise until the beeper sounds. Repeat until the end of the sweep to produce several ramp like responses as shown in Figure 11-P-17.** Discontinuities or cusps that appear at the same points on each of the responses, or the inability to obtain full-scale deflection indicates trouble in the IF gain switching (Service Group A-3) or video offset circuitry (Service Group A-5).

**NOTE**

*Ignore the glitches that appear at the positive and negative extremities of the responses.*

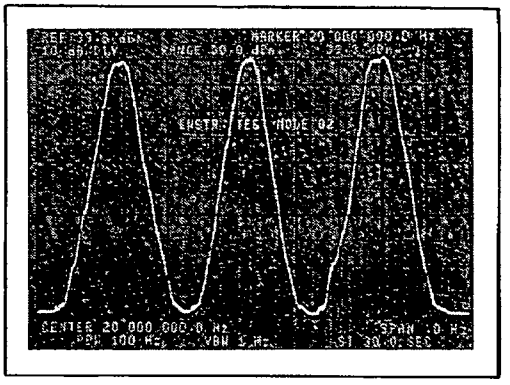


**Figure 11-P-17. IF Gain Test For FF**

II. **Press INSTR PRESET.**

**Set the RANGE and Reference Level to 0dBm (Auto. Range OFF).**

**Rotate the Tracking Generator AMPLITUDE control fully clockwise (0dBm).**

**Connect the Tracking Generator output to the 50-ohm Terminated input.**

**Adjust the Reference Level with REF LVL so that the Tracking Generator's response (at the Marker) is just below the top graticule line.**

**Press MKR → REF LVL.**

**Increment the Reference Level 5dB (one step) with REF LVL .**

**Store the trace in "B" by pressing STORE A → B.**

**Deactivate VIEW B; Activate A-B (see Figure 11-P-18).**

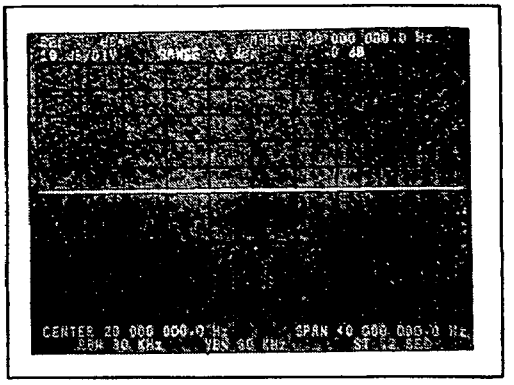

**Figure 11-P-18. dB/Div Amplifier Test Set-Up**

JJ. **With dB/DIV , decrement the Vertical Scale and verify that the Marker amplitude reading is within the following limits:**

| dB/DIV | Reading |
|---|---|
| 5dB | −2.5dB ± 0.2dB |
| 2dB | −4.0dB ± 0.2dB |
| 1dB | −4.5dB ± 0.2dB |

1. If the Marker Amplitude readings are correct, go to step KK.

2. If the Marker Amplitude readings are in error the problem is associated with the dB/DIV amplifier on the A15 board (Service Group A-5).

KK. **Disconnect the Tracking Generator from the Terminated input.**
**Press INSTR PRESET.**
**Set the Start Frequency to 1MHz.**
**Set the Sweep Time to 5 seconds.**
**Deactivate COUPLED TO SPAN.**

LL. **Adjust the Reference Level with REF LVL so that the noise is in the top vertical division of the CRT graticule.**
Set the Vertical Scale to 2dB/DIV.

Adjust the Reference Level so that the noise is approximately centered on the line below the Reference Level (see Figure 11-P-19).

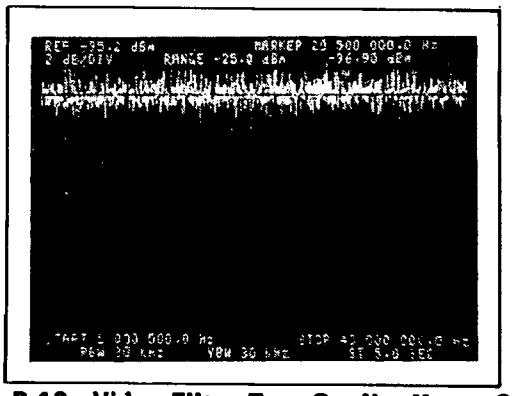


**Figure 11-P-19. Video Filter Test Set-Up, Upper Six VBW's**

MM. **Step the VBW from 30kHz to 100Hz and observe the changes in the noise level. Normal indications are as follows:**

| VBW | Noise Level |
|---|---|
| 10kHz | decreases by about one division |
| 3kHz | decreases by about 1.5 divisions |
| 1kHz | decreases by about 1 division |
| 300Hz | decreases by about 0.5 division |
| 100Hz | decreases by about 0.4 division |

1. If the noise level decreases in the specified manner, go to step NN.

2. If the noise level does not decrease or decreases too much at some settings the problem is in the Video Filter switching (Service Group A-5).

NN. **Move the noise to the top of the screen by adjusting the Reference Level.**
**Narrow the Vertical Scale to 1dB/DIV.**
**Set the Sweep Time to 10 seconds.**
**Adjust the Reference Level so that the noise is approximately centered on the line below the Reference Level (see Figure 11-P-20).**

OO. **Step the VBW from 100Hz to 1Hz and observe the changes in the noise level. Normal indications are as follows:**

| VBW | Noise Level |
|---|---|
| 30Hz | decreases by about 0.5 division |
| 10Hz | does not decrease significantly, but appears smoother |
| 3Hz | decreases by about 0.25 division and appears smoother |
| 1Hz | does not decrease significantly, but appears smoother |

1. If the noise level decreases in the specified manner, go to step PP.

2. If the noise level does not change in the expected manner the problem is in the Video Filter switching (Service Group A-5).

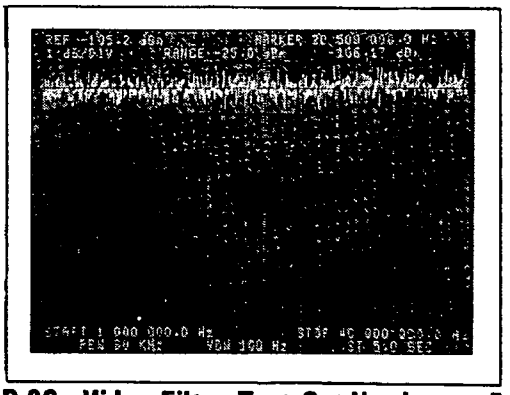

**Figure 11-P-20. Video Filter Test Set-Up, Lower Four VBW's**

**PP. Press INSTR PRESET.**
**Activate the LINE Trigger function. Is the SWEEPING light flashing?**

1. If the SWEEPING light is flashing, go to step QQ.

2. If the SWEEPING light is not flashing, go to the Line and External Trigger Troubleshooting portion of Service Group B-5.

**QQ. Activate the EXT Trigger function. Is the SWEEPING light off?**

1. If the SWEEPING light is off, go to step RR.

2. If the SWEEPING light is flashing, go to the Line and External Trigger Troubleshooting portion of Service Group B-5.

**RR. Does the SWEEPING light flash each time a short is placed across the EXT TRIGGER connector?**

1. If the SWEEPING light will flash, go to step SS.

2. If the SWEEPING light will not flash when a short is applied, go to the Line and External Trigger Troubleshooting portion of Service Group B-5.

**SS. Connect a 1MHz, 0dBm signal of known amplitude accuracy to the 3585 50Ω input. Be sure that the source is frequency locked to the 3585's 10MHz REF OUTPUT connector.**

**ENTER:**

INSTRUMENT PRESET
MANUAL ENTRY.....10MHz
MKR → CF
RANGE.....0dBm
AUTORANGE.....off

**This test checks the absolute amplitude accuracy of the instrument. The marker readout should be equal to 0dBm ±0.4dB** (this assumes that the sources output amplitude is exactly 0dBm).

1. If the amplitude measured is within tolerance, go to step TT.

2. If the measured amplitude is out of tolerance either the instrument needs adjustment or the Calibrator (Service Group A-1) is not working properly.

**TT. Set the 3585 for:**

RES. BW.....10Hz
VIDEO BW.....1Hz
OFFSET.....on
ENTER OFFSET

**Decrement the source's amplitude in 5dB steps from 0dBm to −75dBm. Observe the Marker amplitude reading. It should follow the source's amplitude setting ± the tolerances shown below.** (Use a source which has a very accurate attenuator or use a calibrated external attenuator to attenuate your source's output.)

Source Amplitude (referred to Reference Level)

| 0dB | −20dB | −50dB | −80dB |
|---|---|---|---|
| ±0.3dB | ±0.6dB | ±1.0dB | |

1. If the readings are within the specified tolerance, go to step UU.

2. If the readings are not within the specified tolerance the problem lies within the Log Amplifier circuitry. Minor problems can be remedied by adjustment of the Log Amp Linearity, larger problems should be addressed with Service Group A-4.

**UU. If the instrument has checked good to this point and your problem is specifically related to Distortion or Spurious Responses, go to Service Group H. Otherwise, your instrument is basically working correctly. Specific problems should be checked with the individual Service Groups.**

# SERVICE GROUP A

## RF/IF

### Board Numbers A1-A16

**INDEX:**



**EQUIPMENT REQUIRED:**

| Instrument | Required Characteristics | Recommended Model No. | Service Group Usage |
|---|---|---|---|
| Digital Multimeter | 4½ digits<br>dc Accuracy ±0.05% ±3 digits<br>ohms Accuracy ±0.08% ±2 digits | HP 3466A | A-1,2,3,5,6 |
| Oscilloscope | Bandwidth - dc to 100MHz<br>Vertical Sensitivity 0.005V/Div | HP 1740 | A-1,3,4,6 |
| dc Power Supply | Regulated, variable ±15V output voltage/ current monitor ≈200mA current limit | HP 6216C | A-1 |
| Spectrum Analyzer | Frequency - 0.1 to 500MHz<br>Amplitude Accuracy - ±3dB | HP 8568B | A-1 |
| Frequency Synthesizer | Frequency 200Hz to 40MHz<br>Amplitude Accuracy ±0.25dB into 50Ω | HP 3335A | A-1,2,3,4 |
| Resistor Probe | 20:1 resistive divider 1kΩ input resistance | HP 10020A | A-2 |
| Digital Signature Analyzer | | HP 5006A | A-3,5 |
| Divider Probe | Divider ratio 1:1 shunt Capacitance ≤ 40 pF | HP 10021A | A1,3,4,6 |
| Resistor | 20kΩ ±1%, 1/8 W | HP P/N 0757-0449 | A-5,6 |
| Resistor | 1kΩ ±1%, 1/8 W | HP P/N 0757-0280 | A-6 |

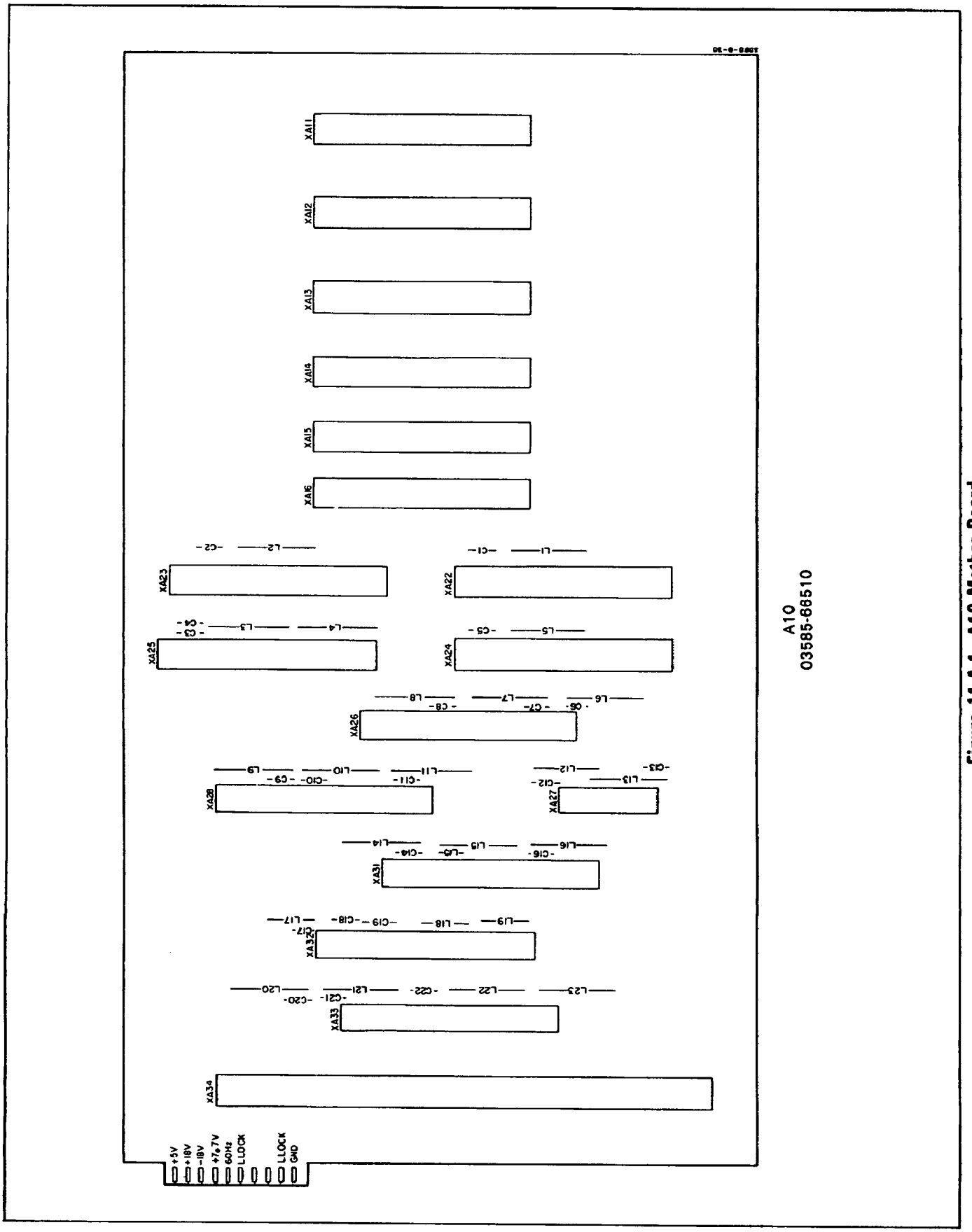


Figure 11-A-1. A10 Mother Board

# SERVICE GROUP A-1
# INPUT SECTION

## Board No. A1
## Part Number 03585-66501

**INDEX:** **Page**



**ADJUSTMENTS:**

| Component | Adjusted Parameter | Paragraph Location |
|---|---|---|
| A1R110 | Bias for 11dB Gain Amp | 5-45 |
| A1R52 | Calibrator Output Symmetry | 5-36 |
| A1R131 | 41MHz Filter Flatness | 5-36 |
| A1C83 | 41MHz Filter Flatness | 5-36 |
| A1L18 | 41MHz Filter Flatness | 5-36 |
| A1C86 | 41MHz Filter Flatness | 5-36 |
| A1L19 | 41MHz Filter Flatness | 5-36 |
| A1C89 | 41MHz Filter Flatness | 5-36 |
| A1L21 | 41MHz Filter Flatness | 5-36 |
| A1C92 | 41MHz Filter Flatness | 5-36 |
| A1R173 | Autorange Range Up Threshold | 5-37 |
| A1R174 | Autorange Range Down Threshold | 5-38 |
| A1R39 | Calibrator Output Level | 5-40 |
| A1R108 | High Impedance Channel Level Match | 5-41 |
| A1C21 | 1MΩ 20 dB Attenuator 1 Matching | 5-42 |
| A1C27 | 1MΩ 20 dB Attenuator 2 Matching | 5-42 |
| A1C18 | Input Capacitance | 5-43 |
| A1R170 | LO Feedthrough | 5-44 |

**TROUBLESHOOTING NOTES:**

None

**INPUT/CONVERSION SECTION REMOVAL**

a. Set the 3585 LINE Switch to off.
b. Place the instrument on its left side.
c. Remove the bottom cover.
d. Remove the cables, to the Input/Conversion box.

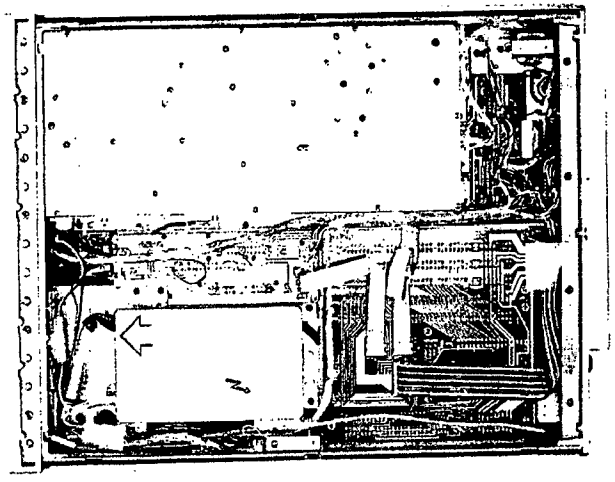

f. Remove the seven mounting screws.

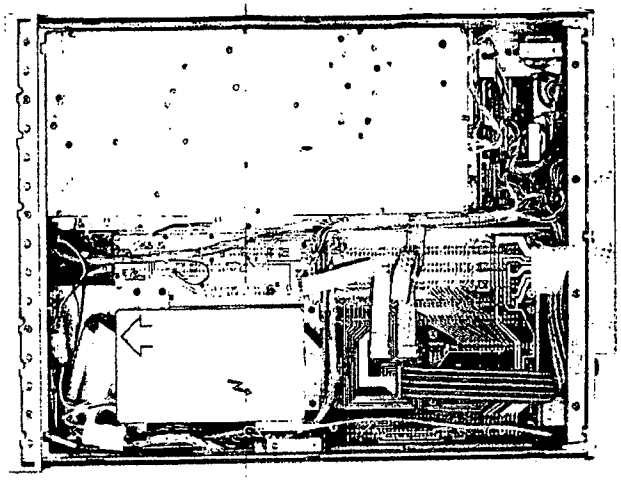

e. Place a stack of books, approximately eight inches high, next to the instrument. These books will be used to support the Input/Conversion Section.

**WARNING**

*Use caution when working near the High Voltage portion of the instrument.*

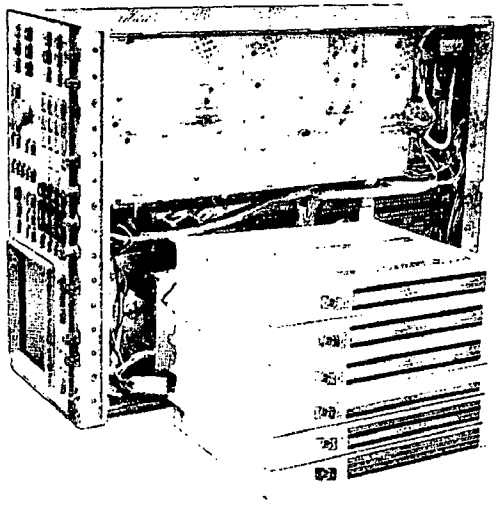

g. The Input/Conversion Section of the instrument is now free. If necessary the covers may be removed. To work on the Conversion Section, place the Input/Conversion box as shown in the photo on the left. To work on the Input Section, place the Input/Conversion box as shown in the photo on the right. Reconnect all cables for proper operation after positioning the Input/Conversion box.

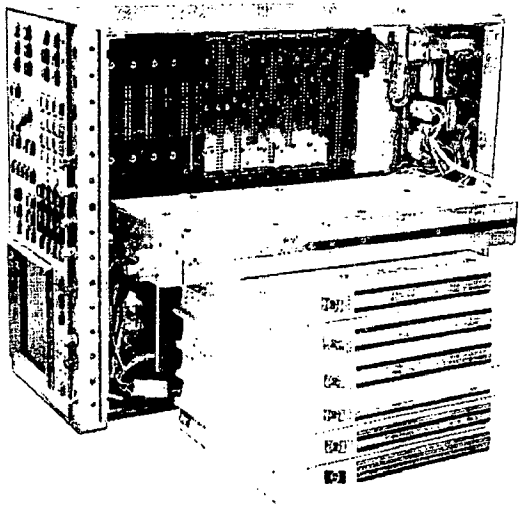

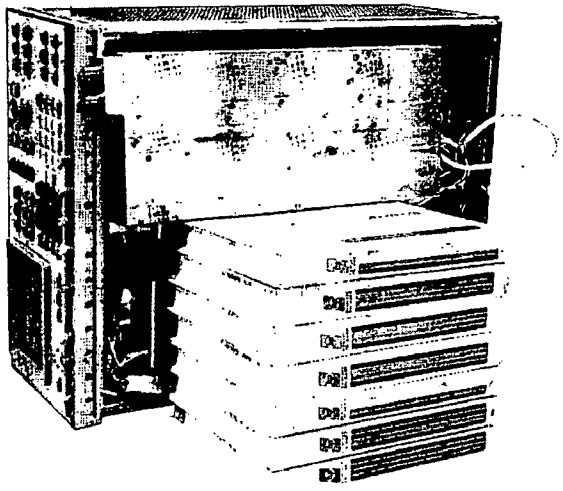

Figure 11-A-1-1. Input/ Conversion Section Removal

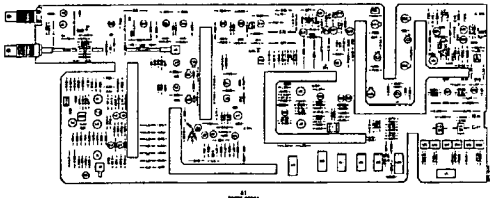

A1

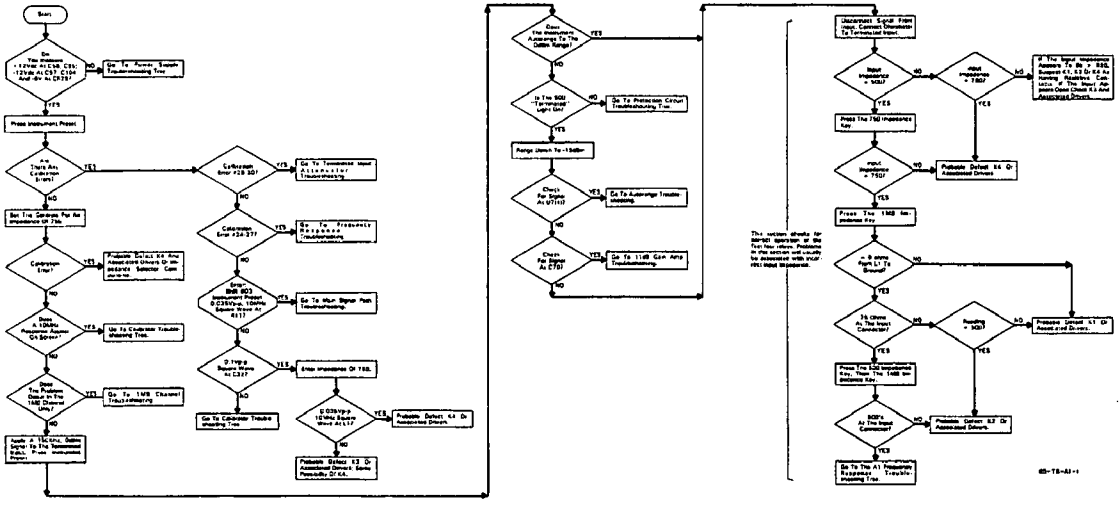

85-TS-A1-1

Input Section (A1) Troubleshooting Tree

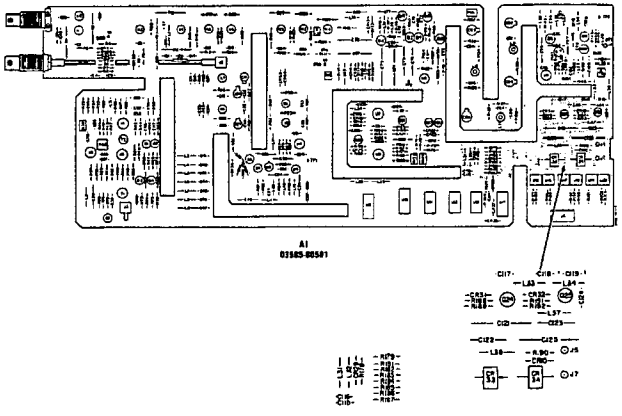


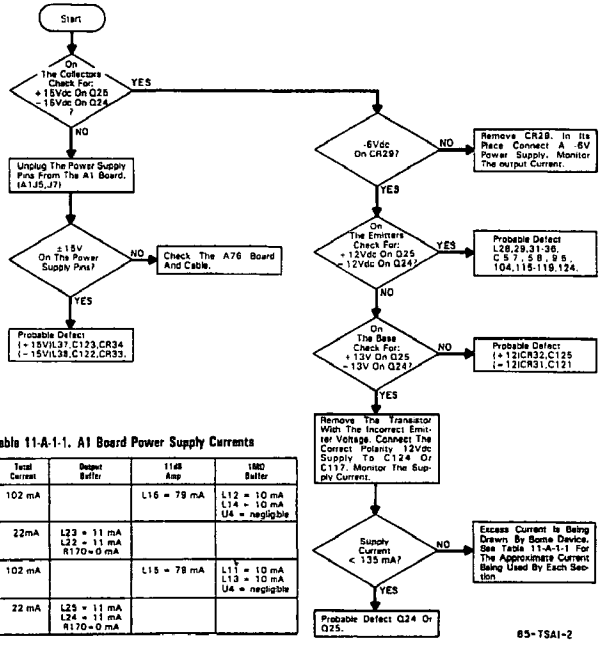


**Table 11-A-1-1. A1 Board Power Supply Currents**

| Supply Voltage | Total Current | Output Buffer | 11kB Amp | 1MHD Buffer |
|---|---|---|---|---|
| $+12V_1$ | 102 mA | | L16 = 79 mA | L12 = 10 mA<br>L14 = 10 mA<br>U4 = negligible |
| $+12V_2$ | 22mA | L23 = 11 mA<br>L22 = 11 mA<br>R170 = 0 mA | | |
| $-12V_1$ | 102 mA | | L15 = 79 mA | L11 = 10 mA<br>L13 = 10 mA<br>U4 = negligible |
| $-12V_2$ | 22 mA | L25 = 11 mA<br>L24 = 11 mA<br>R170 = 0 mA | | |

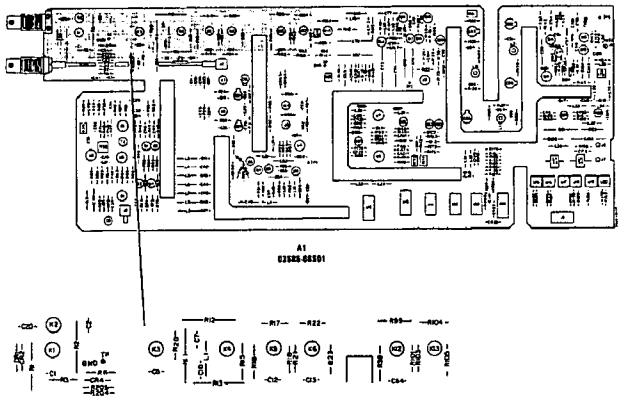


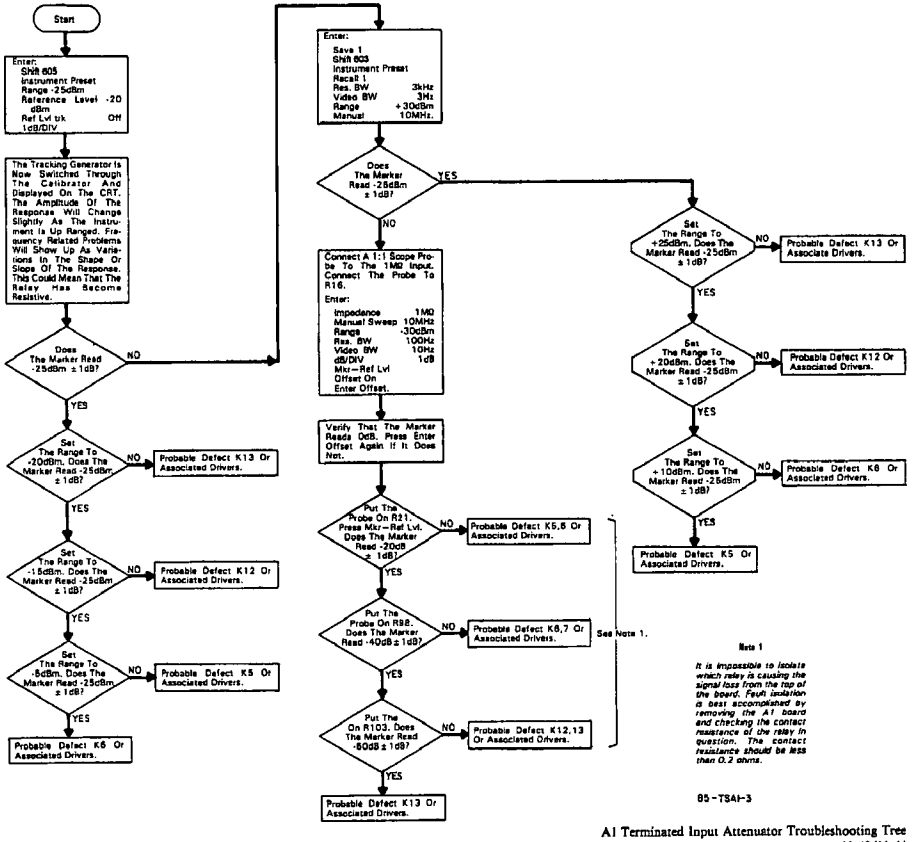


A1 Terminated Input Attenuator Troubleshooting Tree

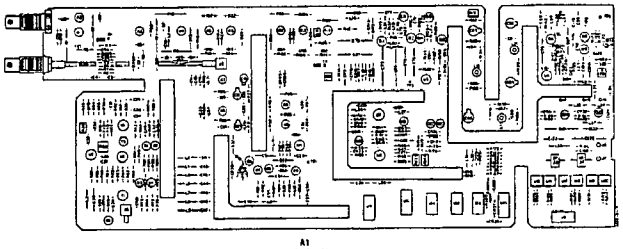

A1
03588-88561

## A1 Frequency Response Troubleshooting Tree

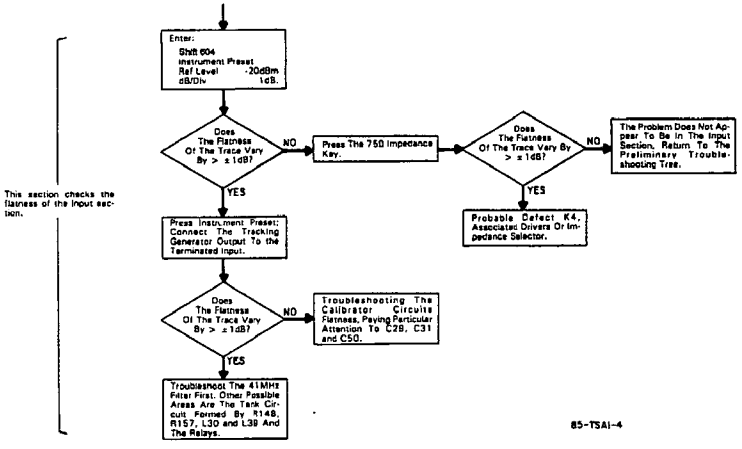

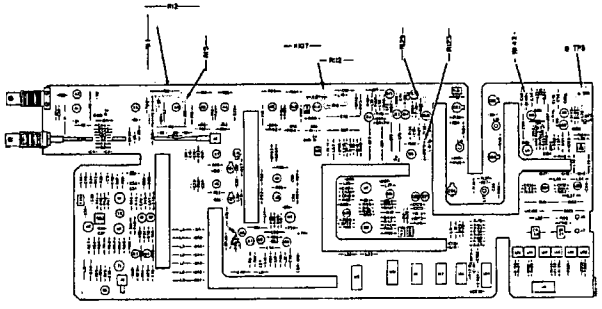


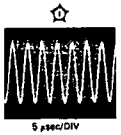

5 µsec/DIV

0.01 volts/DIV

dc Coupled

5 µsec/DIV

0.5 volts/DIV

5 µsec/DIV

0.01 volts/DIV

5 µsec/DIV

0.01 volts/DIV

0.1 µsec/DIV

0.005 volts/DIV

**NOTE**

*Refer to the component locator and schematic for locations.*

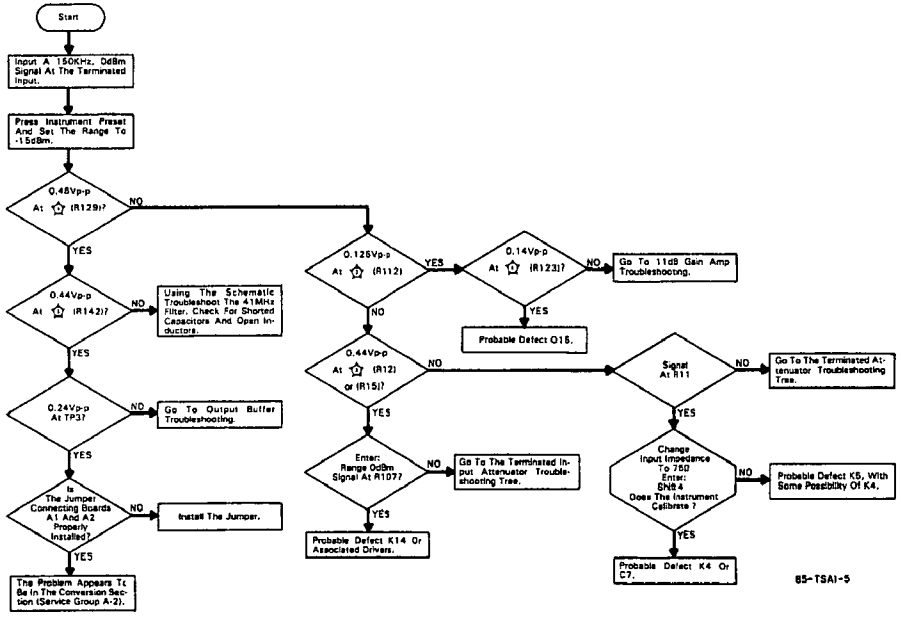


A1 Main Signal Path Troubleshooting Tree

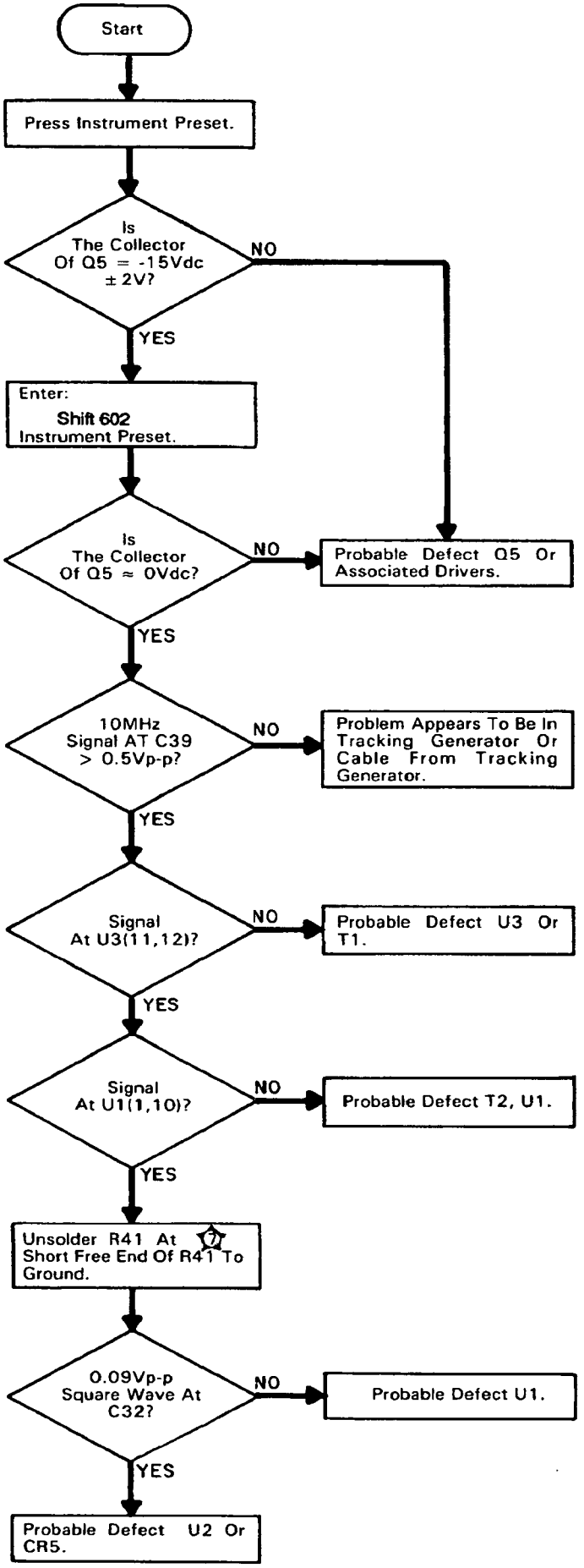


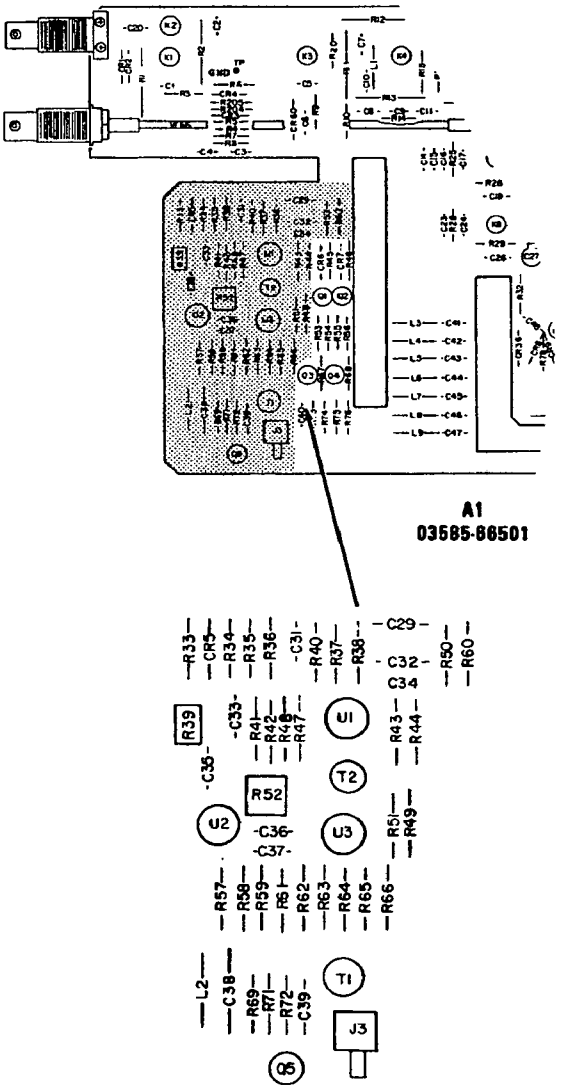


A1 Calibrator Troubleshooting Tree
11-49/11-50

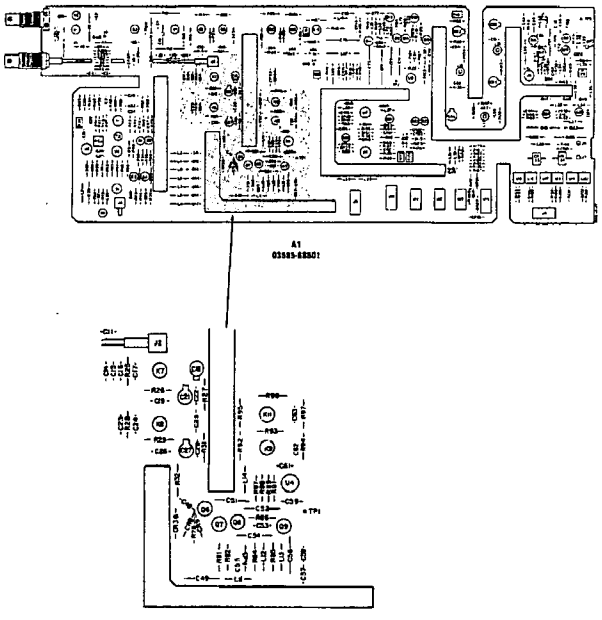


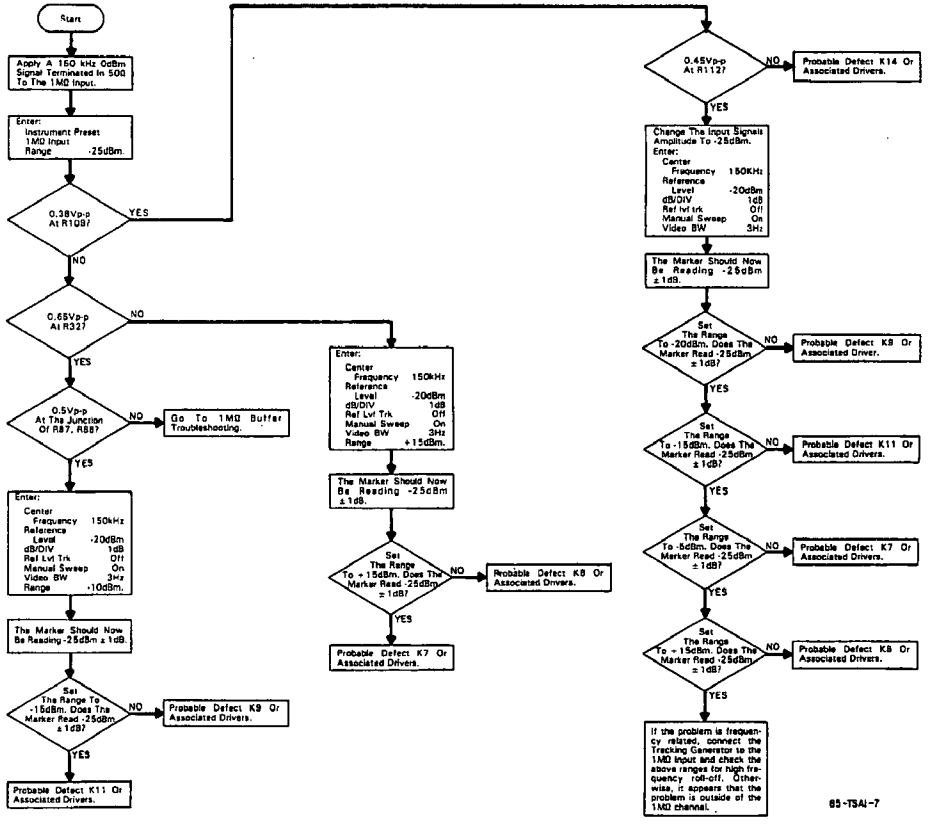


A1 1M Ohm Channel Troubleshooting Tree

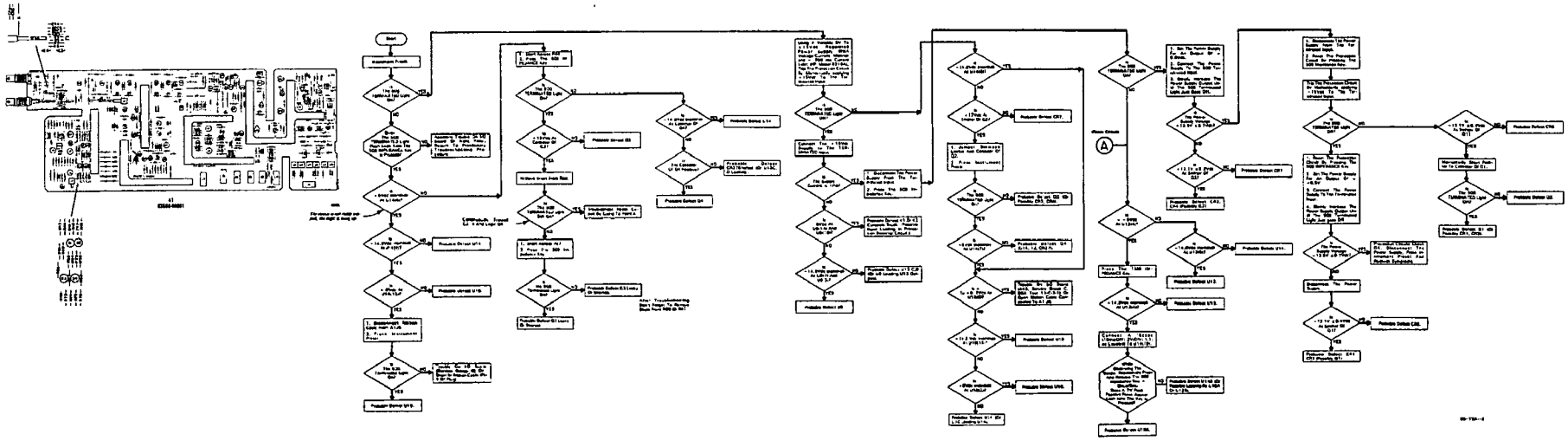

A3 Protection Circuit Troubleshooting Tree
(1-53/1-54)

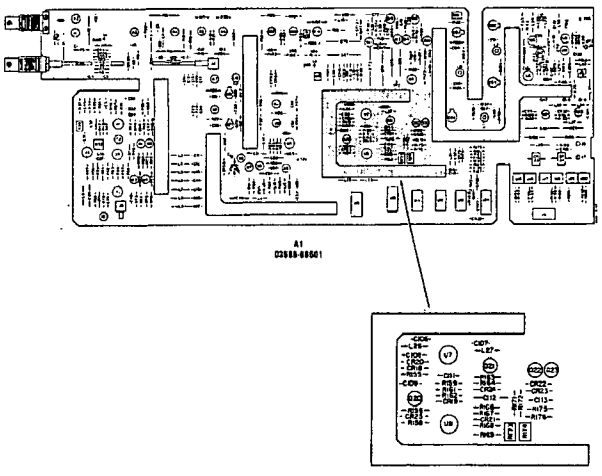


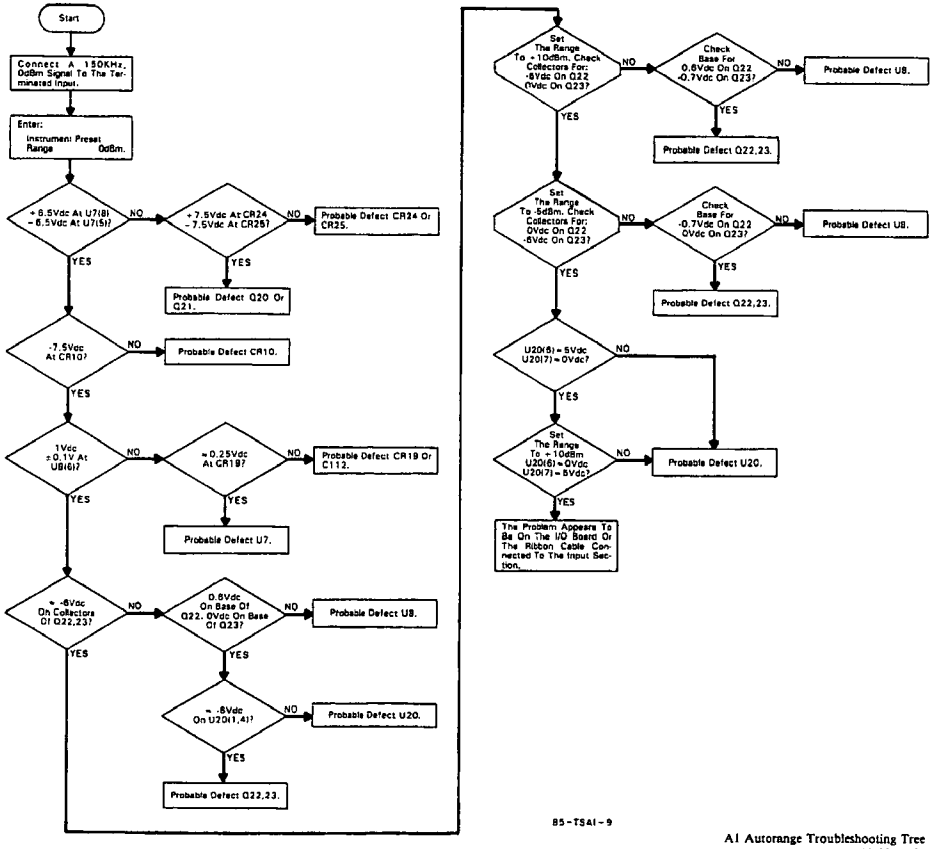


85-TSA1-9

A1 Autorange Troubleshooting Tree
11-55/11-56

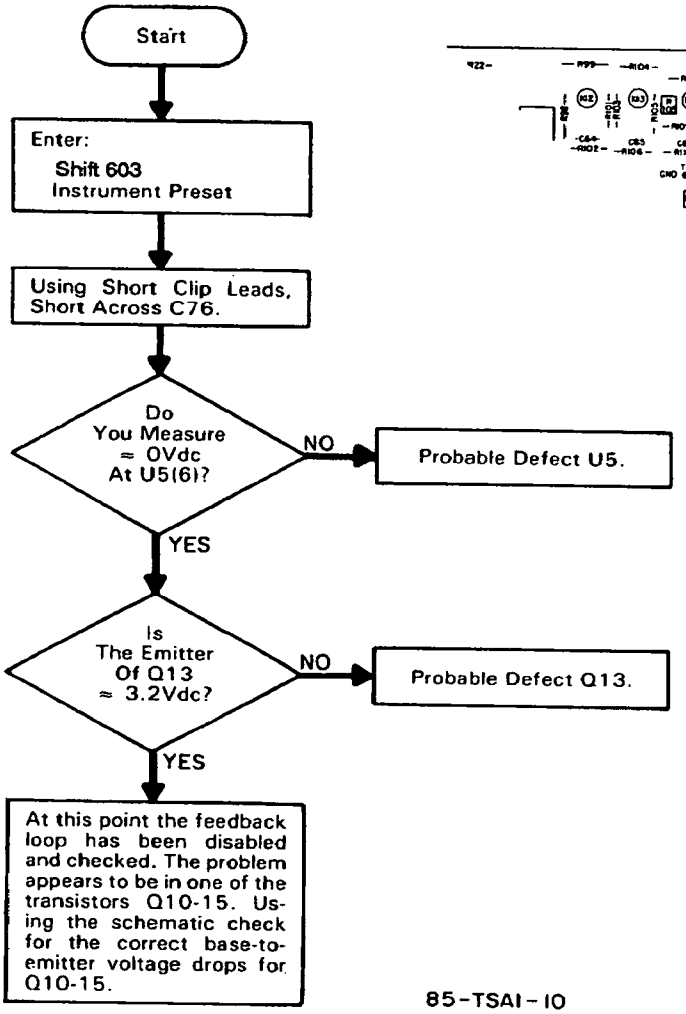


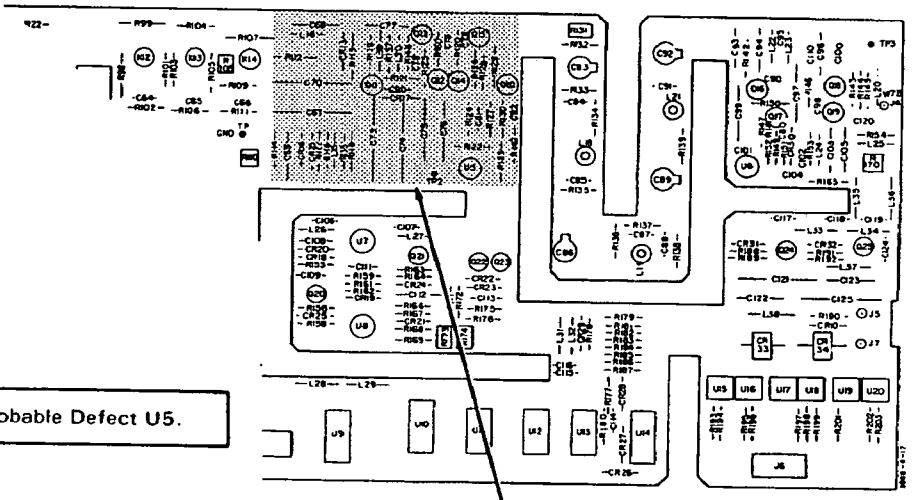

A1
03585-66501

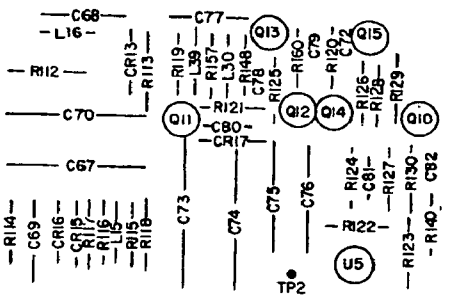


85-TSAI-10

A1 11dB Gain Amp Troubleshooting Tree

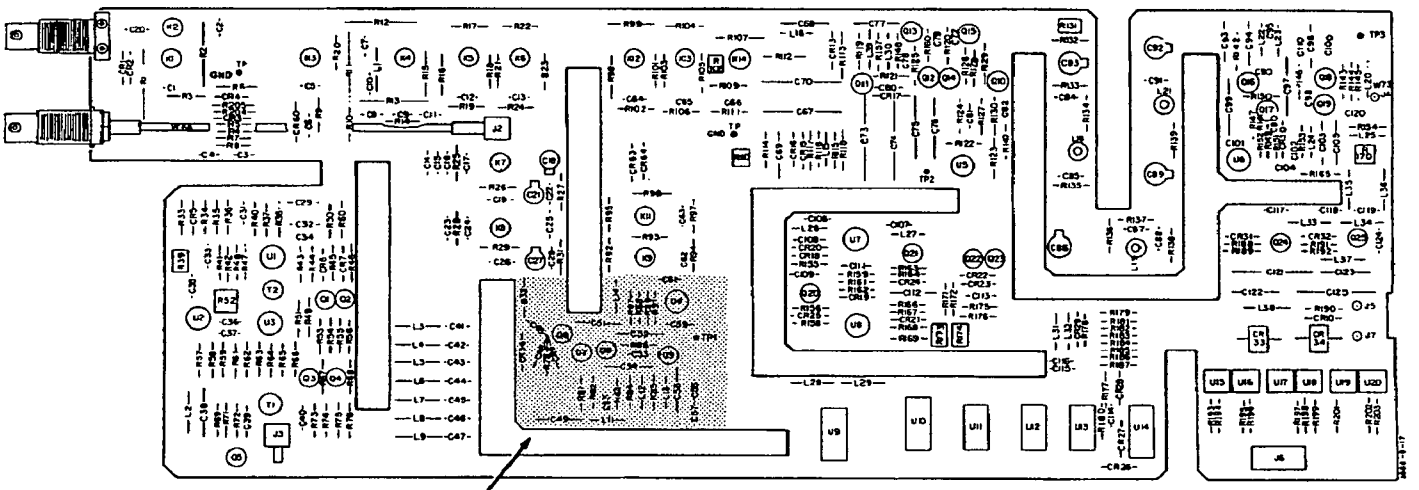

A1
03585-66501

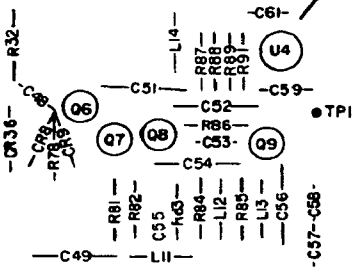


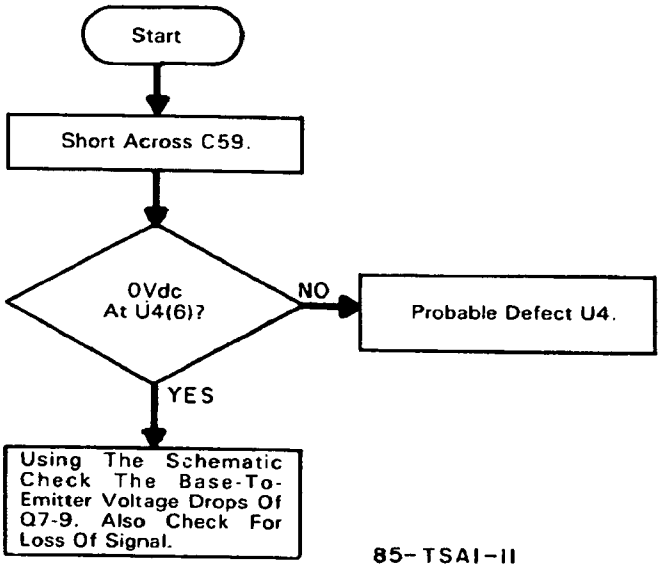


85-TSAI-II

A1 1M Ohm Buffer Troubleshooting Tree

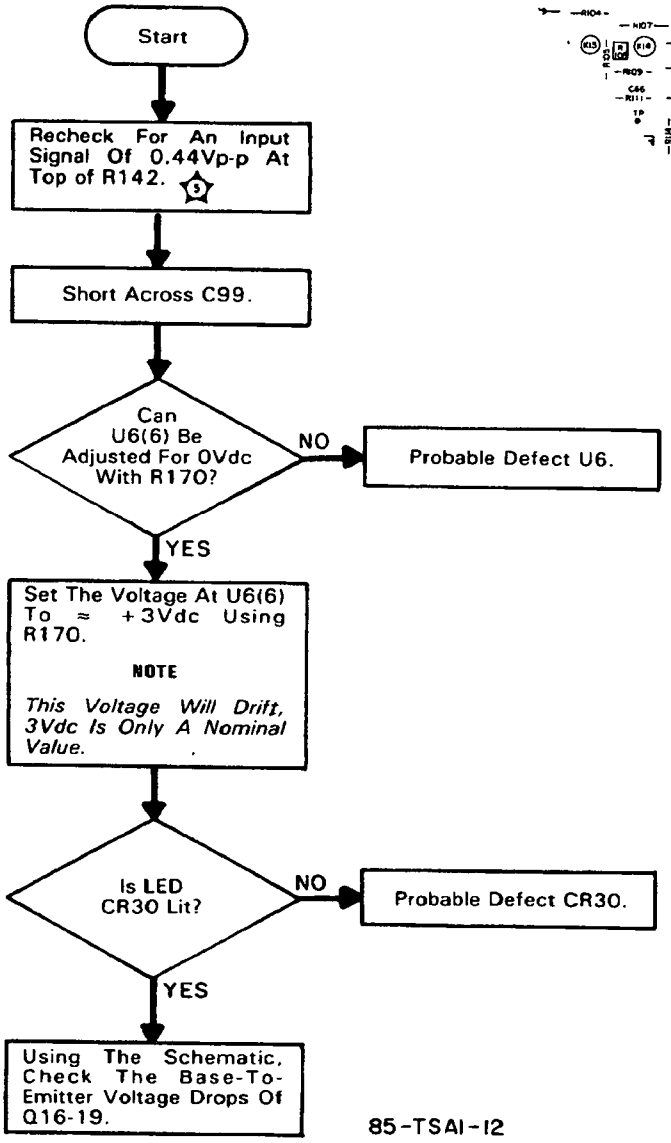


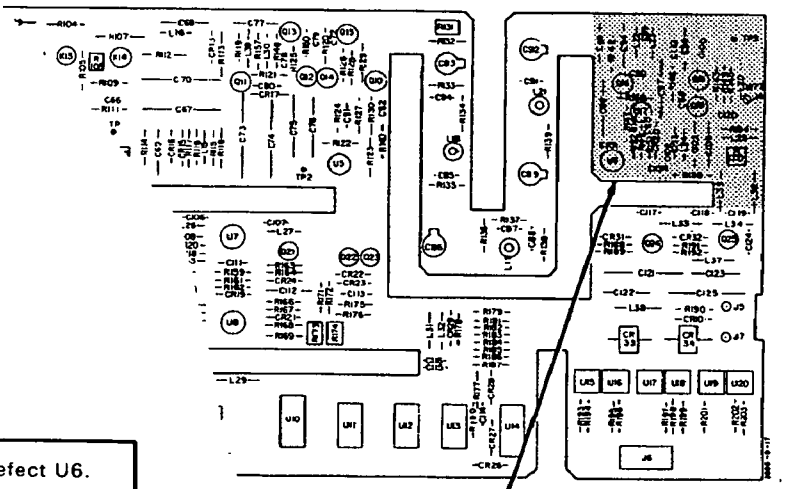

A1
03585-66501

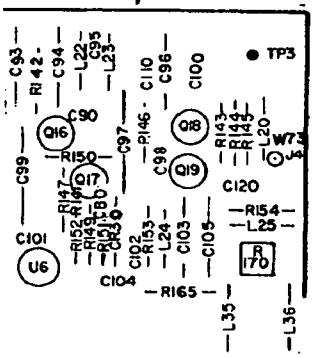


5

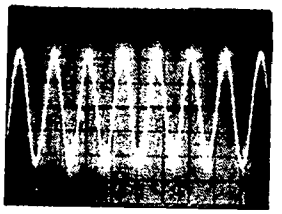

0.1 μsec/DIV

0.005 volts/DIV

A1 Output Buffer Troubleshooting Tree

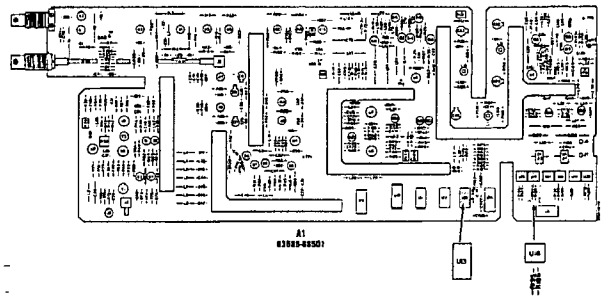


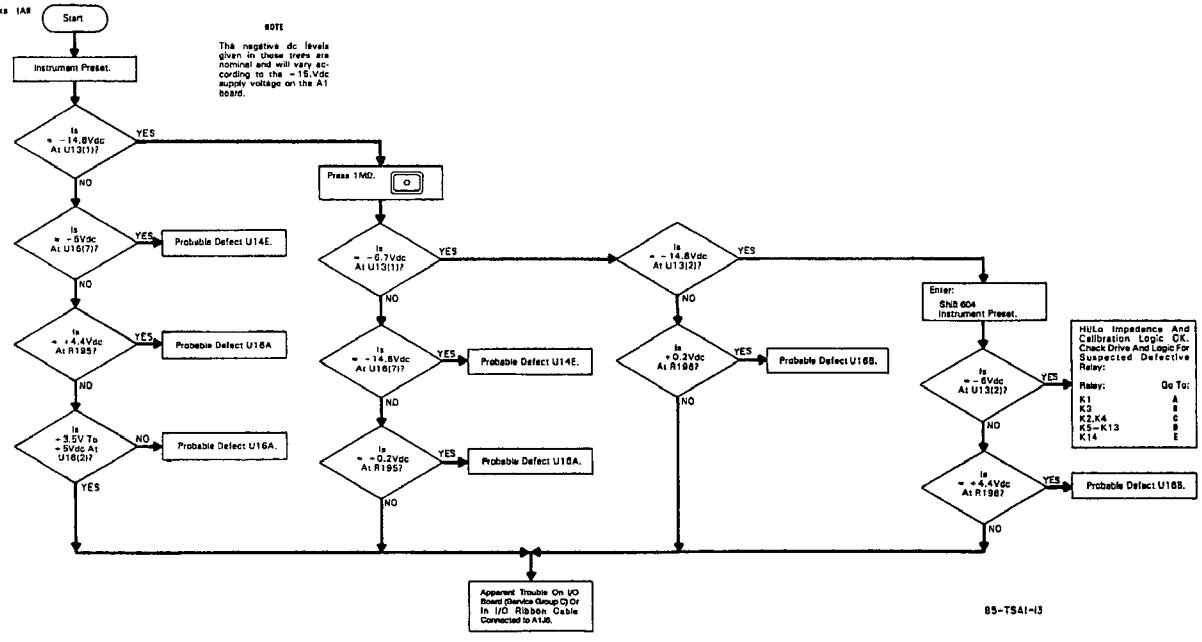


A1 I/O, Logic and Relay Drive Troubleshooting Tree
11-61/11-62

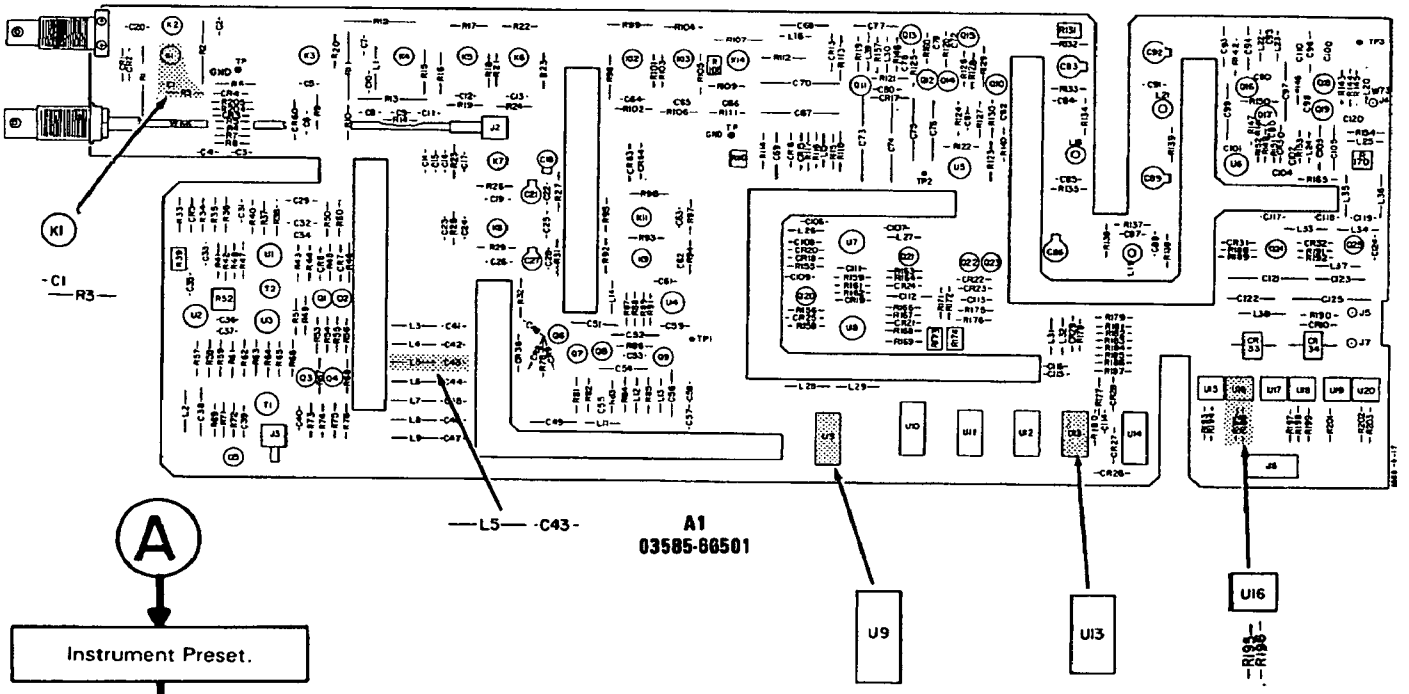


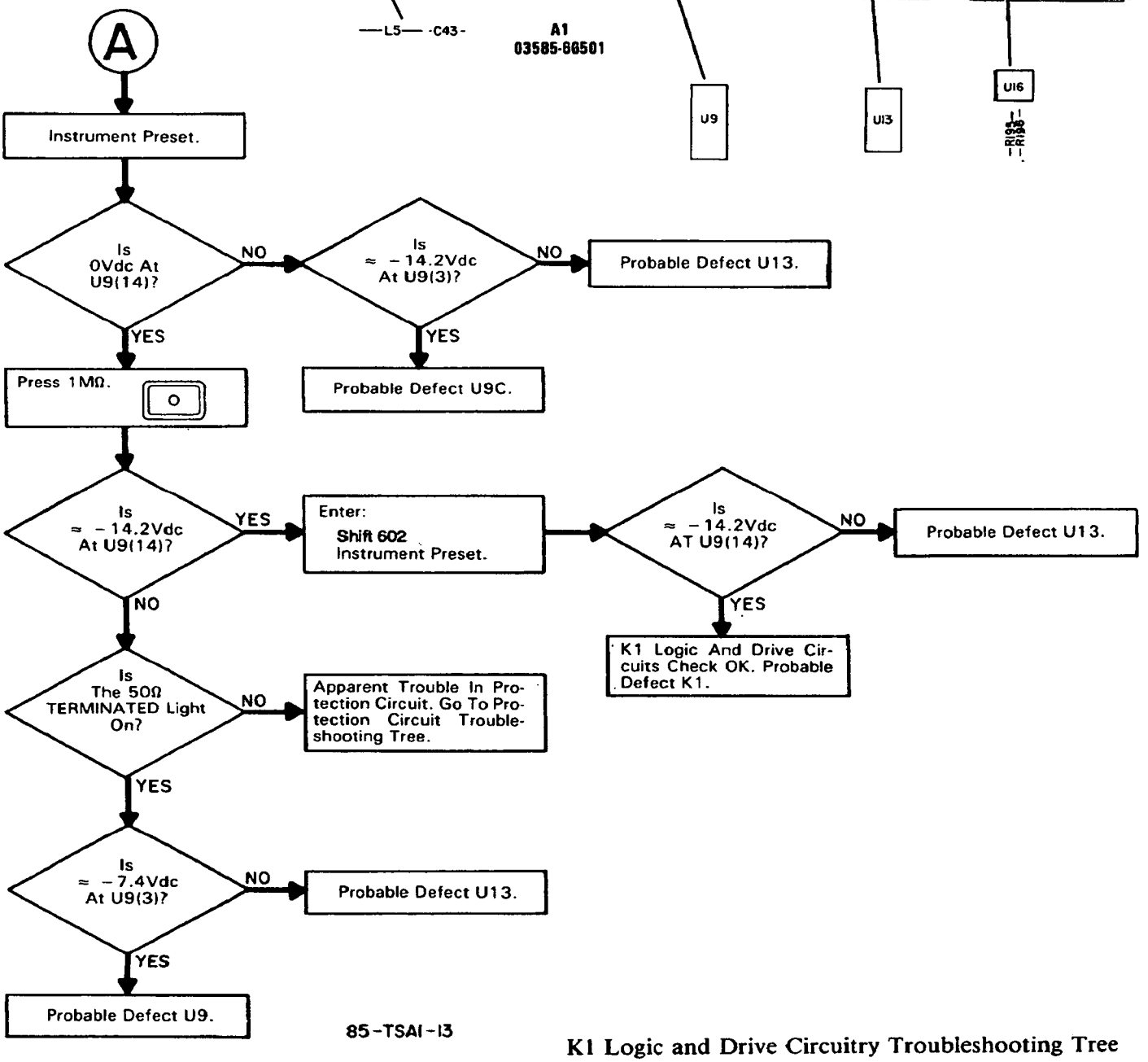


85-TSAI-13

K1 Logic and Drive Circuitry Troubleshooting Tree

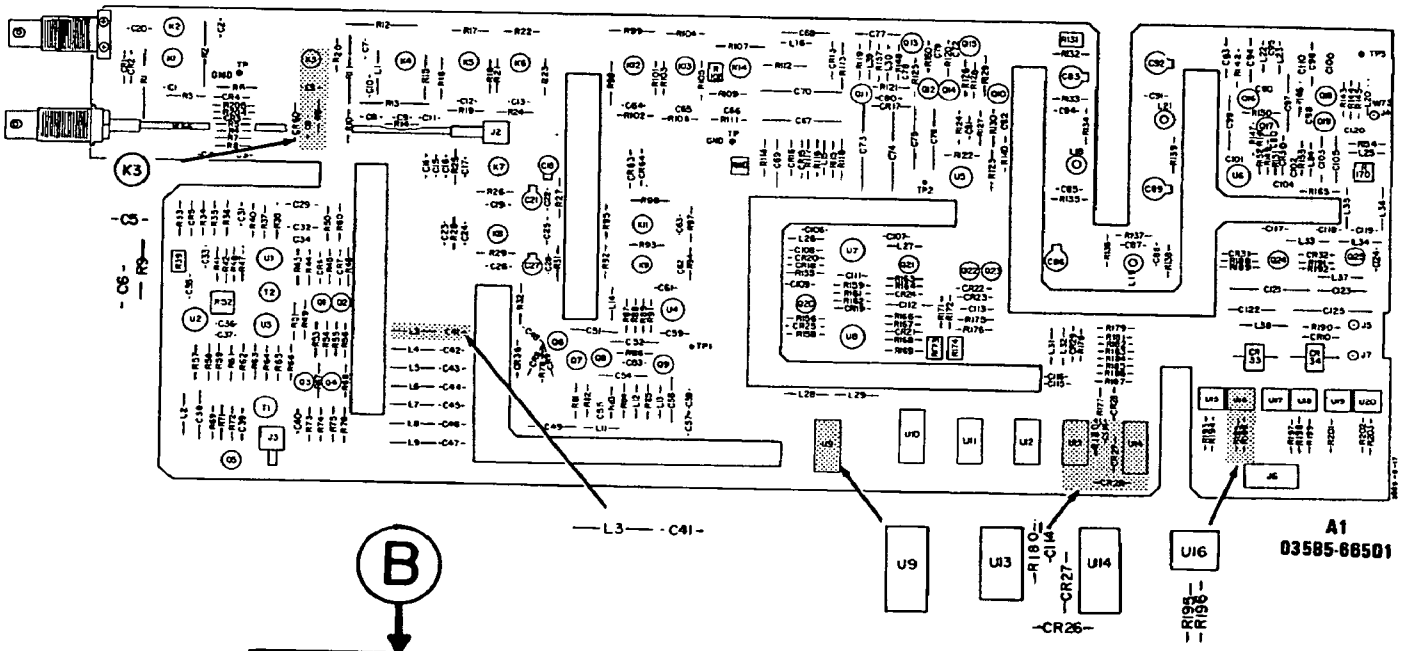


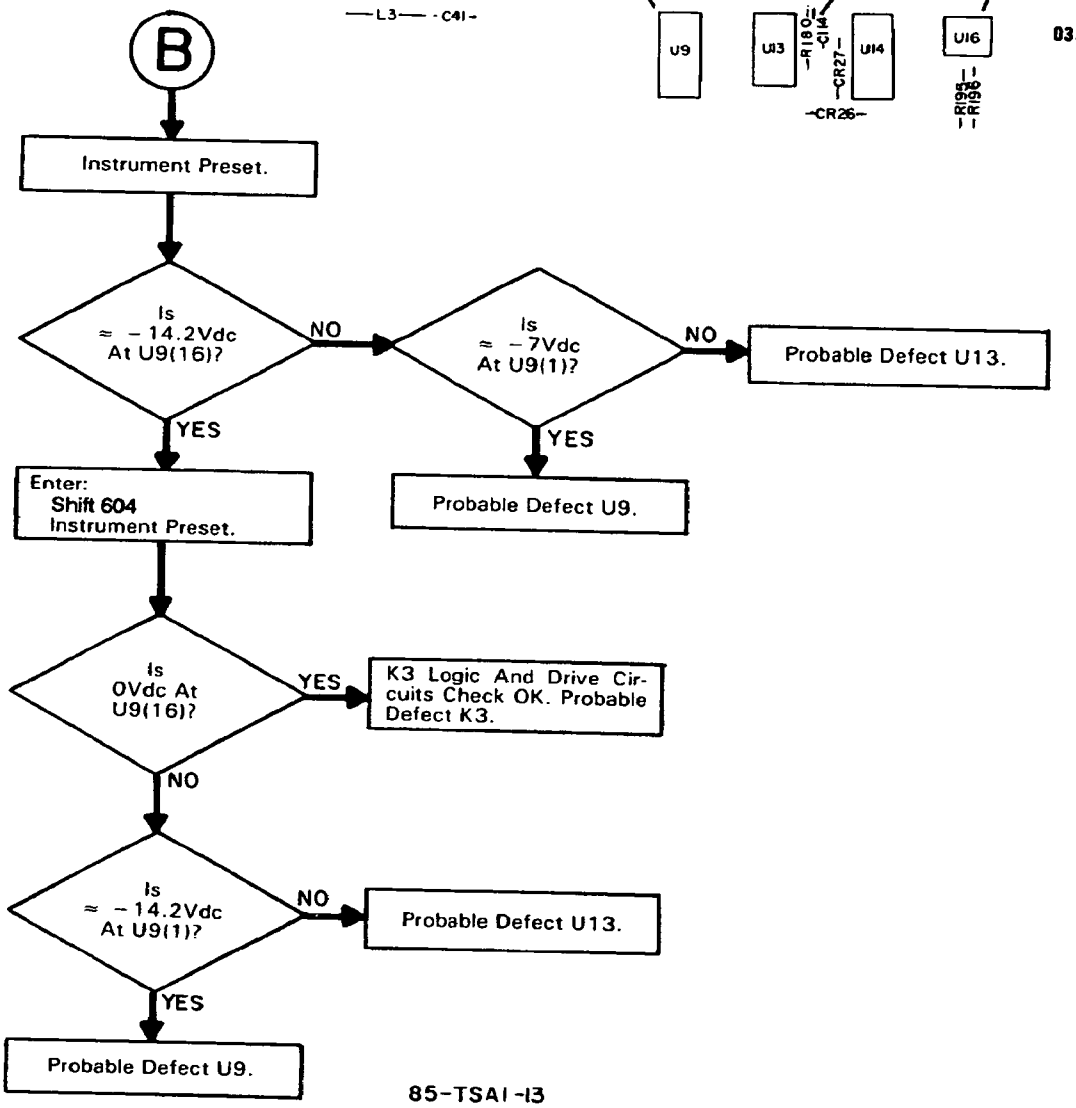


K3 Logic and Drive Circuitry Troubleshooting Tree

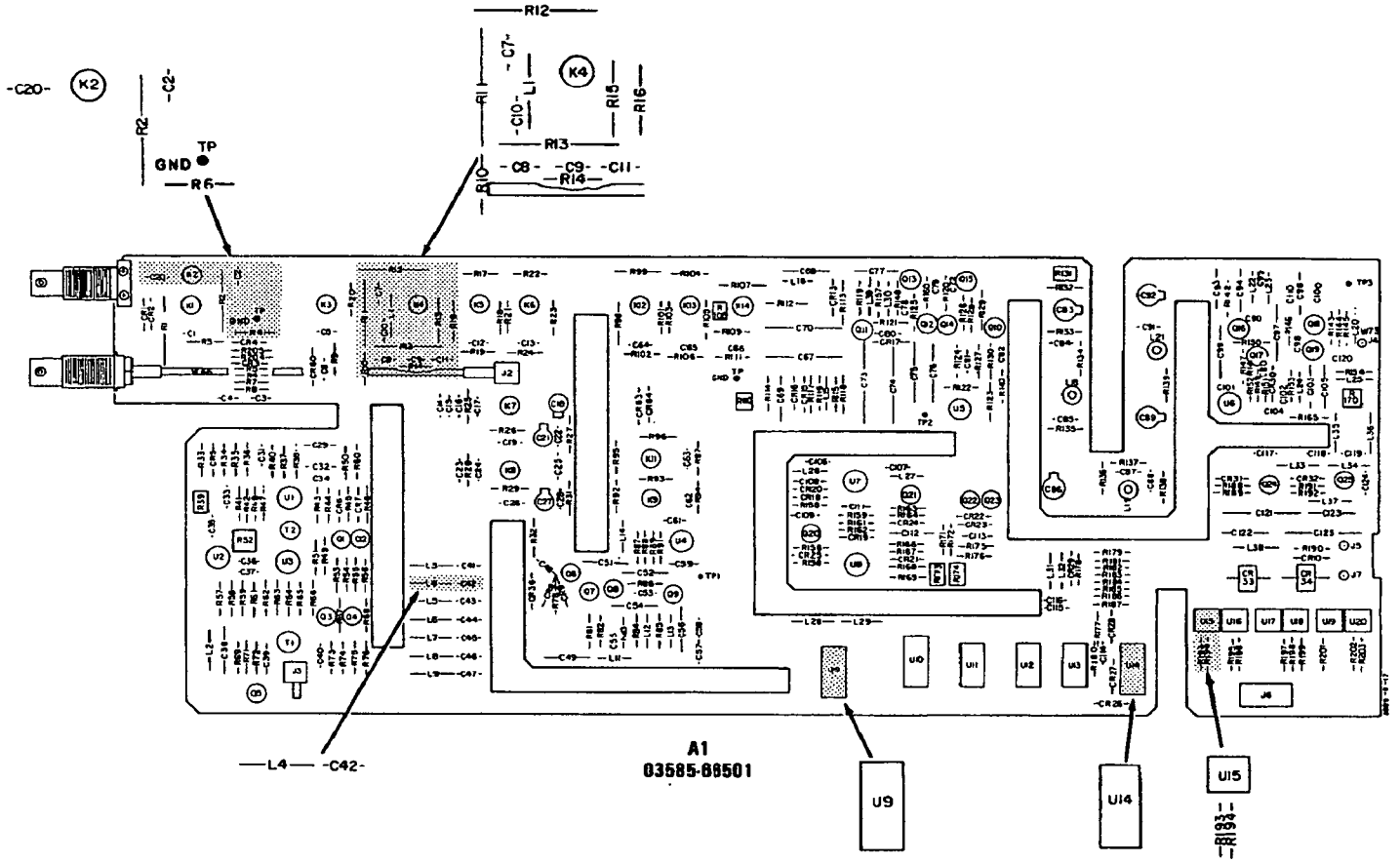
R12
C7
K2
C20
C2
K4
R1
L1
C10
R15
R16
R13
TP
GND
R6
R10
C8
C9
C11
R14
L4
C42
A1
03585-66501
U9
U14
U15
R193
R194

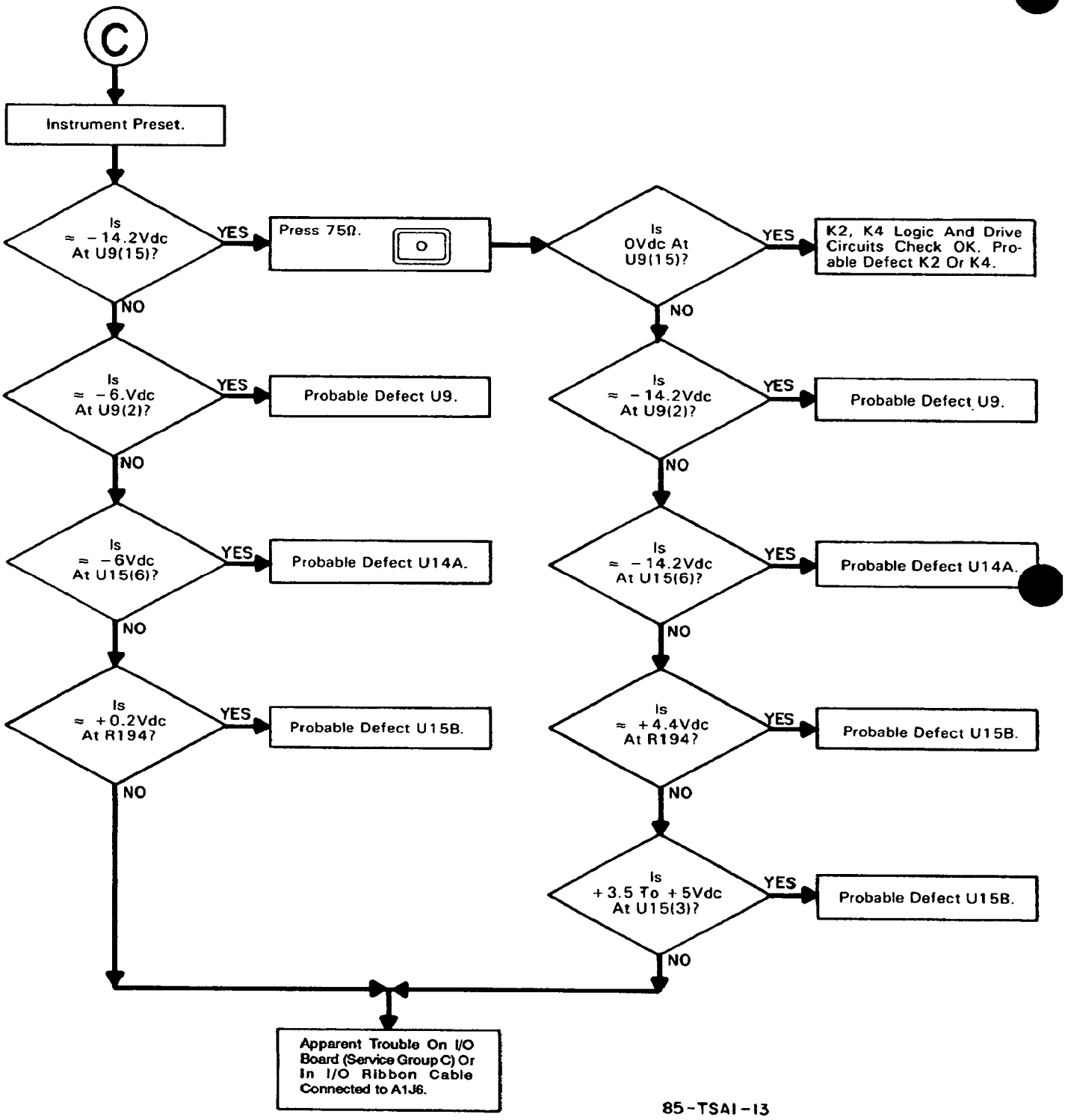


K2, K4 Logic and Drive Circuitry Troubleshooting Tree

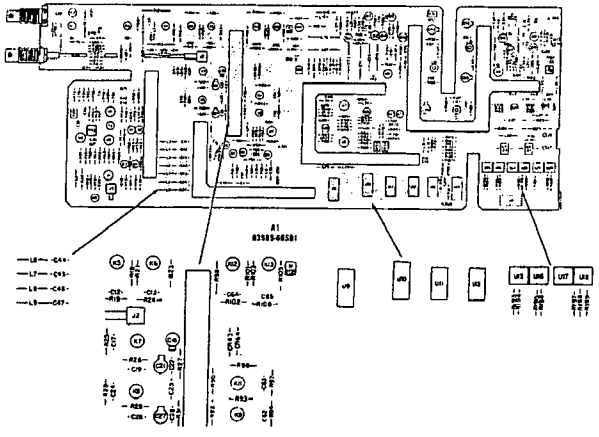


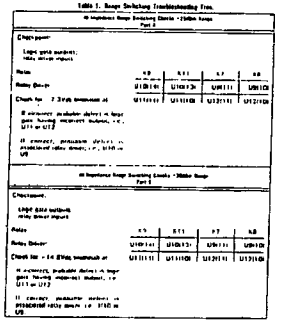

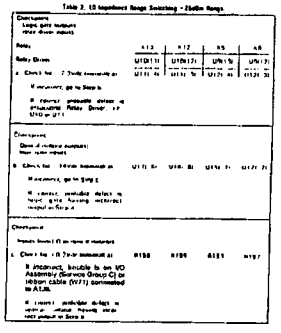

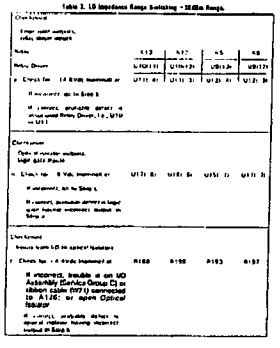

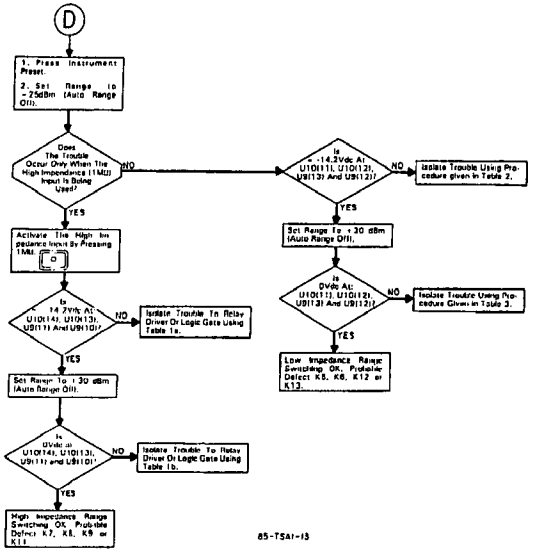


Range Switching (K5 → K13) Logic and Drive Circuitry troubleshooting Tree

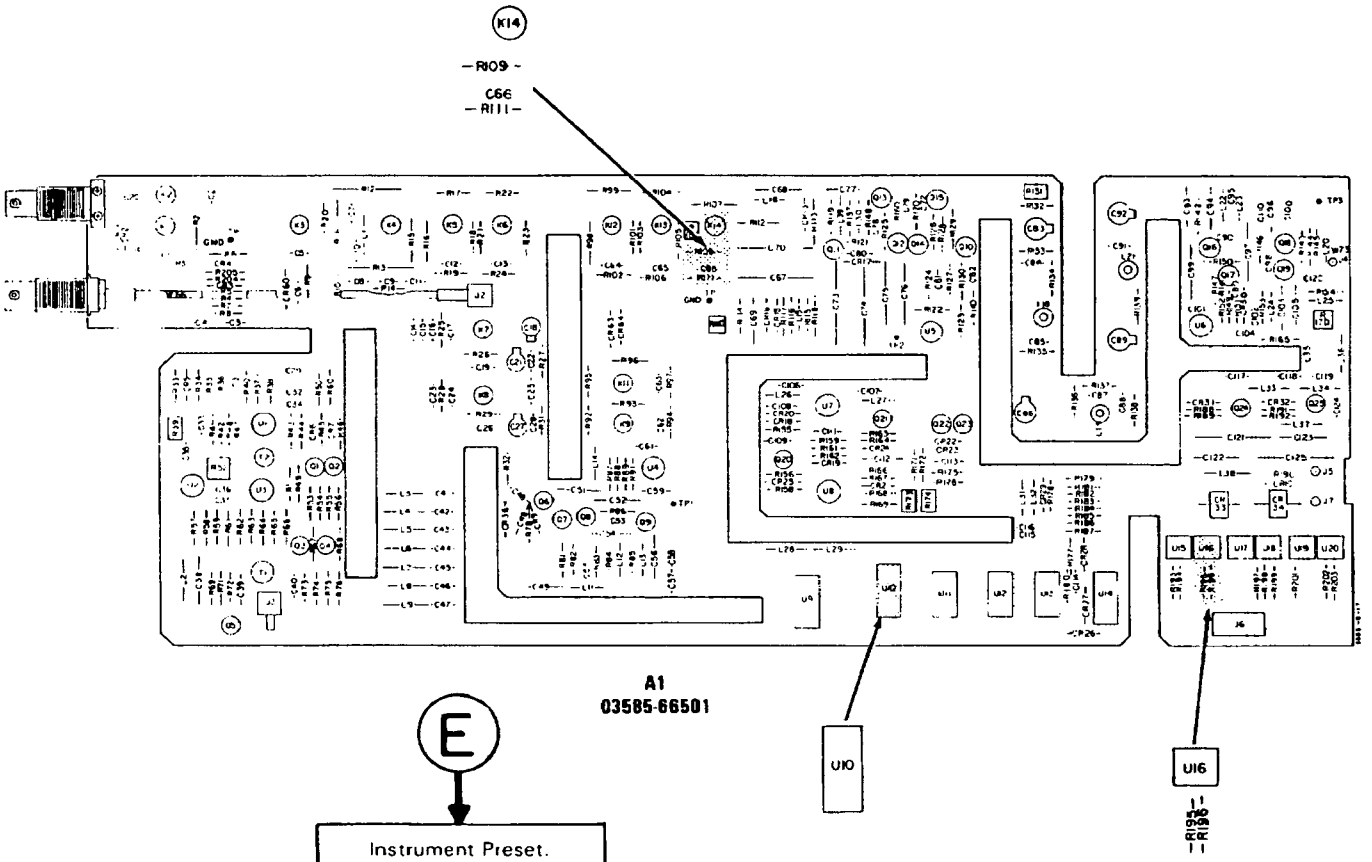


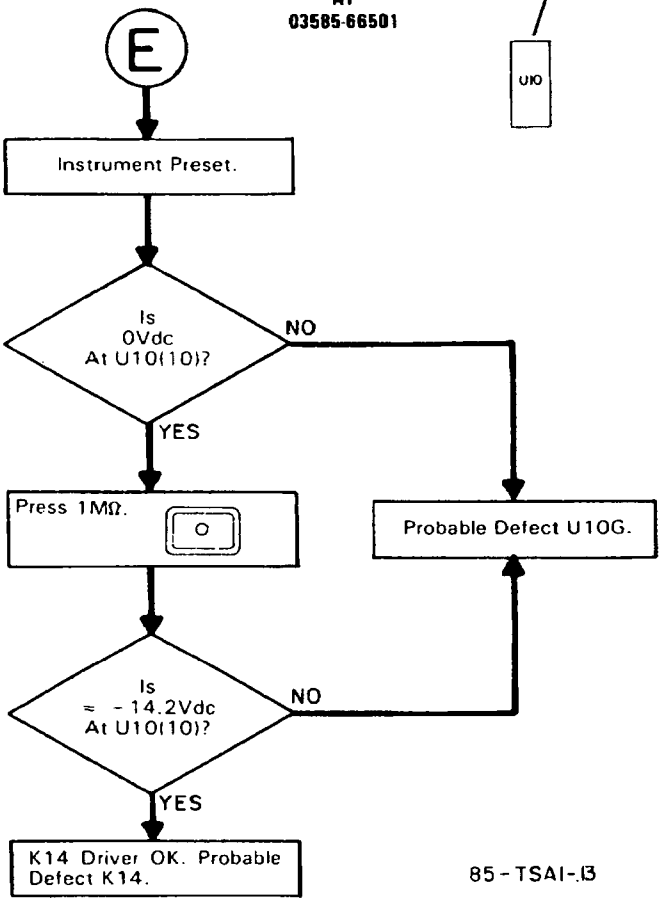


K14 Drive Circuitry Troubleshooting Tree

# SERVICE GROUP A-2
# CONVERSION SECTION

## Board No's. A2,3,4,5

## Part No. 03585-66502 Thru 03585-66505

### INDEX:



### ADJUSTMENTS:

| Component | Adjusted Parameter | Paragraph Location |
|---|---|---|
| A2L7,8,11,12 | 100.35MHz Passband Filter | 5-33 |
| A3L2 | 79.65MHz Image Filter | 5-33 |
| A3C8 | 79.65MHz Image Filter | 5-33 |
| A3L1,3,5,7 | 100.35MHz Passband Filter | 5-33 |
| A4L7 | 10.35MHz Passband Filter | 5-33 |
| A5L2,4,6 | 10.35MHz Passband Filter | 5-33 |
| A5L1,3,5 | 9.65MHz Image Filter | 5-33 |

### TROUBLESHOOTING NOTES:

1. All levels shown in the troubleshooting tree or on the schematic were measured with the Model 10020A probe with the 20:1, 1 kΩ tip installed. The usage of this probe is essential if repeatable readings are to be obtained.

2. Signal levels shown are typical values ±3dB. Conversion Section problems usually occur when signal levels are too low.

3. Signals entering opposing pins on the diode quad mixers should have equal amplitudes ±2dB. Imbalances indicate a possible input or output transformer problem if the transformer input signals are equal.

**INPUT/CONVERSION SECTION REMOVAL.**

a. Set the 3585 LINE Switch to off.
b. Place the instrument on its left side.
c. Remove the bottom cover.
d. Remove the cables, to the Input/Conversion box.

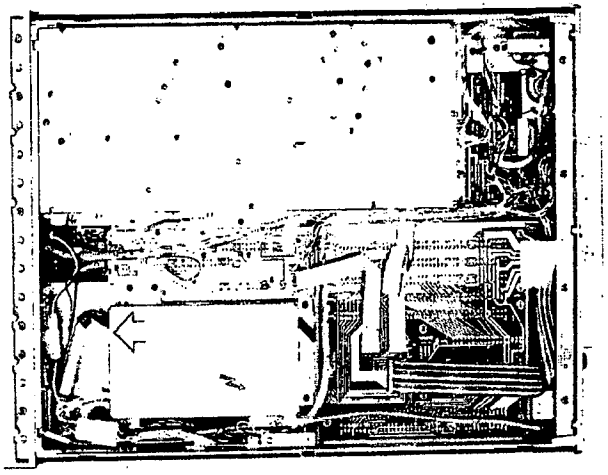

f. Remove the seven mounting screws.

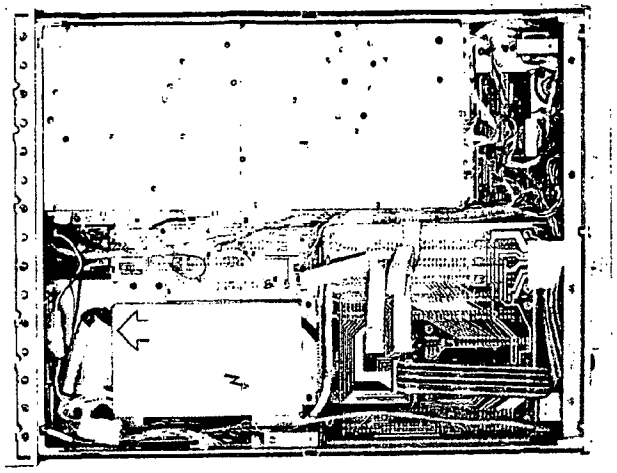

e. Place a stack of books, approximately eight inches high, next to the instrument. These books will be used to support the Input/Conversion Section.

**WARNING**

*Use caution when working near the High Voltage portion of the instrument.*

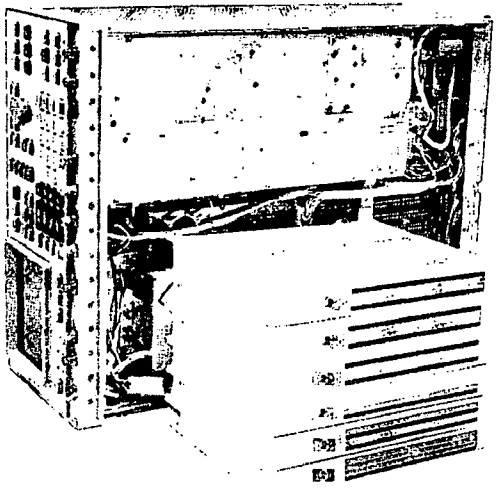

g. The Input/Conversion Section of the instrument is now free. If necessary the covers may be removed. To work on the Conversion Section, place the Input/Conversion box as shown in the photo on the left. To work on the Input Section, place the Input/Conversion box as shown in the photo on the right. Reconnect all cables for proper operation after positioning the Input/Conversion box.

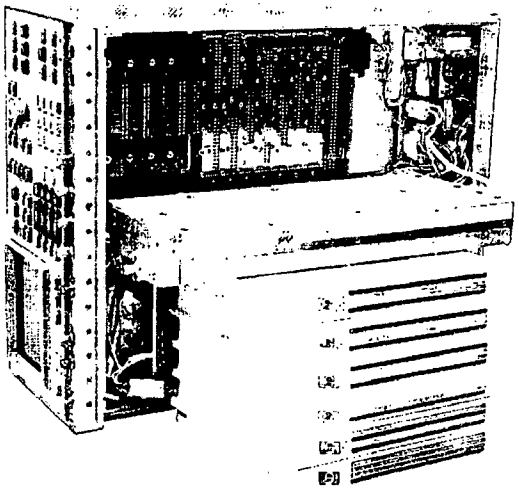

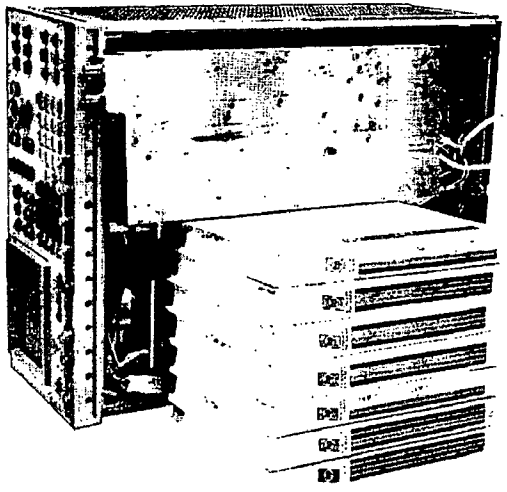

Figure 11-A-2-1. Input/Conversion Section Removal

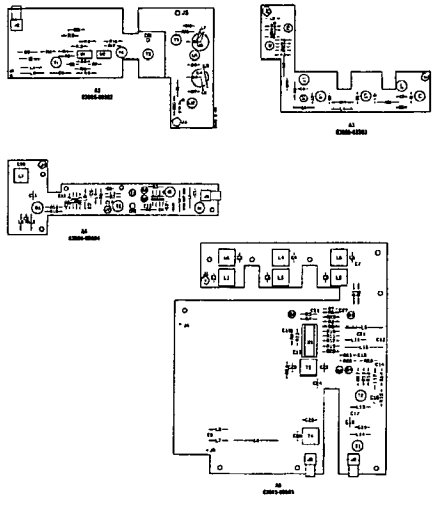

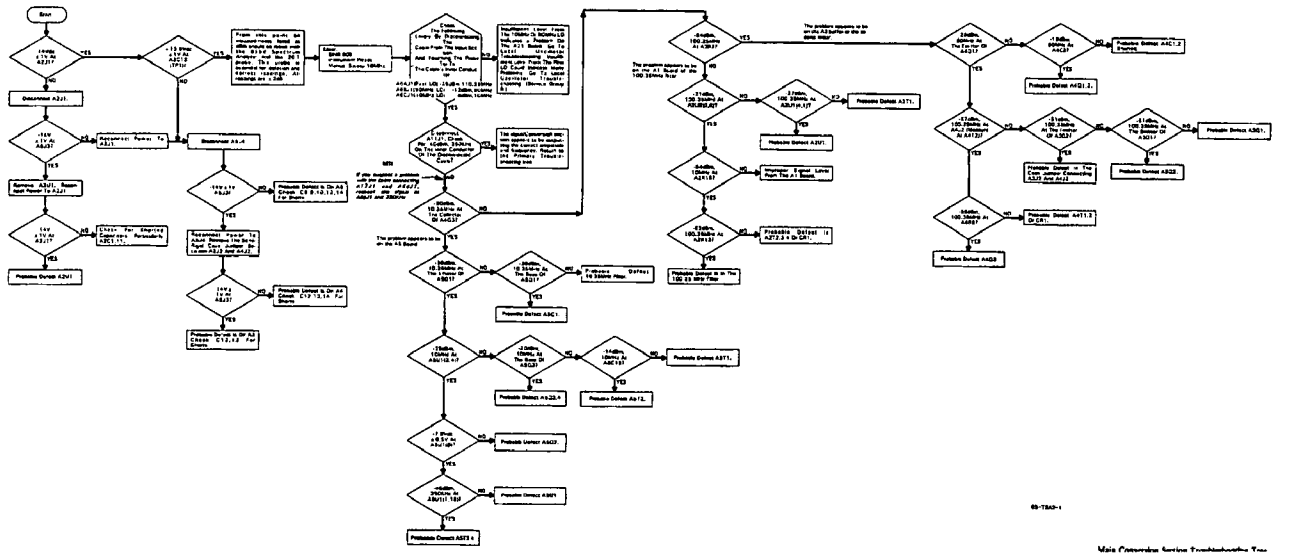
Start
YES
NO
Determine A2J1
Approximate Power To A2J1
Shutdown A3-4
Probable Defect A2U1
Probable Defect A3-23.4
Probable Defect A3-12.
Probable Defect A3T1.
Probable Defect A3C1.
Probable Defect A3C3.
Probable Defect A3R1.
Probable Defect A3T1.
Probable Defect A2U1.
Probable Defect A3T1.
Probable Defect A3C1.2
Probable Defect A3Q1.2.
Probable Defect A3C1.3
Probable Defect A3Q3.
Probable Defect A3Q1.
Probable Defect A3Q2.
The problem appears to be on the A3 Board

# SERVICE GROUP A-3
# FINAL IF SECTION

## Board No's A17, 18 AND 19
## Part Number 03585-66517 Thru 03585-66519

**INDEX:**



**ADJUSTMENTS:**

| Component | Adjusted Parameter | Paragraph Location |
|---|---|---|
| A17R105 | IF Input Level | 5-39 |
| A17L4 | LC First Stage Center Frequency | 5-30 |
| A17R12 | LC First Stage Insertion Loss | 5-30 |
| A17L5 | LC Second Stage Center Frequency | 5-29 |
| A17R20 | LC Second Stage Insertion Loss | 5-29 |
| A17L6 | XTAL First Stage Center Frequency | 5-28 |
| A17C29 | XTAL First Stage Symmetry | 5-28 |
| A17L8 | XTAL First And Second Stage Amplitude | 5-28 |
| A17L7 | XTAL Second Stage Center Frequency | 5-27 |
| A17C39 | XTAL Second Stage Symmetry | 5-27 |
| A17C27 | XTAL 1, 3Hz Center Frequency | 5-31 |
| A17C37 | XTAL 2, 3Hz Center Frequency | 5-31 |
| A17R26 | 300Hz Res. BW Gain | 5-31 |
| A17R28 | 100Hz Res. BW Gain | 5-31 |
| A17R30 | 30Hz Res. BW Gain | 5-31 |
| A17R32 | 10Hz Res. BW Gain | 5-31 |
| A17R34 | 3Hz Res. BW Gain | 5-31 |
| A18L5 | LC Third Stage Center Frequency | 5-26 |
| A18R15 | LC Third Stage Insertion Loss | 5-26 |
| A18L4 | XTAL Third Stage Center Frequency | 5-25 |
| A18C24 | XTAL Third Stage Symmetry | 5-25 |
| A18L6 | XTAL Third Stage Amplitude | 5-25 |

| Component | Adjusted Parameter | Paragraph Location |
|---|---|---|
| A18C22 | XTAL 3, 3Hz Center Frequency | 5-31 |
| A18R77 | First 16dB Gain Amplitude | 5-31 |
| A18R71 | Second 16dB Gain Amplitude | 5-31 |
| A18R65 | Third 16dB Gain Amplitude | 5-31 |
| A19L4 | LC Fourth Stage Center Frequency | 5-23 |
| A19R20 | LC Fourth Stage Insertion Loss | 5-23 |
| A19L5 | LC Fifth Stage Center Frequency | 5-24 |
| A19R28 | LC Fifth Stage Insertion Loss | 5-24 |
| A19L6 | XTAL Fourth Stage Center Frequency | 5-22 |
| A19C30 | XTAL Fourth Stage Symmetry | 5-22 |
| A19L7 | XTAL Fifth Stage Center Frequency | 5-21 |
| A19C41 | XTAL Fifth Stage Symmetry | 5-21 |
| A19C28 | XTAL 4, 3Hz Center Frequency | 5-31 |
| A19C39 | XTAL 5, 3Hz Center Frequency | 5-31 |

## TROUBLESHOOTING NOTES:

1. When you encounter the instruction

Enter: Res. BW ↑ ↓

press the following keys: 


This sequence of keys forces the instrument into the proper test mode.

2. Two things should be watched for during the tests:

Correct signal amplitude
Correct filter skirt width

3. Figures of the CRT are used extensively in this section to illustrate various steps in the procedure. The figures below should help you determine if a failure has occured. Figure 11-A-3-10 shows the normal difference between two bandwidths. Figure 11-A-3-2,3,4 show what a true failure usually looks like.

4. If, after studying the figures, it is still unclear whether or not a true failure has occured, use the Bandwidth Tests (Paragraph 4-83) to check the Resolution Bandwidth in question. If the Bandwidth in question passes the 3dB bandwidth and Shape Factor specifications continue with the troubleshooting procedure.

5. If one or more stages of IF filtering fail, the Shape Factor will increase according to the table below. To use the table, measure the Shape Factor of the instrument. If the result is equal (± 10%) to one of the numbers in the table it is an indication that one of the IF filter stages has failed.

**NOTE**

*This test is only a first order indication. The problem must be isolated to an individual board before a failure can be confirmed.*

| | # Of Stages Operating | | | | |
|---|---|---|---|---|---|
| | 5 | 4 | 3 | 2 | 1 |
| Shape Factor | 10 | 11.3 | 13.2 | 16.7 | 25.9 |

Shape Factor = 60dB Bandwidth/3dB Bandwidth

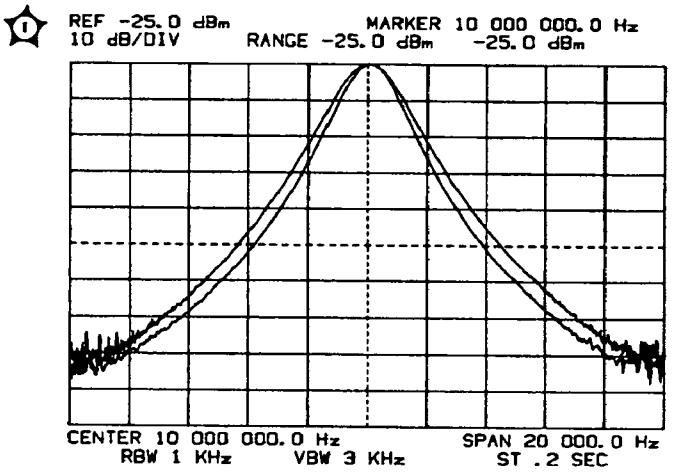


**Figure 11-A-3-1. Normal Display With Two Different Res. Bandwidths**

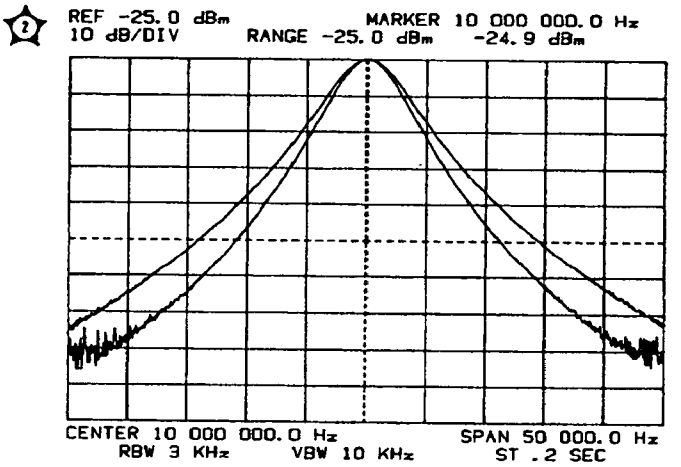


**Figure 11-A-3-2. Shape Factor Too Large**

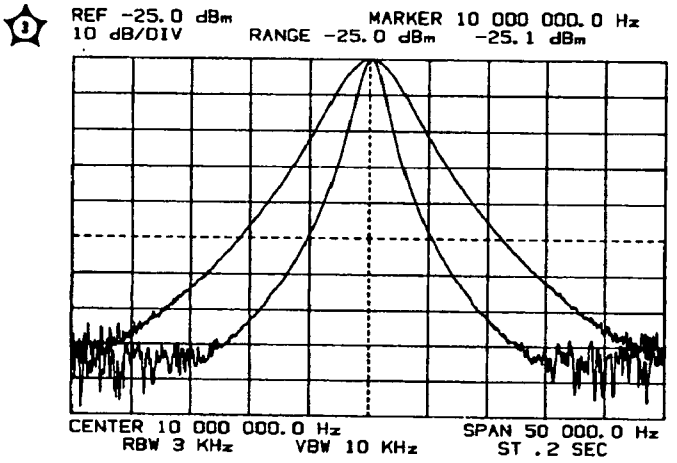


**Figure 11-A-3-3. Shape Factor Too Small**

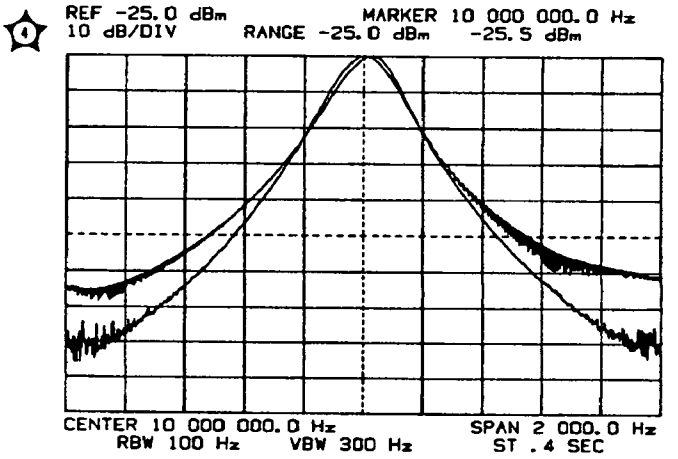


**Figure 11-A-3-4. Shorted Crystal Stage**

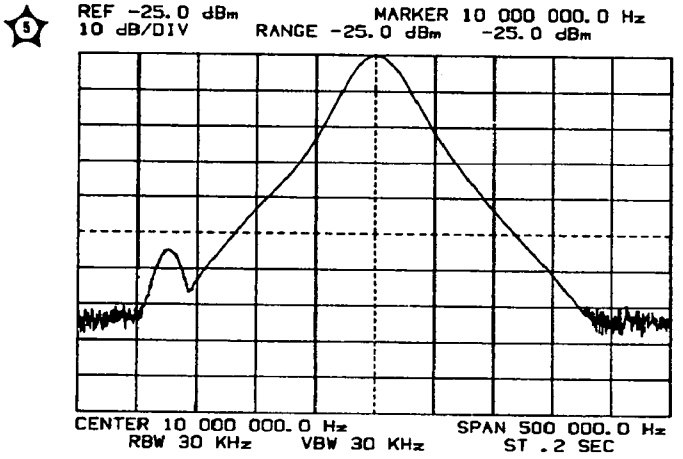


**Figure 11-A-3-5. 30KHz Res. Bandwidth**

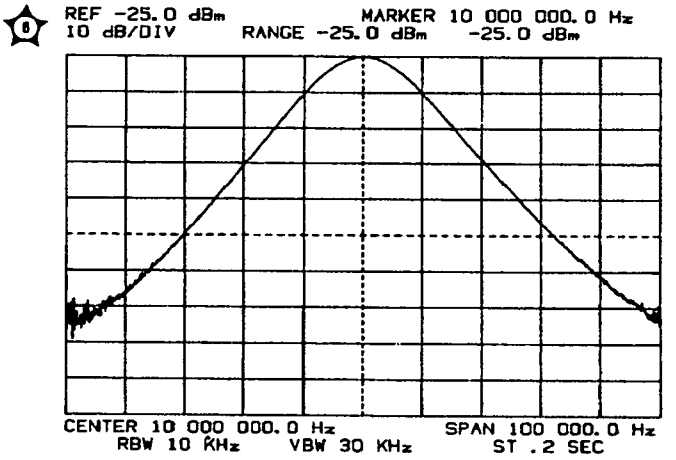


**Figure 11-A-3-6. 10KHz Res. Bandwidth**

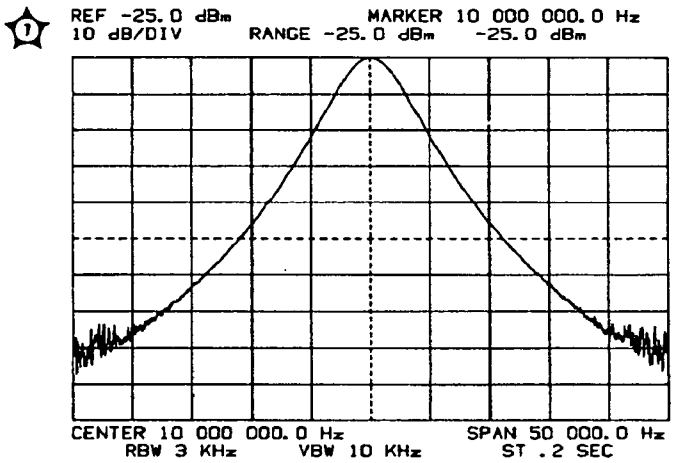


**Figure 11-A-3-8. 1-3-10KHz Bandwidths, Two Filter Stages**

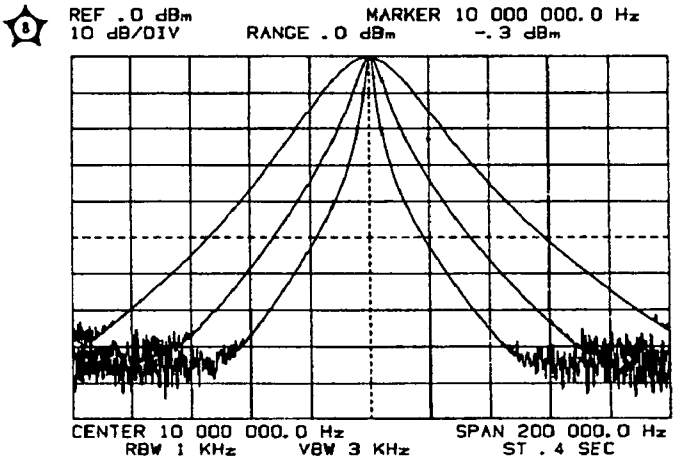


**Figure 11-A-3-7. 3KHz Res. Bandwidth Reference Trace**

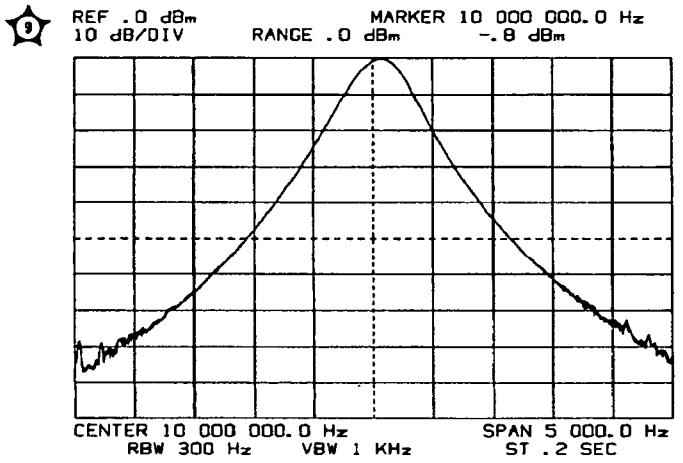


**Figure 11-A-3-9. 300Hz Res. Bandwidth**

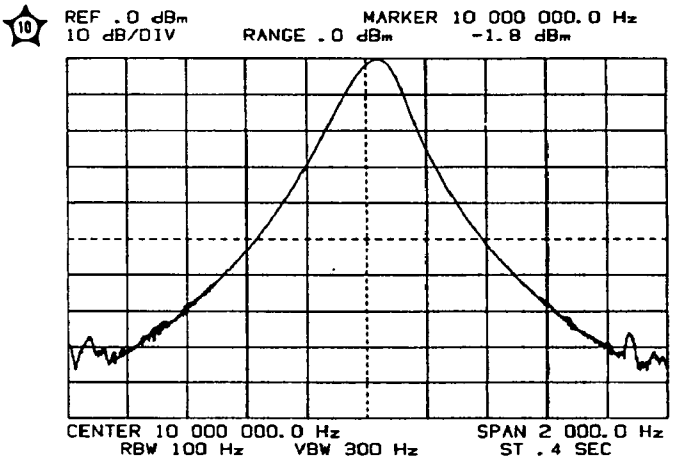


**Figure 11-A-3-10. 100Hz Res. Bandwidth**

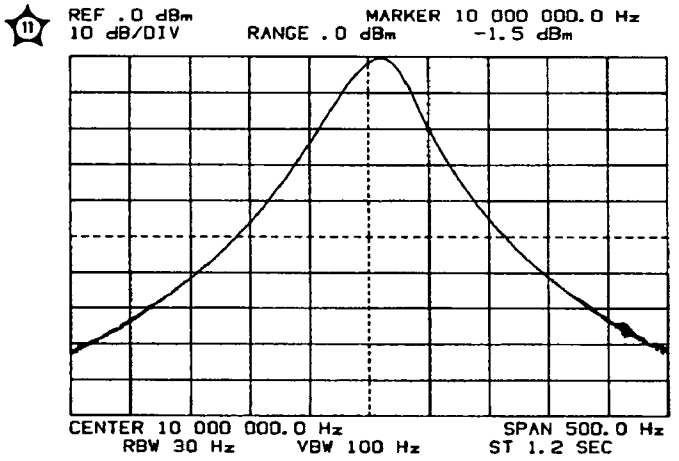


**Figure 11-A-3-11. 30Hz Res. Bandwidth**

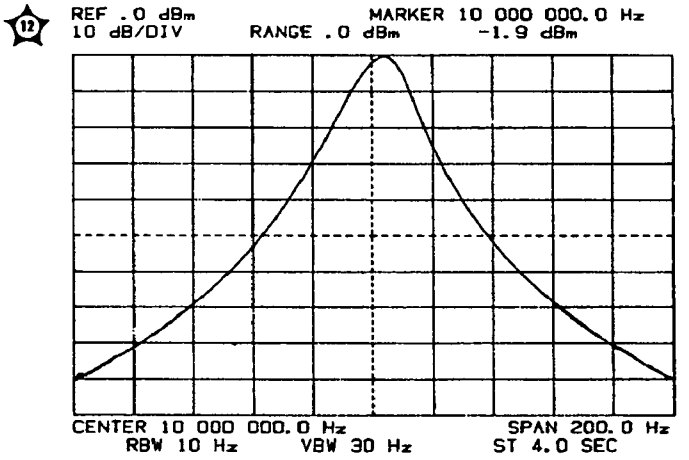


**Figure 11-A-3-12. 10Hz Res. Bandwidth**

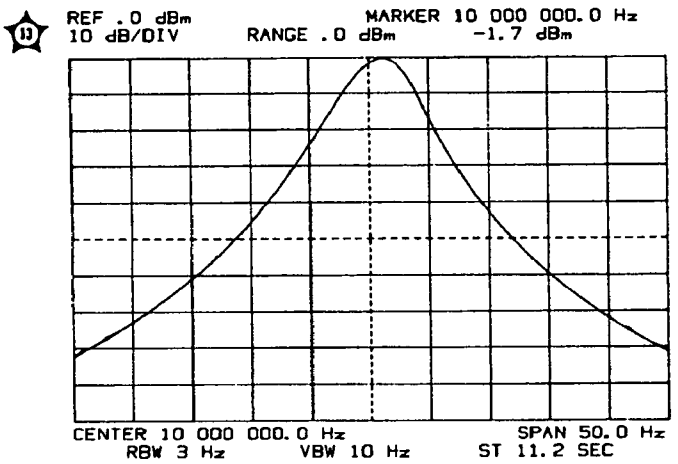


**Figure 11-A-3-13. 3Hz Res. Bandwidth**

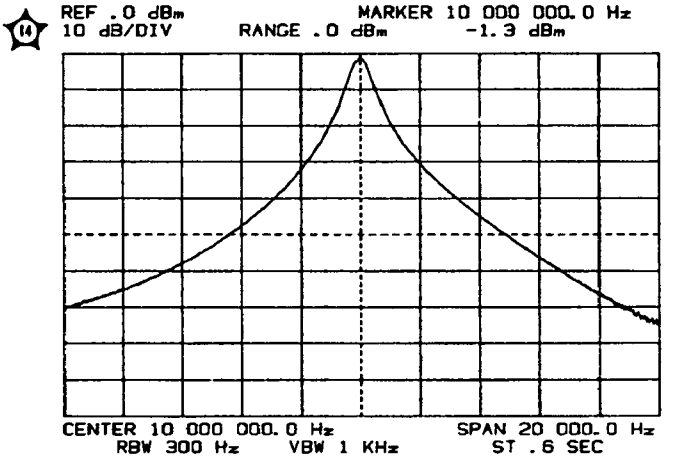


**Figure 11-A-3-14. 300Hz Res. Bandwidth, Two Filter Stages**

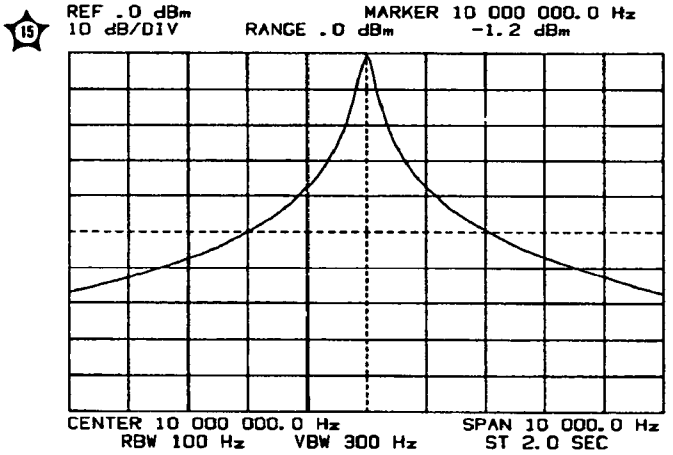


**Figure 11-A-3-15. 100Hz Res. Bandwidth, Two Filter Stages**

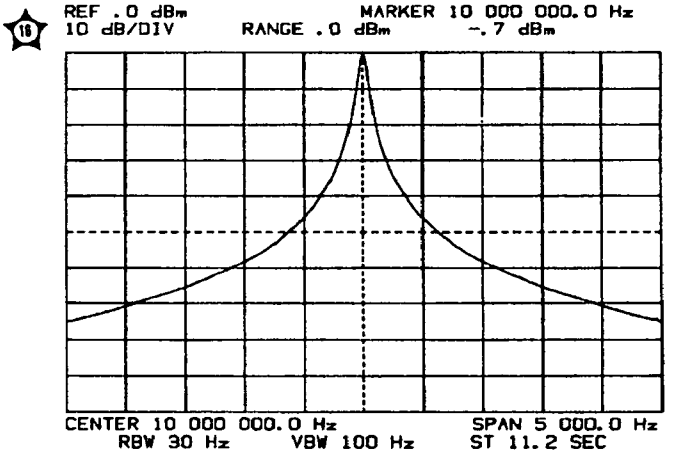


**Figure 11-A-3-16. 30Hz Res. Bandwidth, Two Filter Stages**

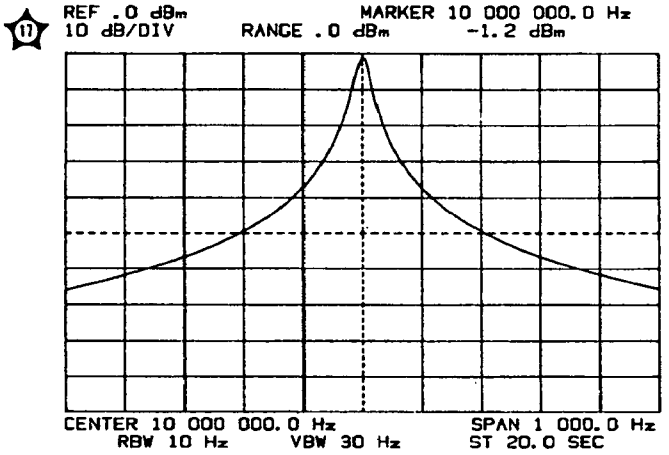


**Figure 11-A-3-17. 10Hz Res. Bandwidth, Two Filter Stages**

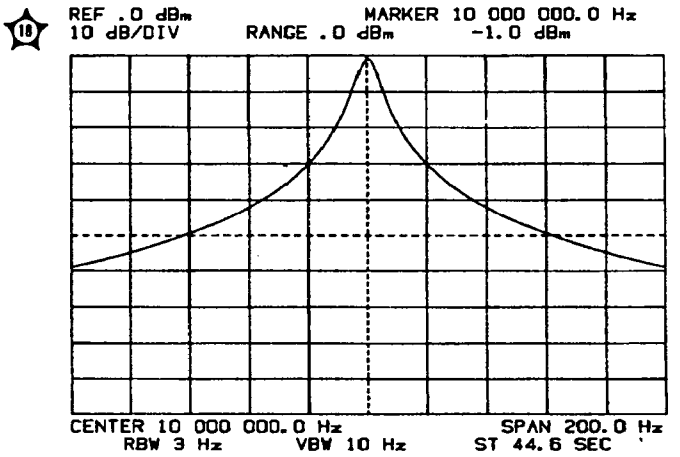


**Figure 11-A-3-18. 3Hz Res. Bandwidth, Two Filter Stages**

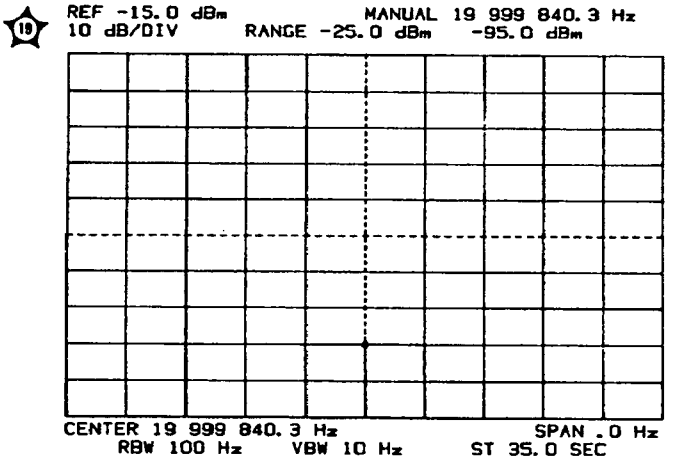


**Figure 11-A-3-19. IF Attenuator Test Set-up Display**

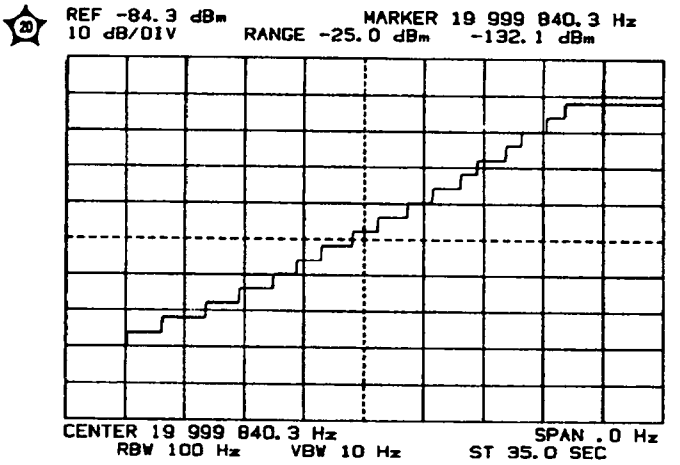


**Figure 11-A-3-20. Typical IF Attenuator Stairstep Response**

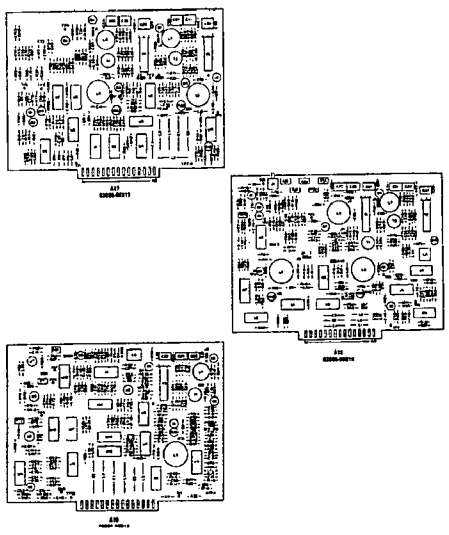

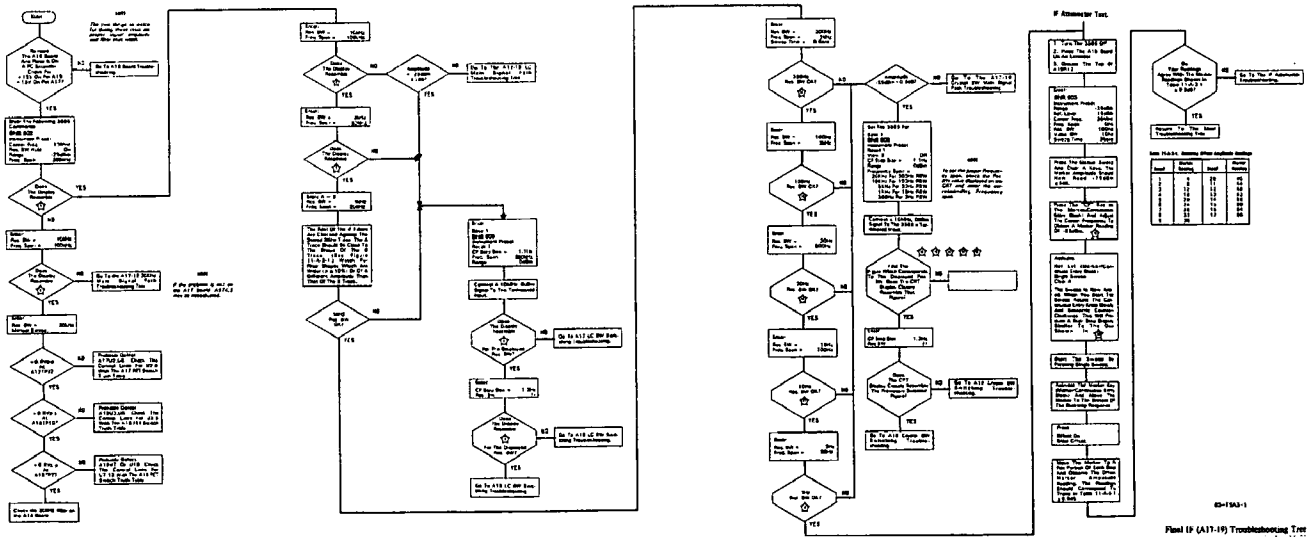

Fig. 19 (A17-19) Troubleshooting Tree

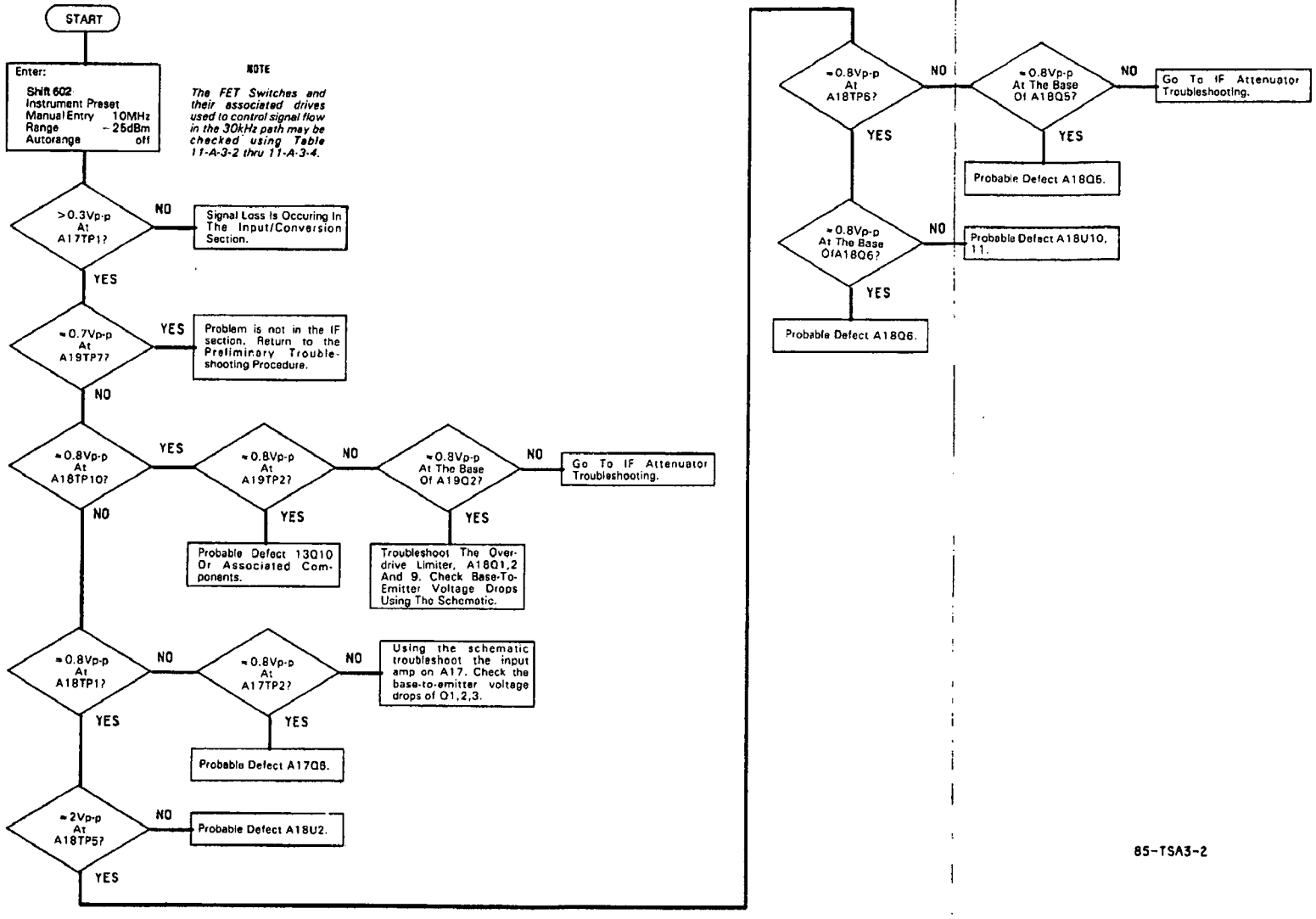


A17-19 30kHz BW Main Signal Path Troubleshooting Tree

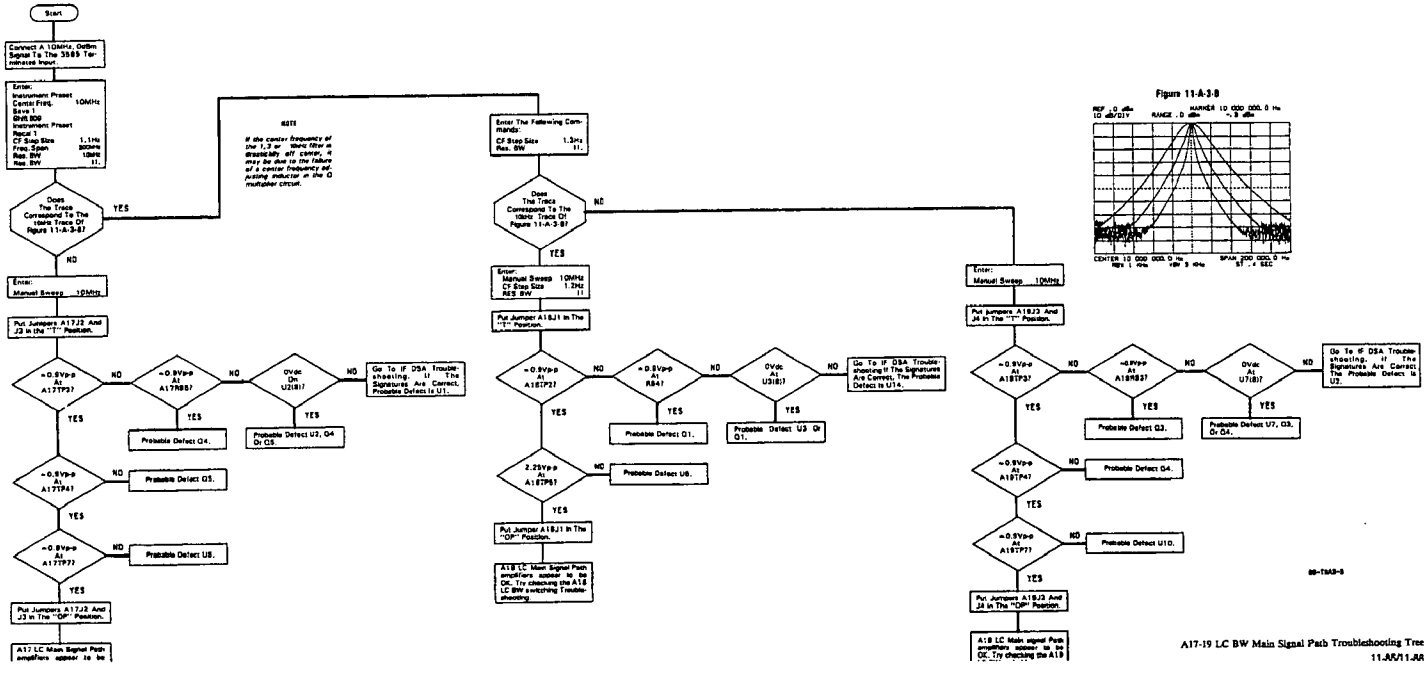


A17-19 LC BW Main Signal Path Troubleshooting Tree

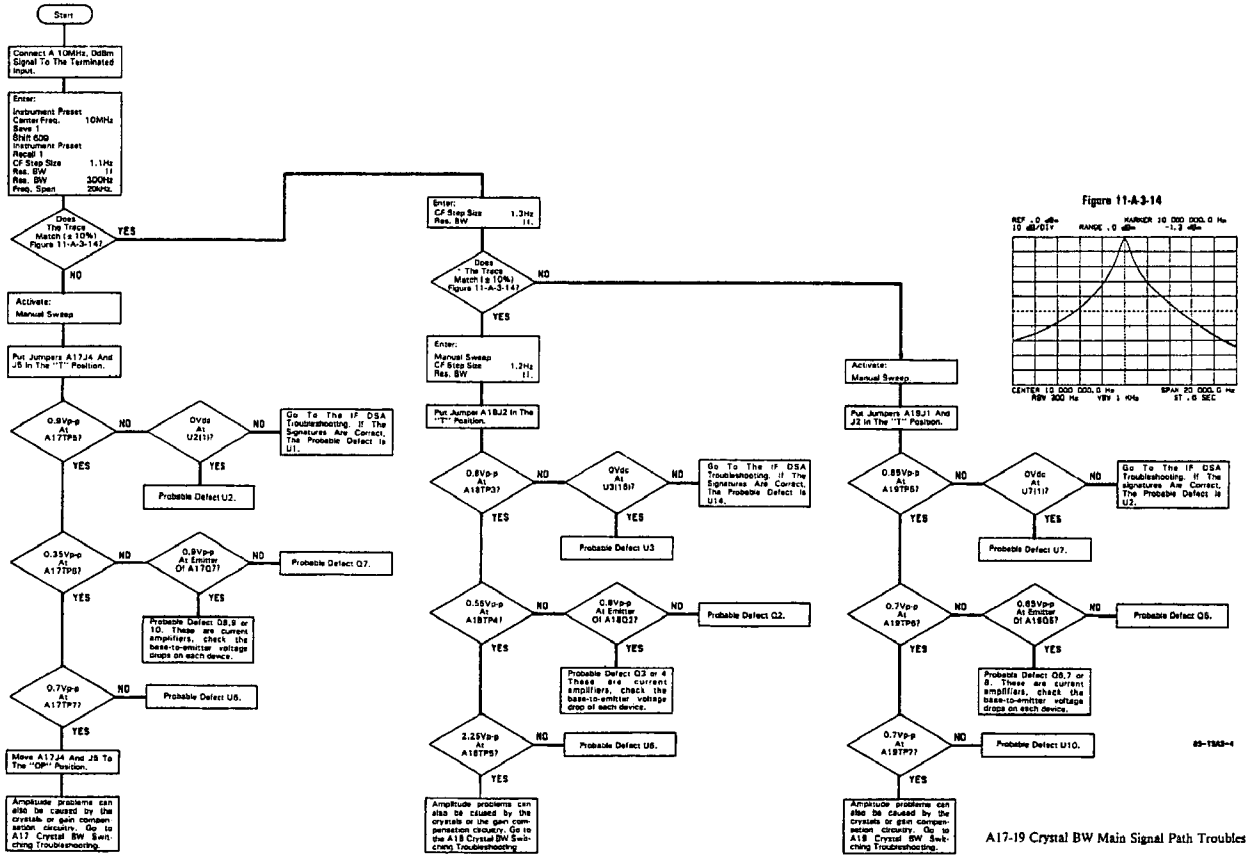


A17-19 Crystal BW Main Signal Path Troubleshooting Tree
11-87/11-88

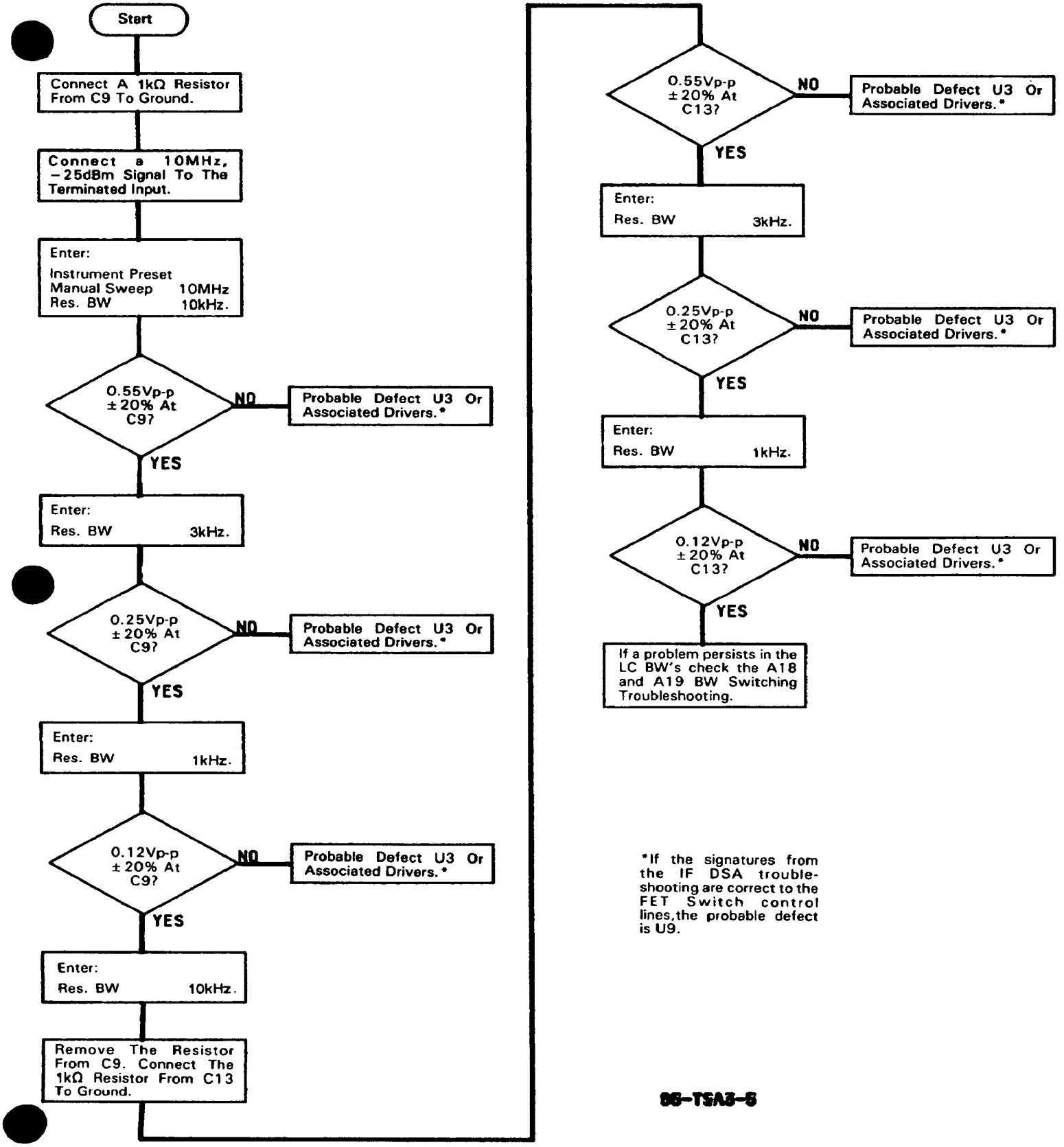


*If the signatures from the IF DSA troubleshooting are correct to the FET Switch control lines, the probable defect is U9.

SS-TSA3-5

A17 LC BW Switching Troubleshooting Tree

03585-26517 9-5-84 REV B

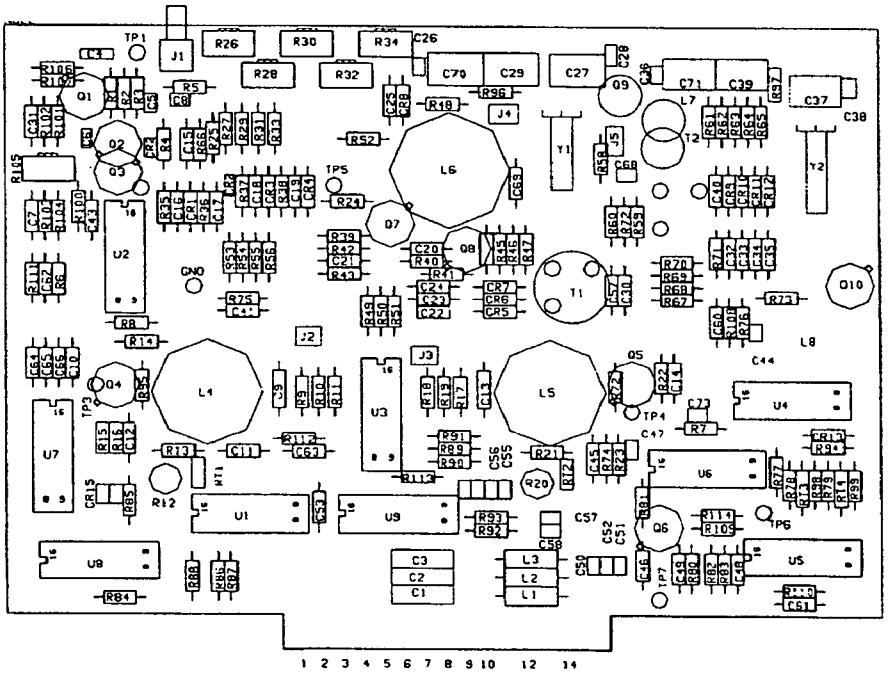

**A17**
**03585-66517**

03585-26518 18-OCT-84 REV B

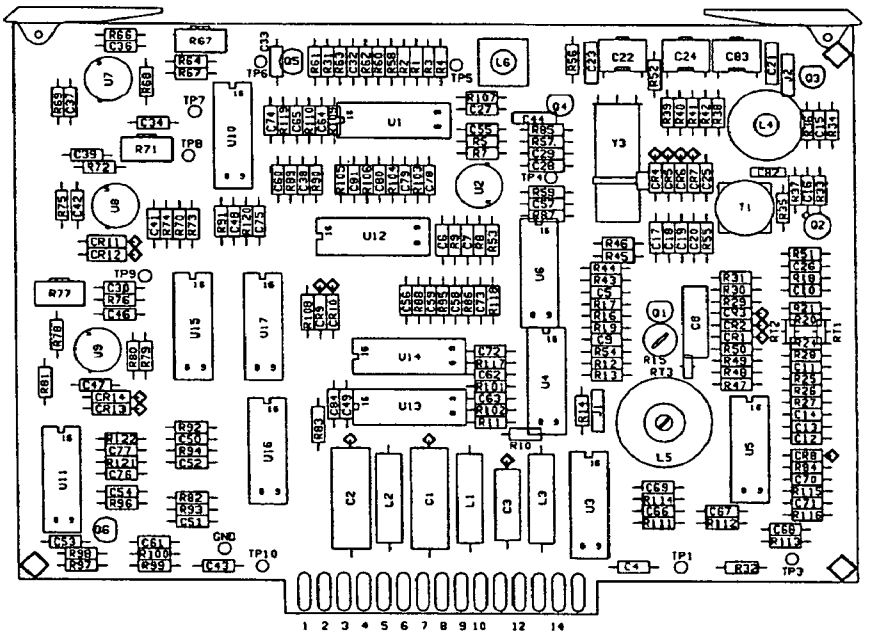

**A18**
**03585-66518**

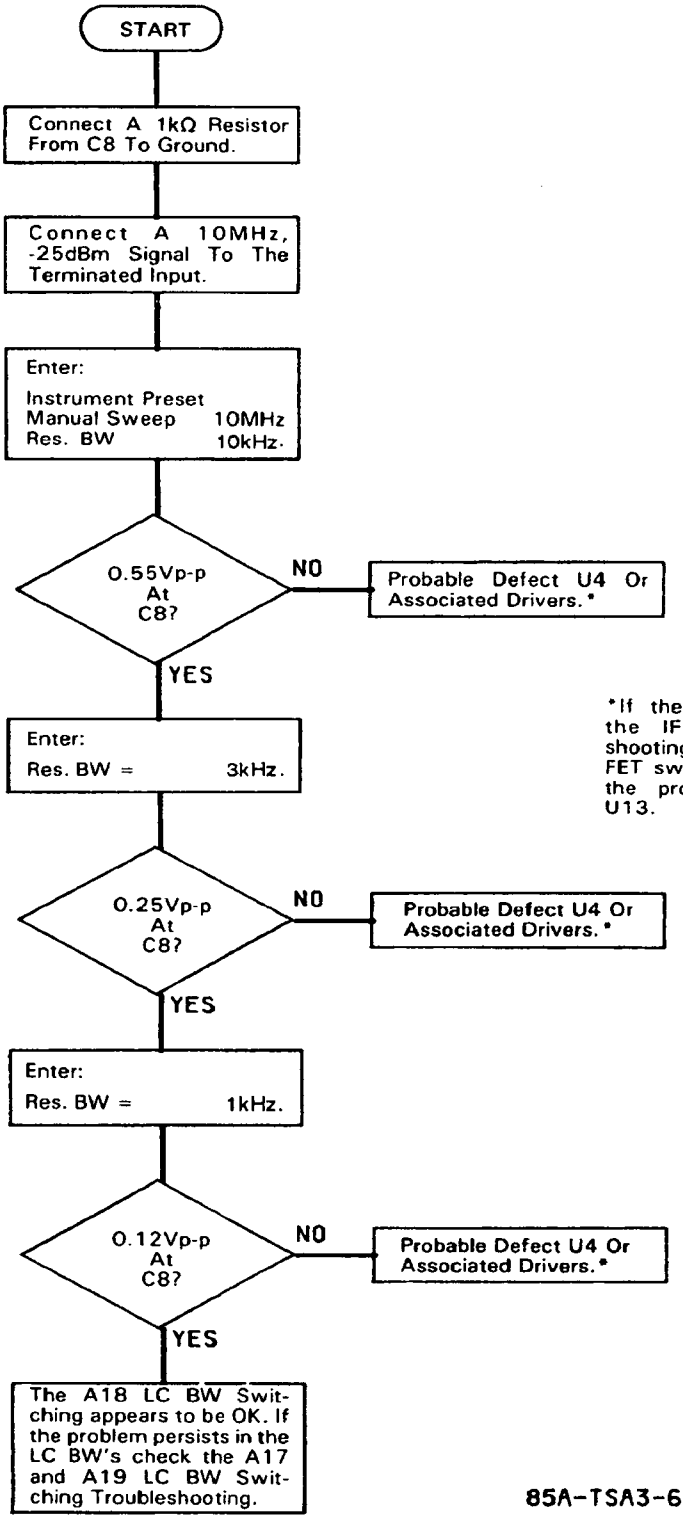


*If the signatures from the IF DSA Troubleshooting are correct to the FET switch control lines, the probable defect is U13.

A18 LC BW Switching Troubleshooting Tree

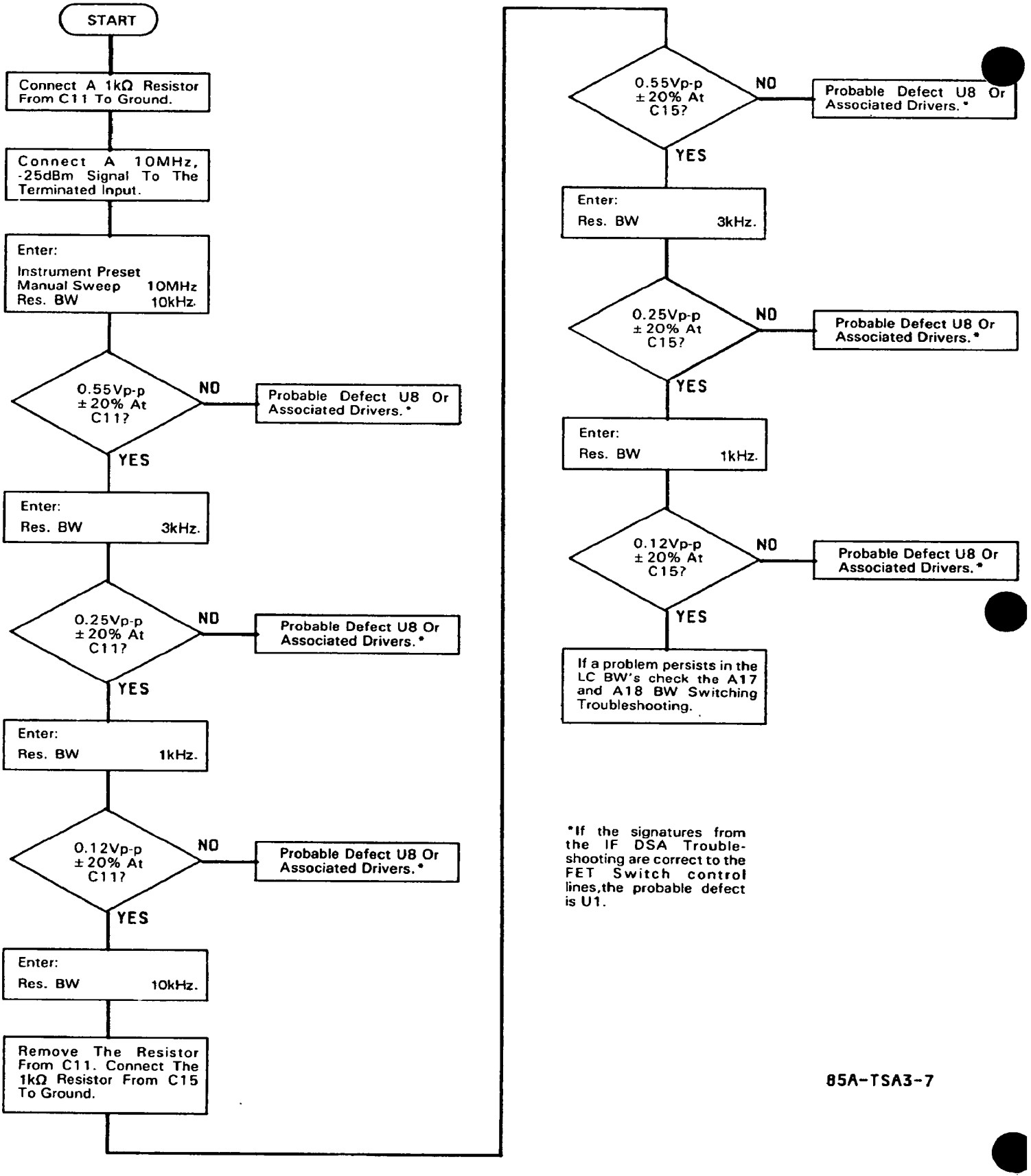


A19 LC BW Switching Troubleshooting Tree

Figure 11-A-3-14

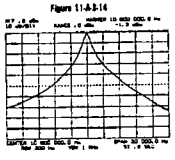

Figure 11-A-3-15

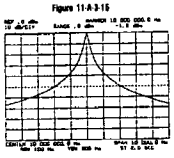

Figure 11-A-3-16

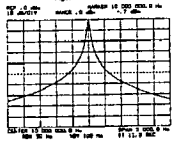

Figure 11-A-3-17

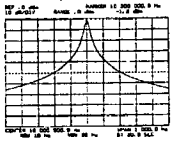

Figure 11-A-3-18

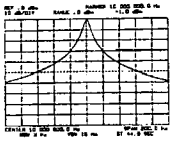

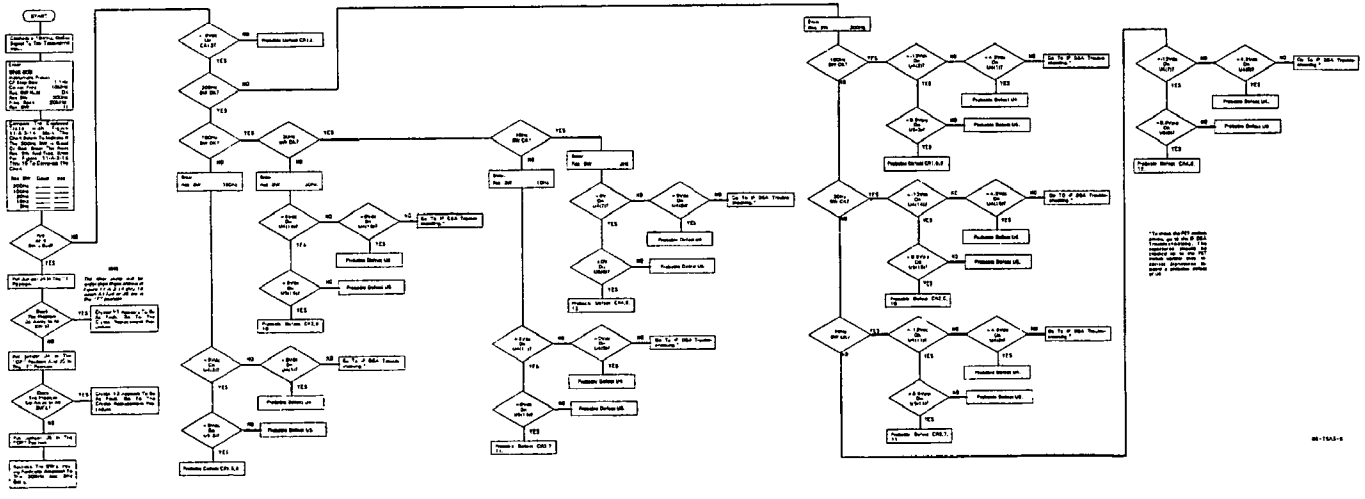

A17 Crystal BW Switching Troubleshooting Tree

Figure 11-A-3-21

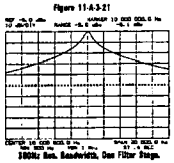

300Hz Res. Bandwidth, One Filter Stage.

Figure 11-A-3-22

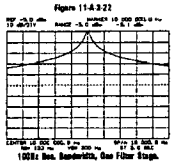

100Hz Res. Bandwidth, One Filter Stage.

Figure 11-A-3-23

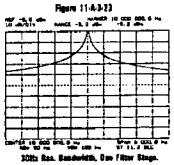

30Hz Res. Bandwidth, One Filter Stage.

Figure 11-A-3-24

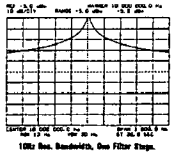

10Hz Res. Bandwidth, One Filter Stage.

Figure 11-A-3-25

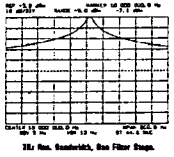

3Hz Res. Bandwidth, One Filter Stage.

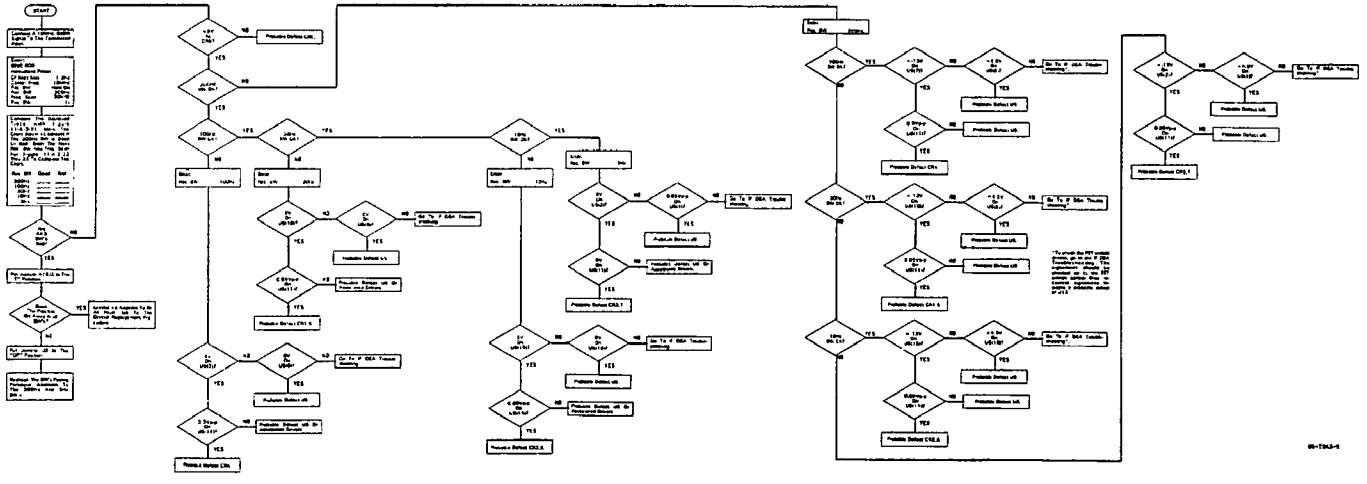

Figure 11-A-3-14

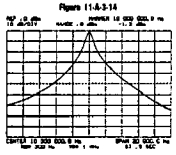

Figure 11-A-3-15

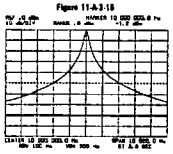

Figure 11-A-3-16

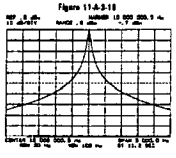

Figure 11-A-3-17

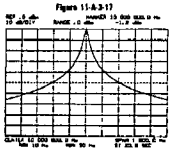

Figure 11-A-3-18

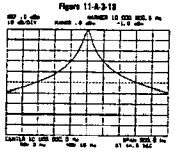

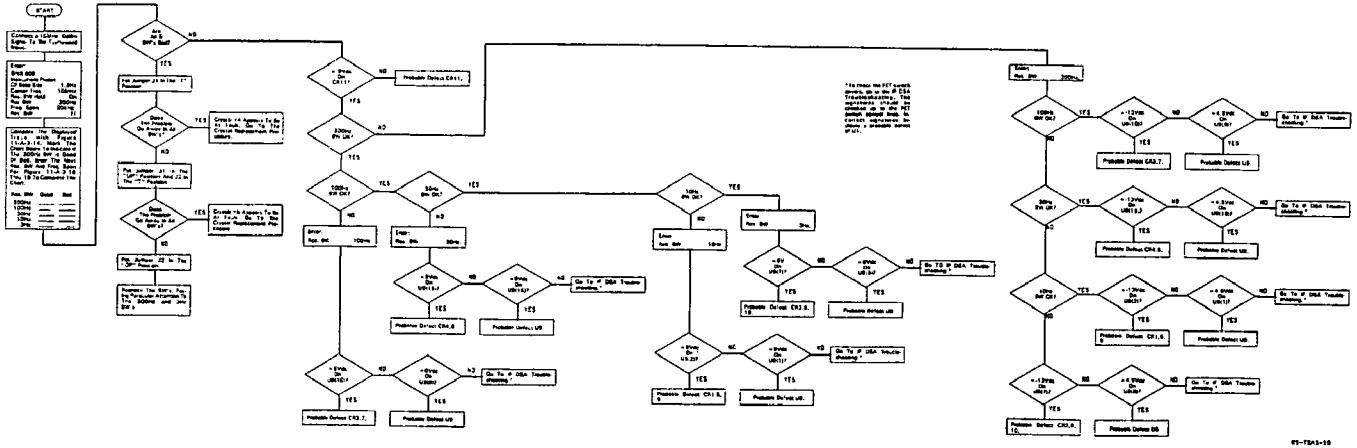


FS-TSA13-19

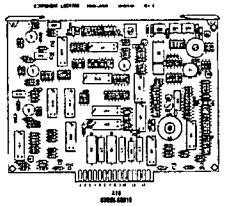

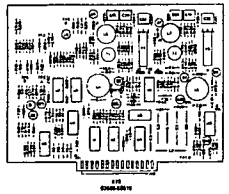

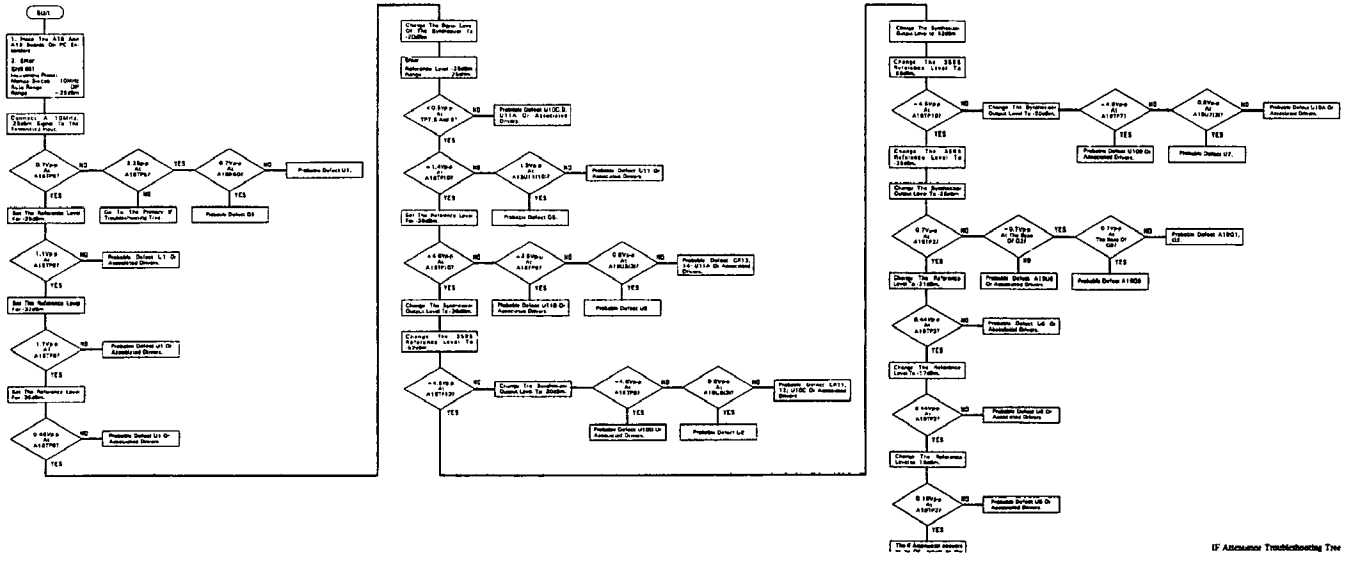


IF Assurance Troubleshooting Tree

**Table 11-A-3-1. A17 FET Switch Truth Table**

| Res. Bandwidth | Filter Path Selection U2 (1) | U2 (8) | U2 (9) | U6 (1) | U6 (9) | U6 (16) | Bandwidth Selection U3 (1) | U3 (8) | U3 (9) | U3 (16) | U4 (1) | U4 (8) | U4 (9) | U4 (16) | U5 (1) | U5 (8) | U5 (9) | U5 (16) |
|---|---|---|---|---|---|---|---|---|---|---|---|---|---|---|---|---|---|---|
| 30kHz | H | H | L | H | H | L | H | H | H | H | H | H | H | H | H | H | H | H |
| 10kHz | H | L | H | L | H | H | L | H | H | L | H | H | H | H | H | H | H | H |
| 3kHz | H | L | H | L | H | H | H | L | L | H | H | H | H | H | H | H | H | H |
| 1kHz | H | L | H | L | H | H | H | H | H | H | H | H | H | H | H | H | H | H |
| 300Hz | L | H | H | H | L | H | H | H | H | H | H | H | H | H | H | H | H | H |
| 100Hz | L | H | H | H | L | H | H | H | H | H | L | H | H | H | L | H | H | H |
| 30Hz | L | H | H | H | L | H | H | H | H | H | H | H | H | L | H | H | H | L |
| 10Hz | L | H | H | H | L | H | H | H | H | H | H | H | L | H | H | H | L | H |
| 3Hz | L | H | H | H | L | H | H | H | H | H | H | L | H | H | H | L | H | H |

H = 3.5V to 5V
L = 0V to 0.6V

**Table 11-A-3-2. A18 FET Switch Truth Table**

| Res. Bandwidth | Filter Path Selection U3 (1) | U3 (8) | U3 (16) | U6 (1) | U6 (8) | U6 (16) | Bandwidth Selection U4 (9) | U4 (16) | U5 (1) | U5 (8) | U5 (9) | U5 (16) | U6 (9) |
|---|---|---|---|---|---|---|---|---|---|---|---|---|---|
| 30kHz | L | H | H | H | L | H | H | H | H | H | H | H | H |
| 10kHz | H | L | H | L | H | H | L | H | H | H | H | H | H |
| 3kHz | H | L | H | L | H | H | H | L | H | H | H | H | H |
| 1kHz | H | L | H | L | H | H | H | H | H | H | H | H | H |
| 300Hz | H | H | L | H | H | L | H | H | H | H | H | H | H |
| 100Hz | H | H | L | H | H | L | H | H | H | L | H | H | H |
| 30Hz | H | H | L | H | H | L | H | H | H | H | L | H | L |
| 10Hz | H | H | L | H | H | L | H | H | H | H | H | L | L |
| 3Hz | H | H | L | H | H | L | H | H | L | H | H | H | L |

| Reference Level | 4dB/Step Attenuator U1 (1) | U1 (8) | U1 (9) | U1 (16) | 16dB Gain Steps U10 (1) | U10 (8) | U10 (9) | U10 (16) | U11 (1) | U11 (8) | U11 (9) | U11 (16) |
|---|---|---|---|---|---|---|---|---|---|---|---|---|
| -25dBm | H | L | H | H | H | H | H | H | H | H | L | L |
| -28dBm | H | H | H | L | H | H | H | H | H | H | L | L |
| -32dBm | H | H | L | H | H | H | H | H | H | H | L | L |
| -36dBm | L | H | H | H | H | H | H | H | L | L | H | H |
| -52dBm | L | H | H | H | H | L | L | H | H | L | H | H |
| -68dBm | L | H | H | H | L | L | H | L | H | L | H | H |

H = 3.5V to 5V
L = 0V to 0.6V

**Table 11-A-3-3. A19 FET Switch Truth Table**

| Res. Bandwidth | Filter Path Selection U7 (1) | U7 (8) | U7 (16) | U10 (1) | U10 (8) | U10 (16) | Bandwidth Selection U8 (1) | U8 (8) | U8 (9) | U8 (16) | U9 (1) | U9 (8) | U9 (9) | U9 (16) |
|---|---|---|---|---|---|---|---|---|---|---|---|---|---|---|
| 30kHz | H | H | L | L | H | H | H | H | H | H | H | H | H | H |
| 10kHz | H | L | H | H | L | H | H | L | L | H | H | H | H | H |
| 3kHz | H | L | H | H | L | H | L | H | H | L | H | H | H | H |
| 1kHz | H | L | H | H | L | H | H | H | H | H | H | H | H | H |
| 300Hz | L | H | H | H | H | L | H | H | H | H | H | H | H | H |
| 100Hz | L | H | H | H | H | L | H | H | H | H | L | H | H | H |
| 30Hz | L | H | H | H | H | L | H | H | H | H | H | L | H | H |
| 10Hz | L | H | H | H | H | L | H | H | H | H | H | H | L | H |
| 3Hz | L | H | H | H | H | L | H | H | H | H | H | H | H | L |

**Overdrive Attenuator FET Switch Truth Table (Instrument Test Mode 01).**

| Reference Level | U6 (1) | U6 (8) | U6 (9) | U6 (16) |
|---|---|---|---|---|
| -15dBm | H | H | H | L |
| -17dBm | H | H | L | H |
| -21dBm | L | H | H | H |
| -25dBm | H | L | H | H |

H = 3.5V to 5
L = 0V to 0.6V

**Test Procedure For IF Filters.**

1. Input a full scale signal to the Terminated input. For example, use a −25dBm signal with the Range and Reference Level equaling −25dBm.

**NOTE**

*When checking the IF section, it is best to use a synthesized signal source. This becomes essential when checking the Crystal Bandwidths.*

2. Using MANUAL ENTRY, enter the frequency of your signal source on the 3585.

3. Select the desired RES. BW.

4. Signal tracing may now be done on any of the IF boards. Signal level should be slightly less than unity from the IF input to the IF output (≈1.5dB loss).

**Test Procedure For An Individual IF Stage.**

1. Input a full scale signal to the Terminated Input.

2. Place the A17, 18 or 19 board on a PC extender. Using Table 11-A-3-4, place the test jumper specified in the "test" position.

**Table 11-A-3-4. Jumper Test Positions**

| To Test IF Filter Stage | Jumper To Place In Test Position | |
|---|---|---|
| | LC BW's | Crystal BW's |
| 1 | A17J3 | A17J5 |
| 2 | A17J2 | A17J4 |
| 3 | Jumpers bypass the entire third stage | |
| 4 | A19J4 | A19J2 |
| 5 | A19J3 | A19J1 |

3. Enter:

Shift 609
Instrument Press
Center Frequency.....signal source frequency
CF Step Size.....1.1,1.2 or 1.3Hz (board # corresponds to the CF Step Size entry)
Res. BW..... ⇩ ⇧
Res. BW.....desired value
Res. BW Hold.....on
Frequency Span.....adjust to a value which will allow you to view either the 3dB or 60db points.

4. To change Res. BW, enter a new value for the Res. BW (remember to change the jumpers according to Table 11-A-3-4 if you change from LC to crystal BW's or vice versa). To check a different boards filters enter:

CF Step Size.....1.1,1.2 or 1.3Hz
Res. BW..... ⇩ ⇧
Res BW.....selected value

**A17-A19 Board Signature Analysis Tests.**

Equipment Required: Signature Analyzer.

a. Turn the instrument off.

b. On the A83 board (tabs = Orange/Gray), set the DIP switch (SW101) positions 1 and 6 "closed". All others should be "open".

c. Connect the Signature Analyzer as follows:

START and STOP---------- A82 TP4
CLOCK---------- A82 U9 (8)
GND---------- A82 TP1

d. Set the Signature Analyzer controls as follows:

START---------- ¬ (in)
STOP---------- ⌋ (out)
CLOCK---------- ⌋ (out)
HOLD---------- off(out)
SELF TEST---------- off(out)

e. Turn the 3585 (and Signature Analyzer) on.

f. At this point, the CRT screen should be blank, the front-panel LED indicators should be on and the four LEDs on A83 should be on.

To verify that your test setup is correct and the test routine is running properly, touch the Signature Analysis test probe to A17, 18 or 19, pin B13).

The signature should be "1USC".

g. Check for the following signatures at A17, 18 or 19, pins A3 thru A10:

| A17,18 or 19 Pin | Signature |
|---|---|
| A3 | 9900 |
| A4 | C059 |
| A5 | 4CAH |
| A6 | 37U3 |
| A7 | 9CAH |
| A8 | 2863 |
| A9 | PPCC |
| A10 | C74C |

1. If signatures are correct, go to Step h.

2. If signatures are incorrect, trouble is on I/O board (A83, Service Group C), or lines are being loaded by A15 board or A17-A19 IF boards.

**NOTE**

*The following procedures are for each individual IF board. Use the Signature Analysis Tests which pertain to the board you are troubleshooting.*

**A17 Board Signature Analysis Tests.**

h. Check the following signatures:

| IC# (pin) | Signature |
|---|---|
| U7( 7) | A3H1 |
| U7( 9) | 2406 |
| U7(12) | U97F |
| U1( 9) | F221 |

1. If signatures are correct, no further Signature Analysis Tests are required. Disconnect the Signature Analyzer, set the A83 test switches to the "OPEN" position and correct the defect indicated on the A17 Troubleshooting Tree.

2. If signatures are incorrect, go to Step i.

Further A17 Board Signature Analysis Tests.

- Bandwidth Selector U9.

| U9 Pin | Signature | Bandwidth |
|---|---|---|
| 2 | 6192 | 10kHz |
| 5 | 0CH8 | 3kHz |
| 7 | H118 | 30Hz |
| 10 | 649F | 3Hz |
| 12 | 0P04 | 100Hz |
| 15 | FP91 | 10Hz |

- Filter (30KHz, LC or Xtal) Selector U1.

| U1 Pin | Signature |
|---|---|
| 7 | 9P99 |
| 10 | 798P |
| 15 | P411 |

**A18 Board Signature Analysis Tests.**

h. Check the following signatures:

| IC#(Pin) | Signature |
|---|---|
| U17( 7) | A3H1 |
| U17( 9) | 2406 |
| U17(11) | 62A6 |
| U17(13) | C570 |
| U17(14) | 9AU5 |
| U14( 9) | 59UC |

1. If signatures are correct, no further Signature Analysis Tests are required. Disconnect the Signature Analyzer, set the A83 test switches to the "OPEN" position and correct the defect indicated on the A18 Troubleshooting Tree.

2. If signatures are incorrect, go to Step i.

Further A18 Board Signature Analysis Tests.

- Bandwidth Selector U13.

| U13 Pin | Signature | Bandwidth |
|---|---|---|
| 2 | 6192 | 10kHz |
| 5 | 0CH8 | 3kHz |
| 7 | H118 | 30Hz |
| 10 | 649F | 3Hz |
| 12 | 0P04 | 100Hz |
| 15 | FP91 | 10Hz |

- Fillter (30KHz, LC or Xtal) Selector U14.

| U14 Pin | Signature |
|---|---|
| 7 | 3PPF |
| 10 | A4HA |
| 12 | 04FC |
| 15 | 632A |

- 4dB Step Attenuator Control U12.

| U12 Pin | Signature | Attenuation |
|---|---|---|
| 15 | 01C7 | 0dB |
| 10 | HP7F | 4dB |
| 5 | 1905 | 8dB |
| 7 | 596F | 12dB |

- 16dB Gain Step Control U15.

| U15 Pin | Signature | Controlled Switch |
|---|---|---|
| 2 | HU18 | U11B |
| 5 | CA29 | U11A |
| 7 | CAU9 | U11C,D |
| 10 | 613P | U10B |
| 12 | UAP5 | U10C |
| 15 | 5C48 | U10A,D |

**A19 Board Signature Analysis Tests.**

h. Check the following signatures:

| IC#(Pin) | Signature |
|---|---|
| U4( 7) | A3H1 |
| U4( 9) | 851P |
| U4(10) | 62A6 |
| U4(15) | U97H |
| U2( 9) | HU6P |

1. If signatures are correct, no further Signature Analysis Tests are required. Disconnect the Signature Analyzer, set the A83 test switches to the "OPEN" position and correct the defect indicated on the A19 Troubleshooting Tree.

2. If signatures are incorrect, go to Step i.

Further A19 Board signature Analysis Tests.

- Bandwidth Selector U1.

| U1 Pin | Signature | Bandwidth |
|---|---|---|
| 2 | FP91 | 10Hz |
| 5 | 0P04 | 100Hz |
| 7 | 649F | 3Hz |
| 10 | 6UAH | 30Hz |
| 12 | 04P3 | 3kHz |
| 15 | 8399 | 10kHz |

- Filter (30kHz, LC or Xtal) Selector U2.

| U2 Pin | Signature |
|---|---|
| 2 | 3A72 |
| 7 | CFA4 |
| 10 | HU6P |

- Overdrive Attenuator Control U3.

| U3 Pin | Signature | Attenuation |
|---|---|---|
| 7 | 0U8U | 0dB |
| 10 | 6UAH | 4dB |
| 15 | 8399 | 8dB |
| 12 | 04P3 | 12dB |

i. Check for the following signatures at A17U7, A18U17 or A19U4, pins 1 thru 4:

| Pin | Signature |
|---|---|
| 1 | PF7U |
| 2 | A7P0 |
| 3 | C9FP |
| 4 | C114 |

1. If signatures are correct, Probable Defect is U2.

2. If signatures are incorrect, Probable Defect is U1 (or U1 outputs being loaded by U2).

## CRYSTAL REPLACEMENT PROCEDURE

a. The five crystals used in the IF section (A17-19 boards) are a matched set. If a defective crystal is discovered all five crystals must be replaced with a new matched set (-hp- Part Number 03585-82501).

b. When you receive your new set of crystals you will also receive a sheet similar to the one below:

| Comprise Set #184 | | |
|---|---|---|
| XTAL Number | Pad Value (Ω) | HP Part Number |
| 219A | 97.6 | 0698-4402 |
| 111B | 73.2 | 0698-4395 |
| 214A | 73.2 | 0698-4395 |
| 76A | 73.2 | 0698-4395 |
| 12A | 84.5 | 0698-4397 |

**Figure 11-A-3-4. Crystal Data Sheet Example**

c. Each set is given a number. Each crystal is also identified with a small, numbered sticker on the crystal body. This number corresponds with the "XTAL Number" column in Figure 11-A-3-4.

d. Select a crystal from the new set. Using the sheet which you received with your crystal set, find the listed value of resistance required for that crystal. Table 11-A-3-5 lists the HP part numbers for the padding resistors used for the crystals.

**Table 11-A-3-5. Crystal Padding Resistors**

| Resistor Value ±1% | HP Part Number |
|---|---|
| 0 | 8150-3375 |
| 12.1 | 0757-0379 |
| 24.3 | 0757-0386 |
| 36.5 | 0757-0390 |
| 48.7 | 0698-4381 |
| 60.4 | 0698-4387 |
| 73.2 | 0698-4393 |
| 84.5 | 0698-4397 |
| 97.6 | 0698-4402 |
| 110.0 | 0757-0402 |

e. When you have obtained the correct padding resistor for the new crystal, replace the old crystal and associated padding resistor. The crystals and their associated padding resistors are listed in Table 11-A-3-6.

**Table 11-A-3-6. Crystal and Padding Resistor Numbers**

| Crystal | Padding Resistor |
|---|---|
| Y1 | A17R96 |
| Y2 | A17R97 |
| Y3 | A18R52 |
| Y4 | A19R84 |
| Y5 | A19R86 |

f. Once the new set of crystals are installed they must be adjusted in the manner outlined in Paragraph 5-20 through 5-31.

# SERVICE GROUP A-4
# LOG AMPLIFIER
## Board No. A14
## (Part Number 03585-66514)

### INDEX:



### ADJUSTMENTS:

| Component | Adjusted Parameter | Paragraph Location |
|---|---|---|
| A14L5 | 30KHz Filter | 5-18 |
| A14L7 | 30KHz Filter | 5-18 |
| A14R57 | Log Amplifier Input Level | 5-18 |
| A14R17 | - 10dB Log Linearity | 5-18 |
| A14R43 | - 30dB Log Linearity | 5-18 |
| A14R8 | - 50dB Log Linearity | 5-18 |
| A14R14 | - 70dB Log Linearity | 5-18 |
| A14R21 | - 90dB Log Linearity | 5-18 |
| A14R26 | -100dB Log Linearity | 5-18 |

### TROUBLESHOOTING NOTES:

1. Do not adjust the Log Amplifier unless you have verified a misadjustment. All the adjustments for the A14-16 boards must be performed if the Log Amplifier is adjusted.

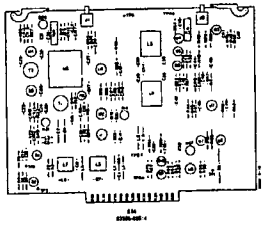

Log Amp Board (A14) Troubleshooting.

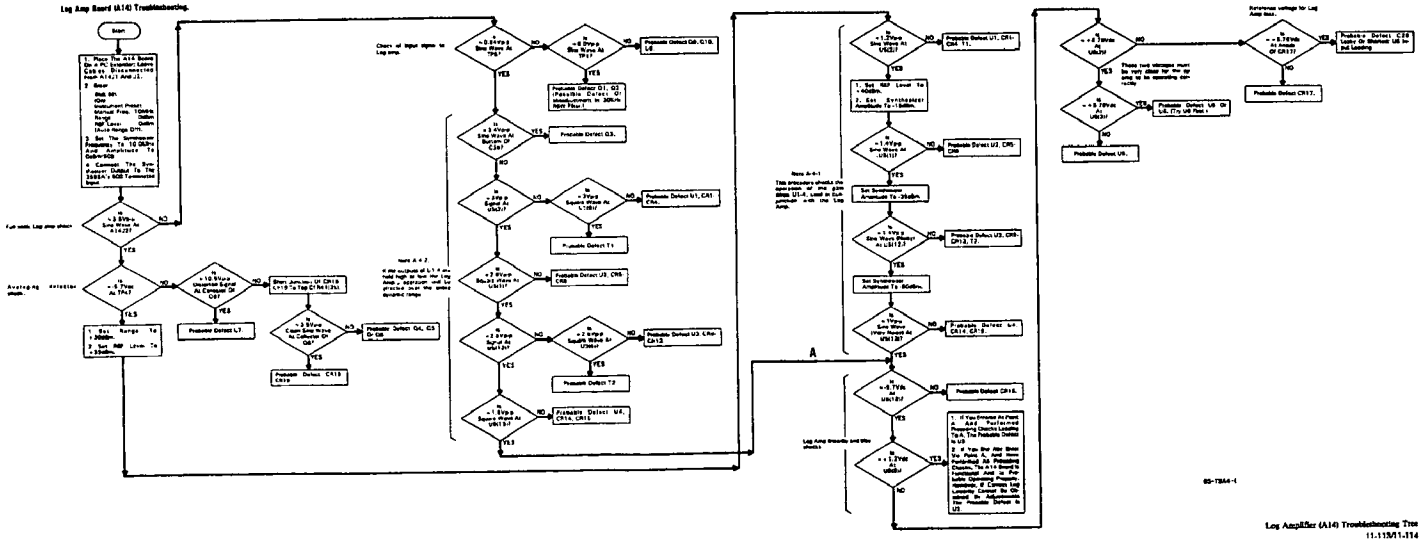


Log Amplifier (A14) Troubleshooting Tree

# SERVICE GROUP A-5
# VIDEO FILTER

## Board No. A15
## (Part Number 03585-66515)

### INDEX:



### ADJUSTMENTS:

| Component | Adjusted Parameter | Paragraph Location |
|---|---|---|
| A15R4 | 5V Reference | 5-16 |
| A15R7 | Top Of Screen Reference | 5-16 |
| A15R9 | Reference Level dc Offset | 5-16 |

### TROUBLESHOOTING NOTES:

None

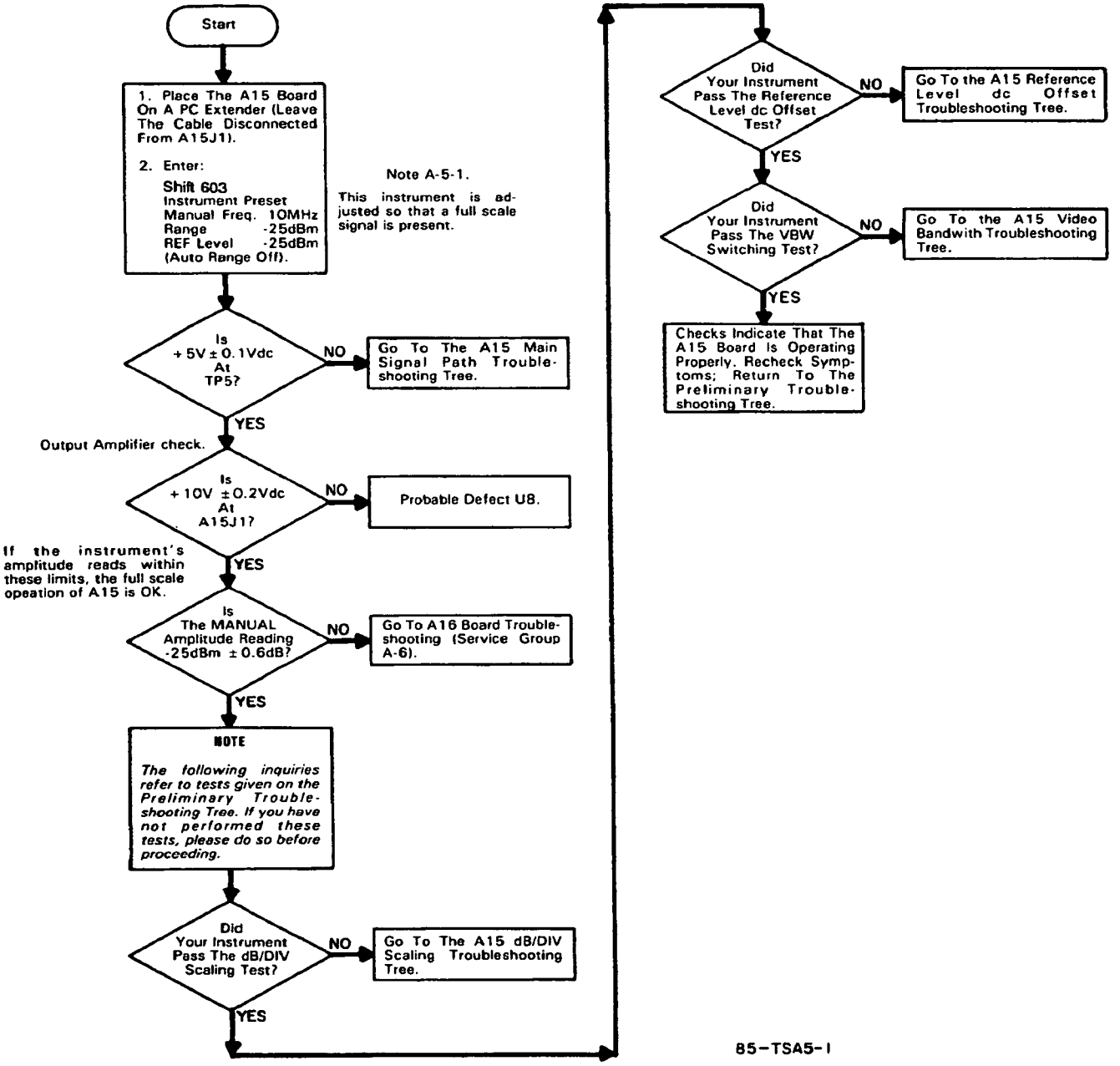


Video Filter (A15) Troubleshooting Tree

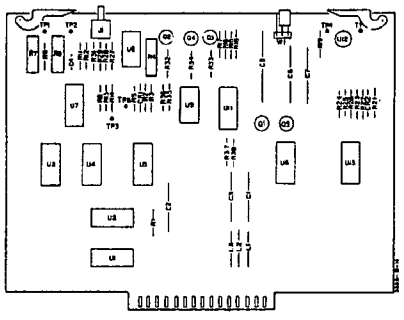

A15
03585-66516

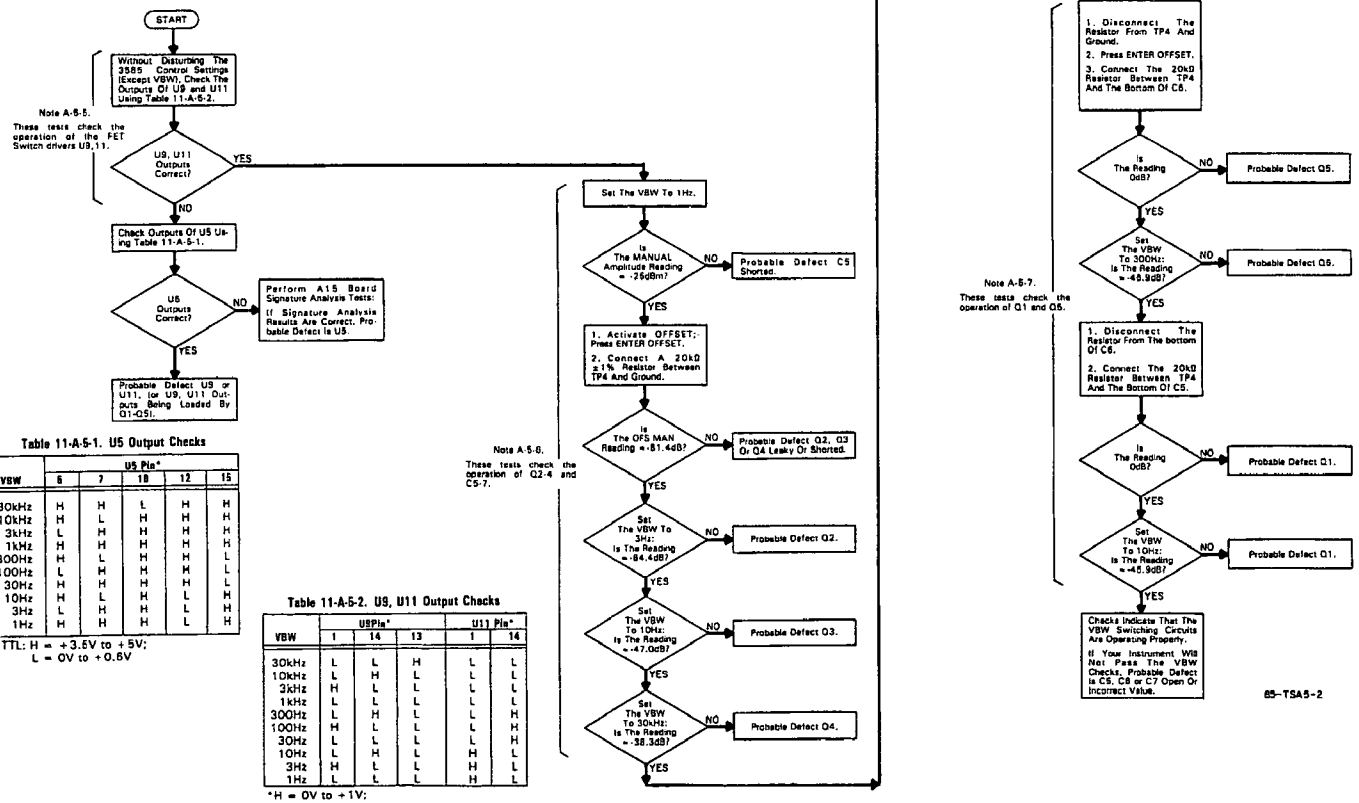


**Table 11-A-5-1. U5 Output Checks**

| VBW | U5 Pin* | | | | |
|---|---|---|---|---|---|
| | 6 | 7 | 10 | 12 | 15 |
| 30kHz | H | H | L | H | H |
| 10kHz | H | L | H | H | H |
| 3kHz | L | H | H | H | H |
| 1kHz | H | H | H | H | H |
| 300Hz | H | L | H | H | L |
| 100Hz | L | H | H | H | L |
| 30Hz | H | H | H | H | L |
| 10Hz | H | L | H | L | H |
| 3Hz | L | H | H | L | H |
| 1Hz | H | H | H | L | H |

*TTL: H = +3.5V to +5V;
L = 0V to +0.6V

**Table 11-A-5-2. U9, U11 Output Checks**

| VBW | U9Pin* | | | U11 Pin* | |
|---|---|---|---|---|---|
| | 1 | 14 | 13 | 1 | 14 |
| 30kHz | L | L | H | L | L |
| 10kHz | L | H | L | L | L |
| 3kHz | H | L | L | L | L |
| 1kHz | L | L | L | L | L |
| 300Hz | L | H | L | L | H |
| 100Hz | H | L | L | L | H |
| 30Hz | L | L | L | L | H |
| 10Hz | L | H | L | H | L |
| 3Hz | H | L | L | H | L |
| 1Hz | L | L | L | H | L |

*H = 0V to +1V;
L = -15V (nominal)

A15 Video Bandwidth Switching Troubleshooting Tree

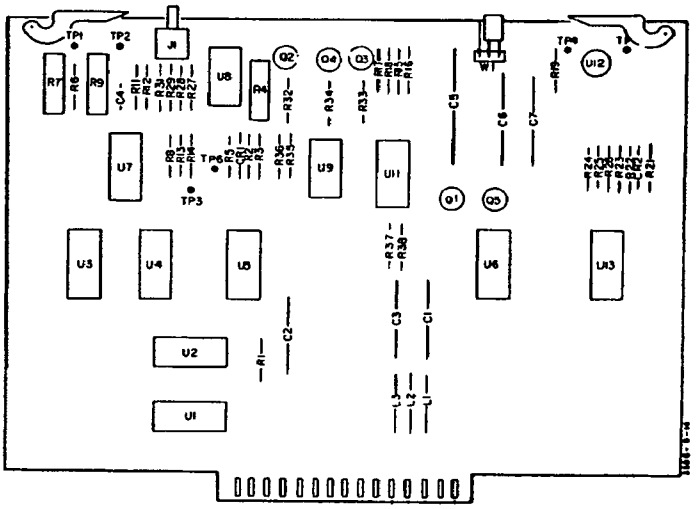


A15
03585-68515

**Table 11-A-5-4. U6 Output Checks**

| dB/DIV | U6 Pin 15 | U6 Pin 12 | U6 Pin 7 | U6 Pin 10 |
|---|---|---|---|---|
| 10dB | L | H | H | H |
| 5dB | H | L | H | H |
| 2dB | H | H | L | H |
| 1dB | H | H | H | L |

H = +3.5V + 5V;
L = 0V to +0.6V.

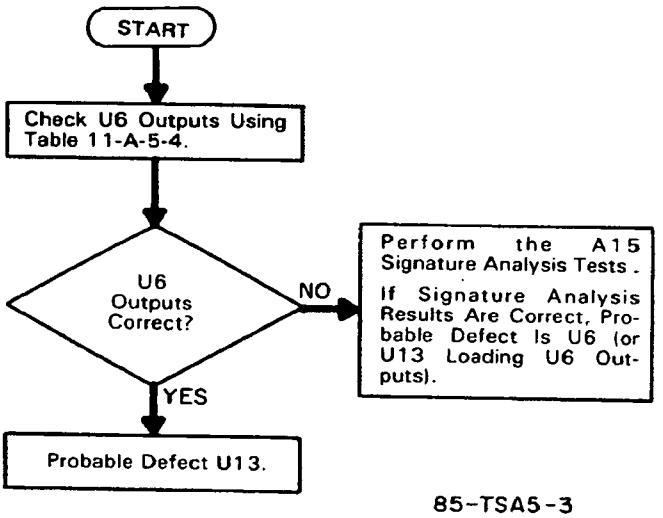


85-TSA5-3

A15 dB/DIV Scaling Troubleshooting Tree

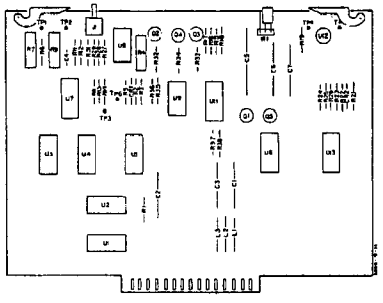

A15
02985-66518

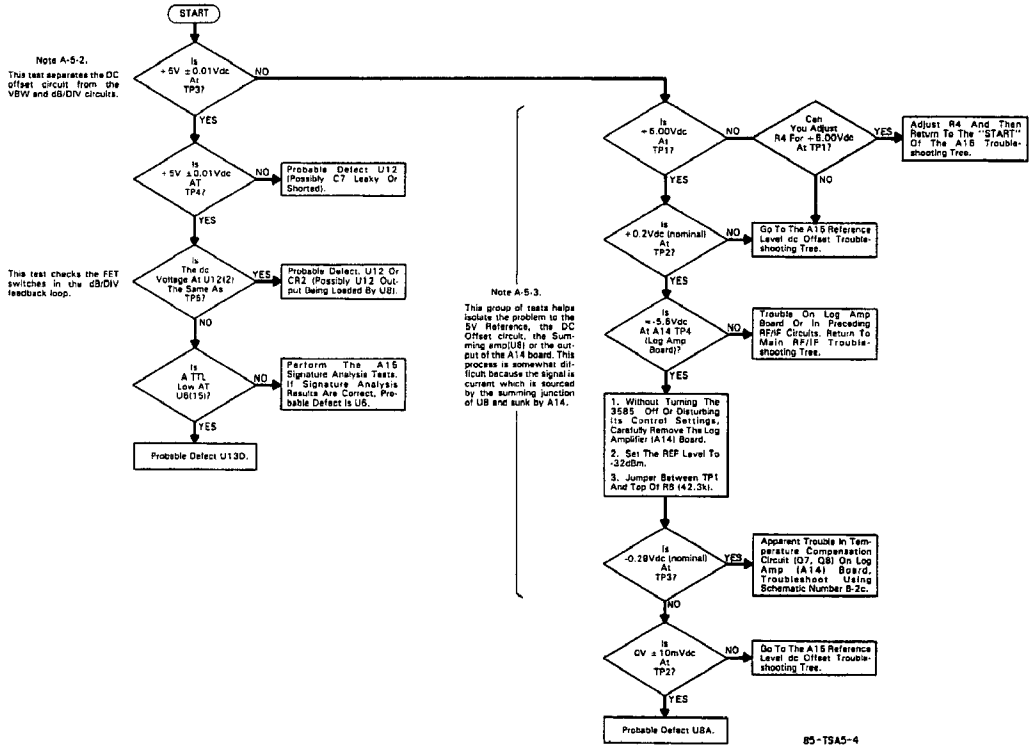


A15 Main Signal Path Troubleshooting Tree

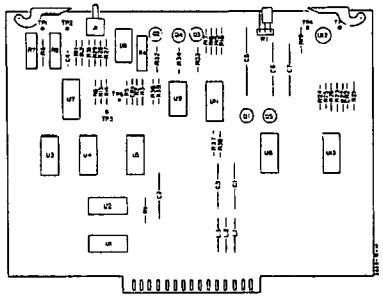

A15
83565-68515

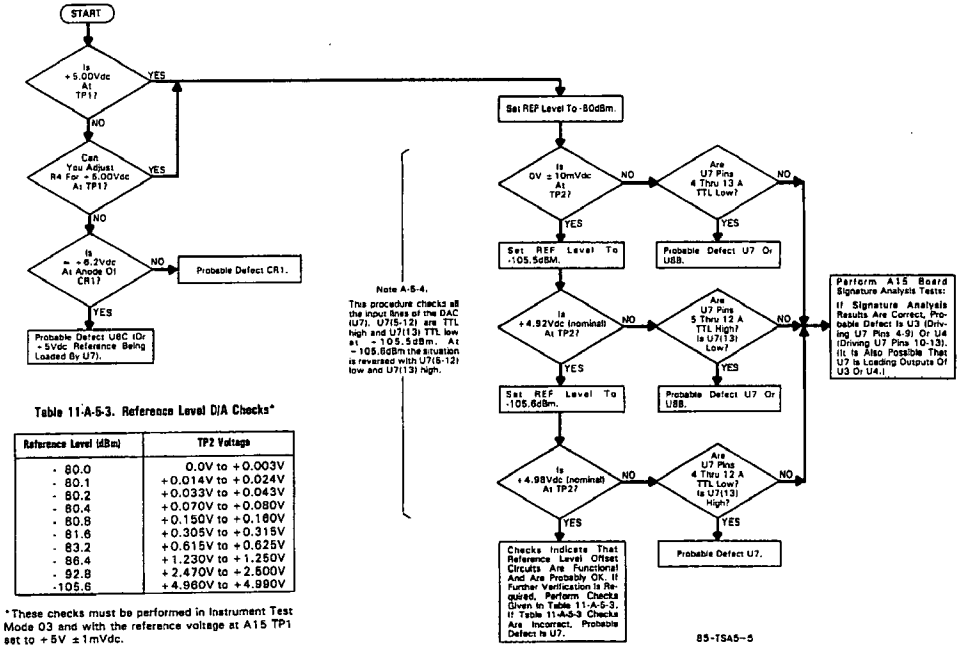


Note A-5-4.
This procedure checks all the input lines of the DAC (U7). U7(5-12) are TTL high and U7(13) TTL low at -105.5dBm. At -105.6dBm the situation is reversed with U7(5-12) low and U7(13) high.

**Table 11-A-5-3. Reference Level D/A Checks***

| Reference Level (dBm) | TP2 Voltage |
|---|---|
| -80.0 | 0.0V to +0.003V |
| -80.1 | +0.014V to +0.024V |
| -80.2 | +0.033V to +0.043V |
| -80.4 | +0.070V to +0.080V |
| -80.8 | +0.150V to +0.160V |
| -81.6 | +0.305V to +0.315V |
| -83.2 | +0.615V to +0.625V |
| -86.4 | +1.230V to +1.250V |
| -92.8 | +2.470V to +2.500V |
| -105.6 | +4.960V to +4.990V |

*These checks must be performed in Instrument Test Mode 03 and with the reference voltage at A15 TP1 set to +5V ±1mVdc.

A15 Reference Level dc Offset Troubleshooting Tree
11-123/11-124

**A15 Board Signature Analysis Tests.**

Equipment Required: Signature Analyzer.

a. Turn the instrument off.

b. On the A83 board (tabs = Orange/Gray), set DIP test switches (SW101) positions 1 and 6 "closed." All others should be "open."

c. Connect the Signature Analyzer as follows:

START and STOP ..... A83TP4
CLOCK ..... A83U9(8)
GND ..... A83TP1

d. Set the Signature Analyzer controls as follows:

START ..... (in)
STOP ..... (out)
CLOCK ..... (out)
HOLD ..... off (out)
SELF TEST ..... off (out)

e. Turn the 3585 (and Signature Analyzer)on.

f. At this point, the CRT screen should be blank, the front-panel LED indicators should be flashing and the four LEDs on A83 should be on.

To verify that your test setup is correct and the test routine is running properly, touch the Signature Analyzer test probe to A15 pin A13 (+5Vdc). The signature should be "IUSC."

g. Check for the following signatures at A15 pins A3 thru A10:

| A15 Pin | Signature |
|---|---|
| A3 | 9900 |
| A4 | C059 |
| A5 | 4CAH |
| A6 | 37U3 |
| A7 | 9CAH |
| A8 | 2863 |
| A9 | PPCC |
| A10 | C74C |

1. If signatures are correct, go to Step h.

2. If signatures are incorrect, troubles is on I/O board (A83, Service Group C), or lines are being loaded by A15 board of A17-A19 IF boards.

h. check for the following signatures at U2 pins 12 thru 15:

| U2 Pin | Signature |
|---|---|
| 12 | 825F |
| 13 | 9AC9 |
| 14 | 7C75 |
| 15 | 6181 |

1. If signatures are correct, no further Signature Analysis Tests are required. Disconnect the Signature Analyzer, set the A83 test swtiches to the "OPEN" position and correct the defect indicated on the A15 Troubleshooting Tree.

2. If signatures are correct, go to step i.

i. Check for the following signatures at U2 pins 1 thru 4:

| U2 Pin | Signature |
|---|---|
| 1 | PF7U |
| 2 | A7PO |
| 3 | C9FP |
| 4 | AP4U |

1. If signatures are correct, Probable Defect is U2.

2. If signatures are incorrect, Probable Defect is U1 (or U1 outputs being loaded by U2).

# SERVICE GROUP A-6
# ANALOG-TO-DIGITAL CONVERTER

## Board No. A16
## Part Number 03585-66516

## INDEX:



## ADJUSTMENTS:

| Component | Adjusted Parameter | Paragraph Location |
|---|---|---|
| A16R21 | Reference Voltage for A/D Converter | 5-16 |
| A16R19 | Full Scale Marker Amplitude | 5-16 |

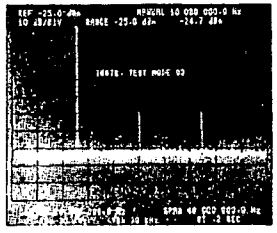

**Figure 11-A-6-1. Normal Display - Test Mode 03 Integrated**

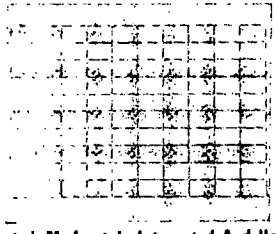

**Figure 11-A-6-2. Integrated, Moderately Integrated And Heavily Integrated Display**

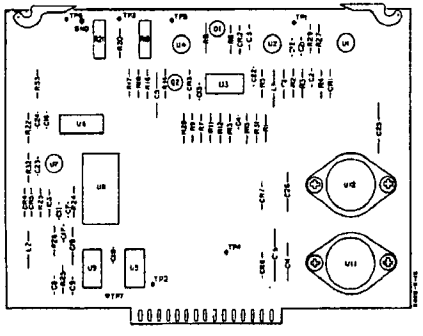

A16
03585-66518

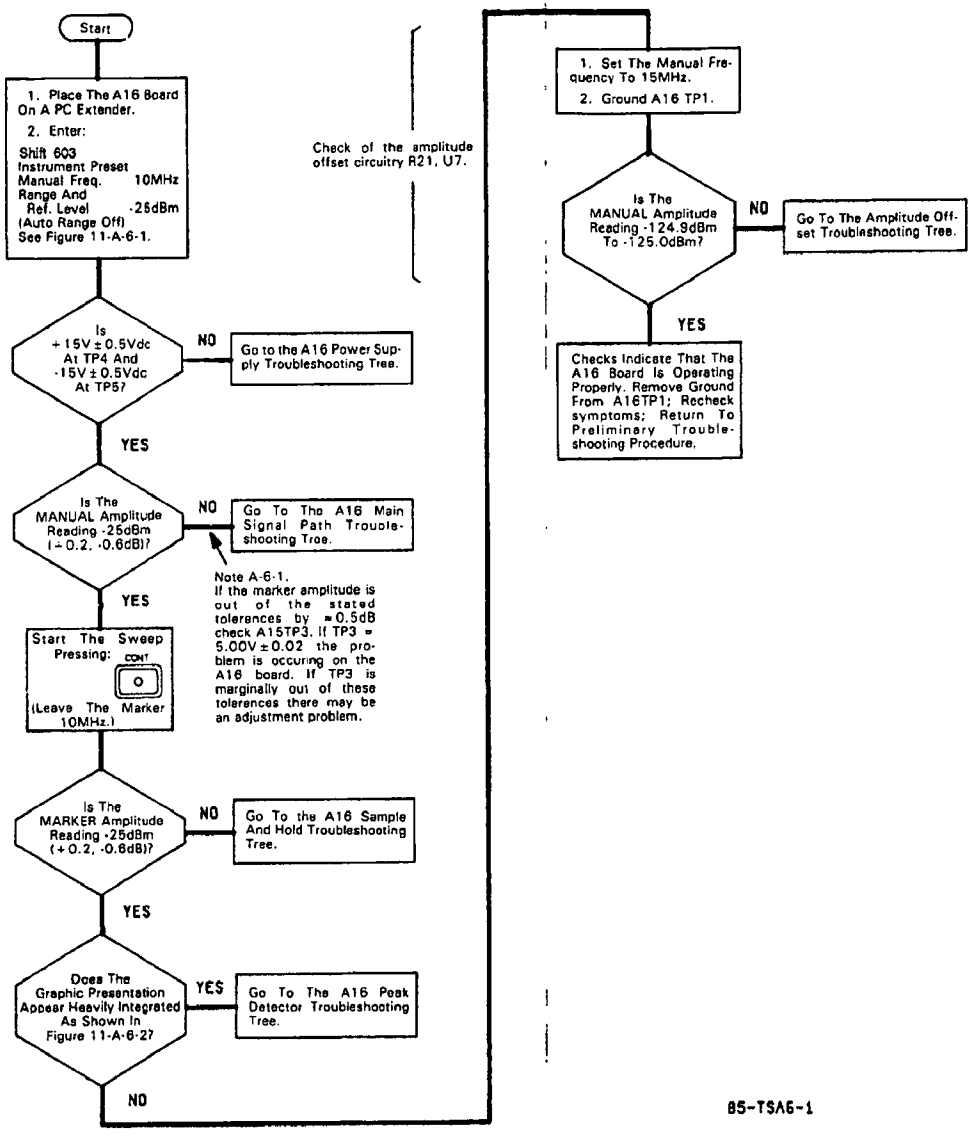


85-TSA6-1

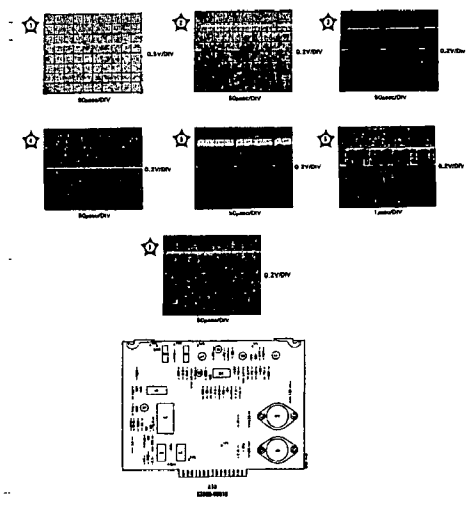


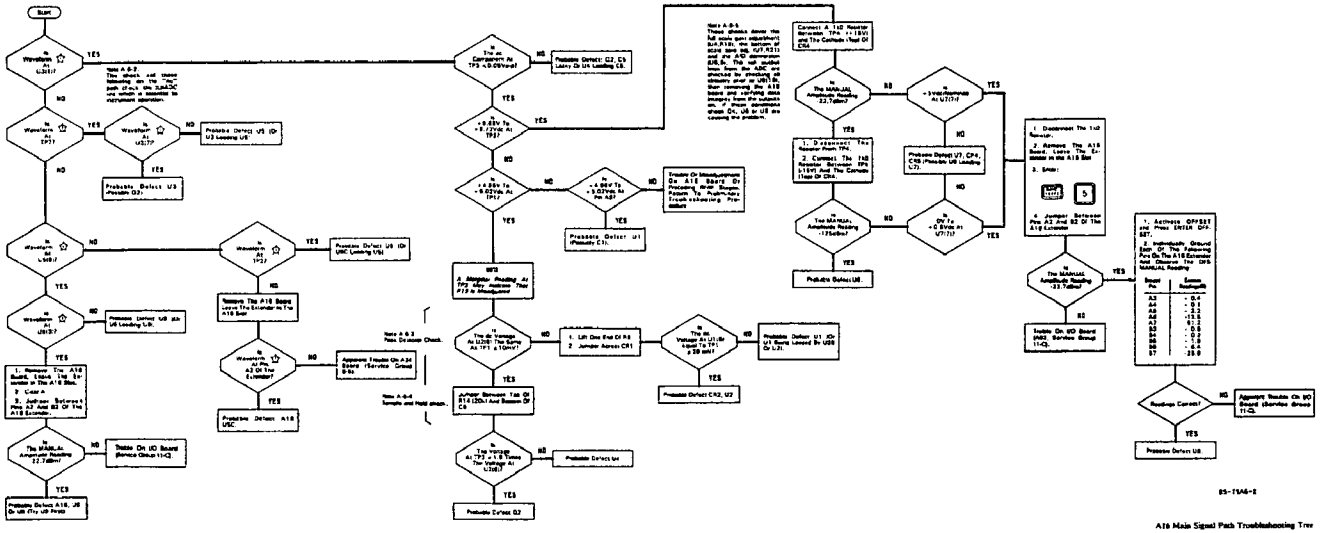


A18 Main Signal Path Troubleshooting Tree

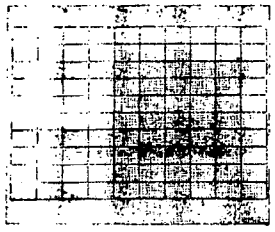

**Figure 11-A-6-3. Heavily Integrated Display**

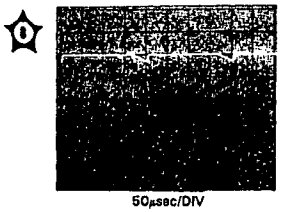


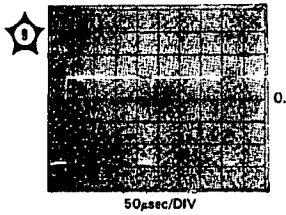


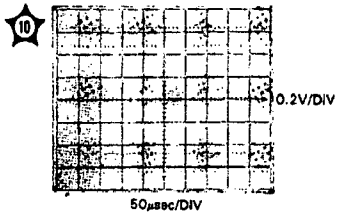


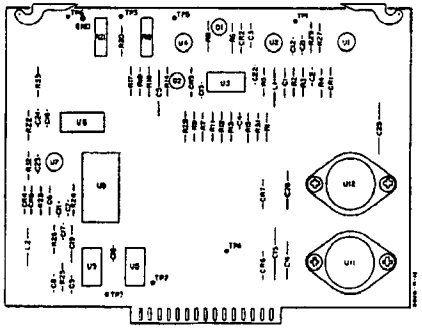

A15
03505-60516

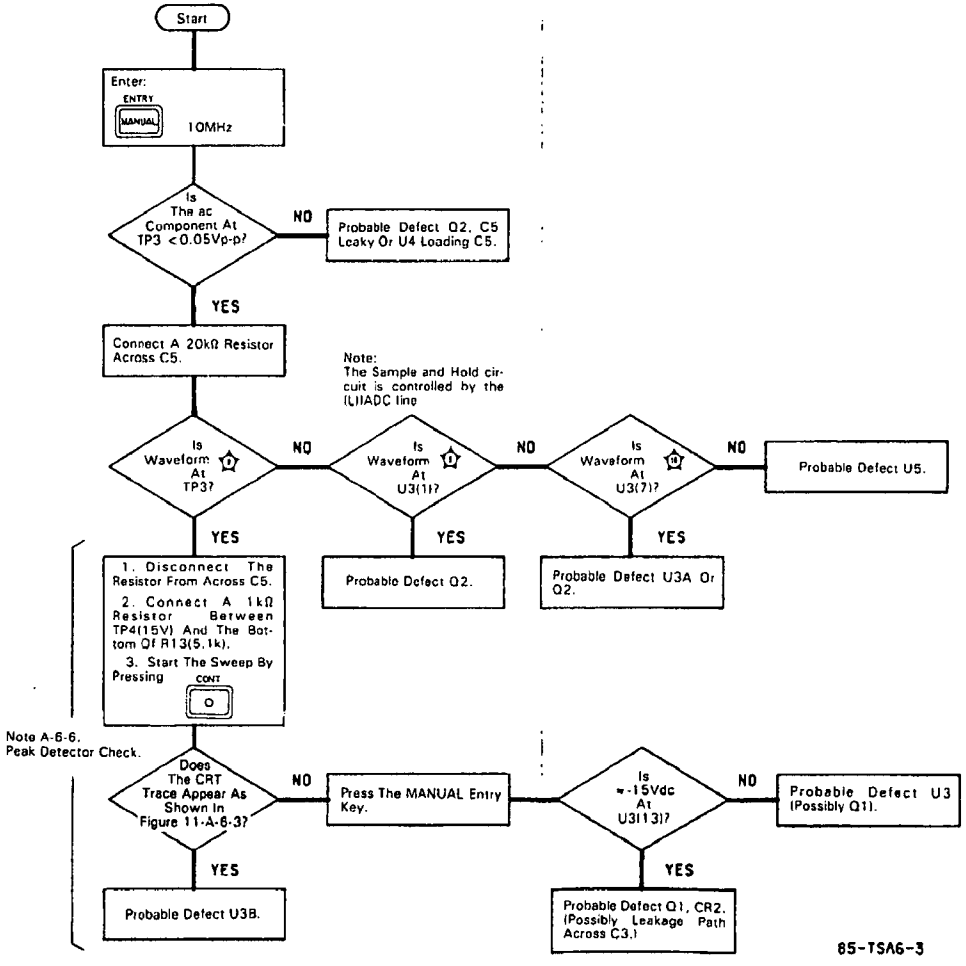


A16 Sample and Hold Troubleshooting Tree
11-133/11-134

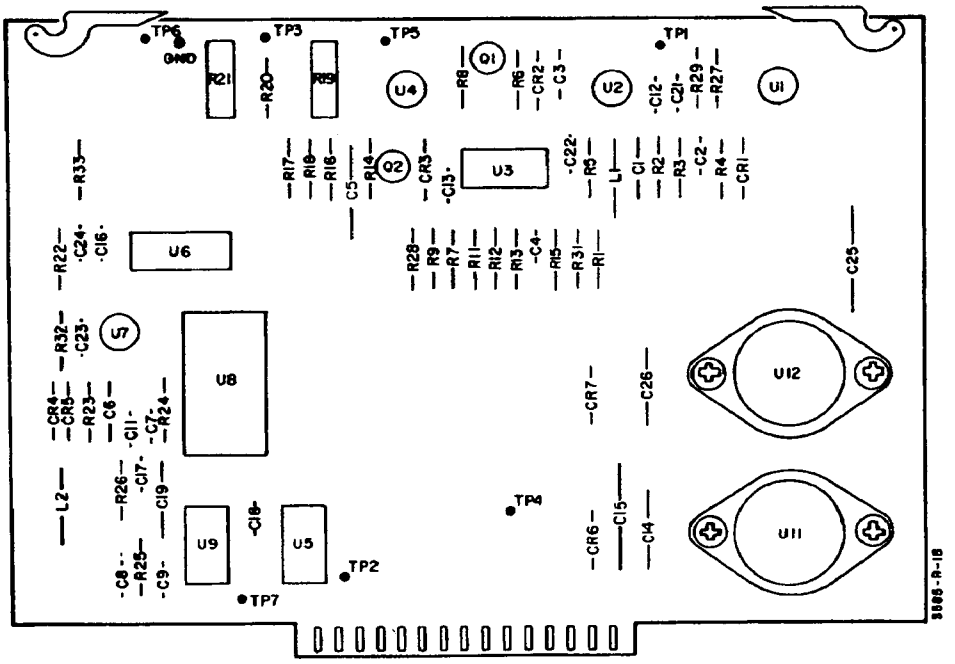


A16
03585-66516

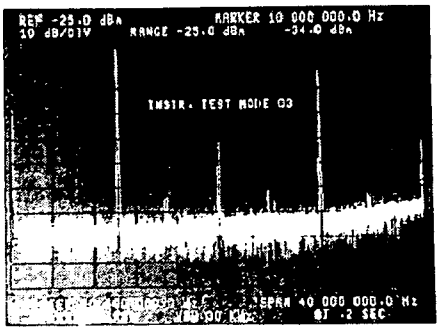


**Figure 11-A-6-4. Display With Peak Detector Disabled**

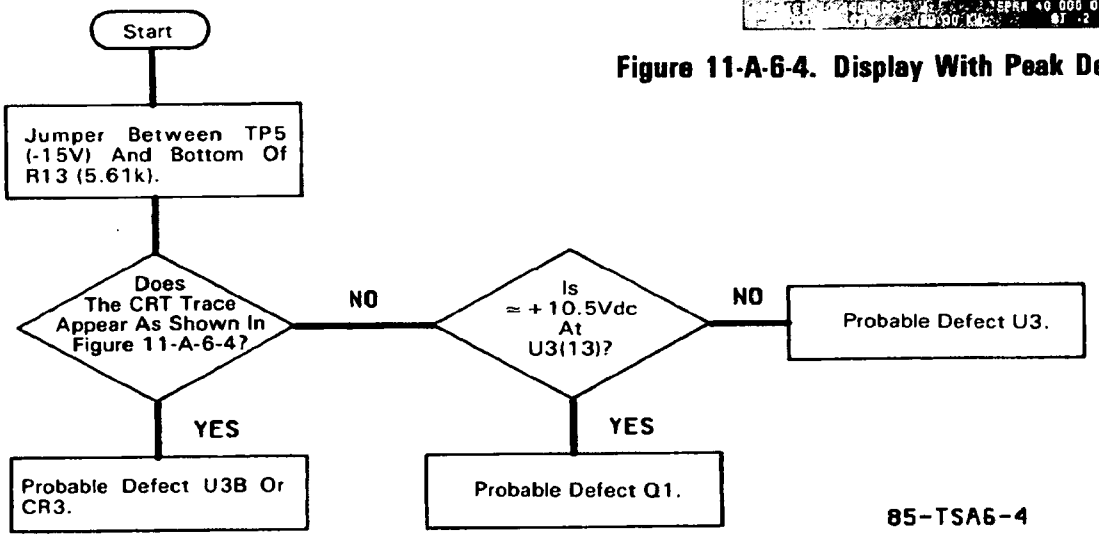


85-TSA6-4

A16 Peak Detector Troubleshooting Tree

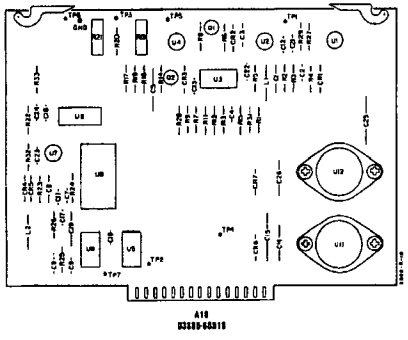


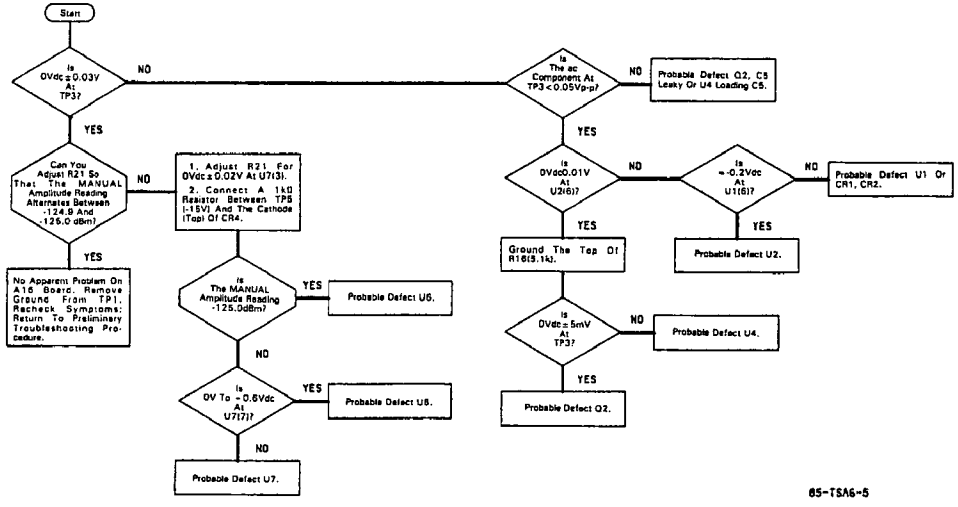


A16 Amplitude Offset Troubleshooting Tree

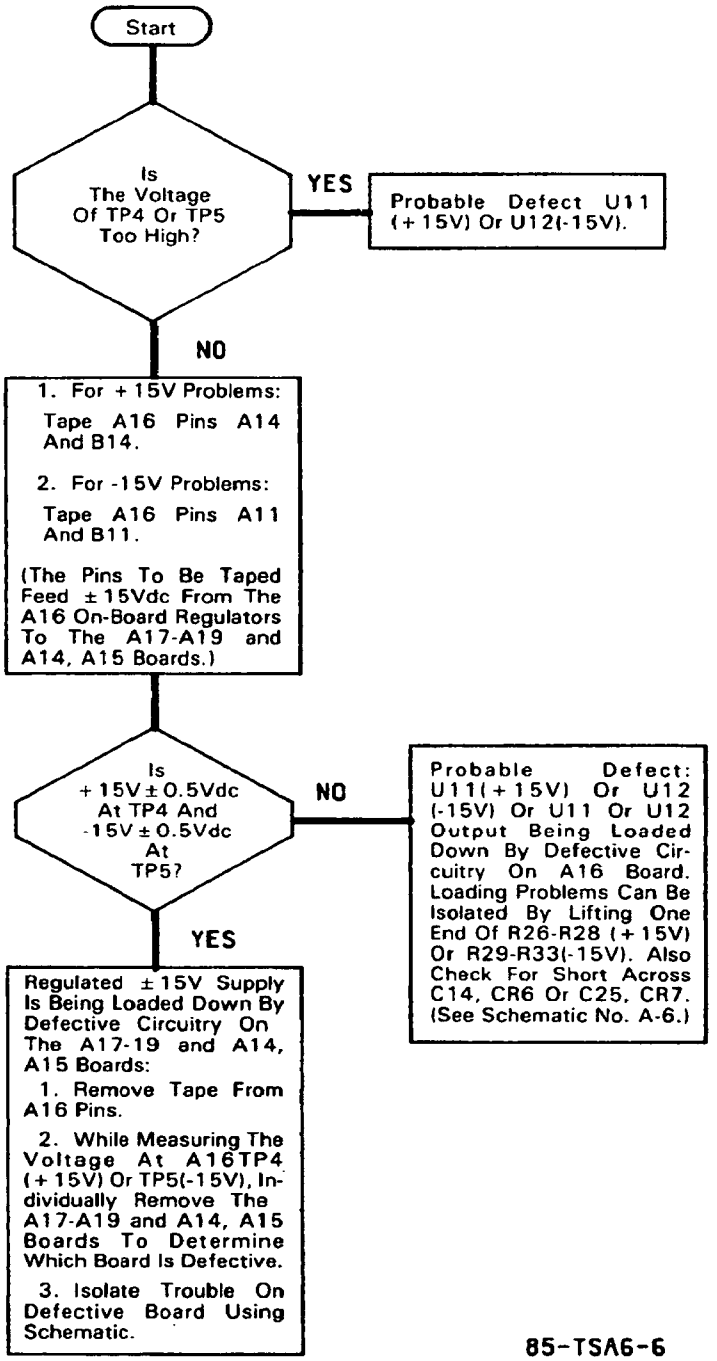


A16 Power Supply Troubleshooting Tree
11-139/11-140

# SERVICE GROUP B
# LOCAL OSCILLATOR
## Board Number's A21-34

**INDEX:**



**EQUIPMENT REQUIRED:**

| Instrument | Required Characteristics | Recommended Model No. |
|---|---|---|
| Digital Voltmeter | 4½ digits, dc Accuracy ±0.05% ± 3 digits | HP Model 3466A |
| Ocilloscope (100MHz) | Bandwidth dc to 100MHz Sensitivity 0.05V/Div | HP Model 1740A |
| DC Power Supply | Regulated, Variable ±5V voltage/current monitor | HP Model 6216C |
| Frequency Synthesizer | Range 200Hz to 80MHz, Amplitude Accuracy ±0.2dB(50Ω) | HP Model 3335A |
| Digital Signature Analyzer | N.A. | HP Model 5006A |
| Divider Probe | 1:1, ≤40pf | HP Model 10021A |
| Divider Probe | 10:1, 1MΩ, ≤12pf | HP Model 10436A |
| Frequency Counter | Range 1kHz to 150MHz, External Ref. Input | HP Model 5382A or 5384A |

**Table 11-B-1. LO Troubleshooting Table.**

Set-up Conditions:

Continuous Sweep
Step and Ref LED off

Good = blinking; Bad = off or on

| | Res BW = 3KHz | | Res BW = 10KHz | Problem Areas (Check Boards In Order Shown) |
|---|---|---|---|---|
| | FRN | SUM | FRN | |
| | Good | Good | Bad | A31, 27, 24, (A32 bias) |
| | Good | Bad | Good | A24, 25, 27, 28, (A23,26,31) |
| | Good | Bad | Bad | A27, 24, 22, (A31) |
| | Bad | Good | Good | A31, (A32 S/H) |
| | Bad | Good | Bad | A31, 33, 32, 34, A21, (A27) |
| | Bad | Bad | Good | A31, (A32 S/H) |
| | Bad | Bad | Bad | A31, 33, 32, 34, A21, (A27) |

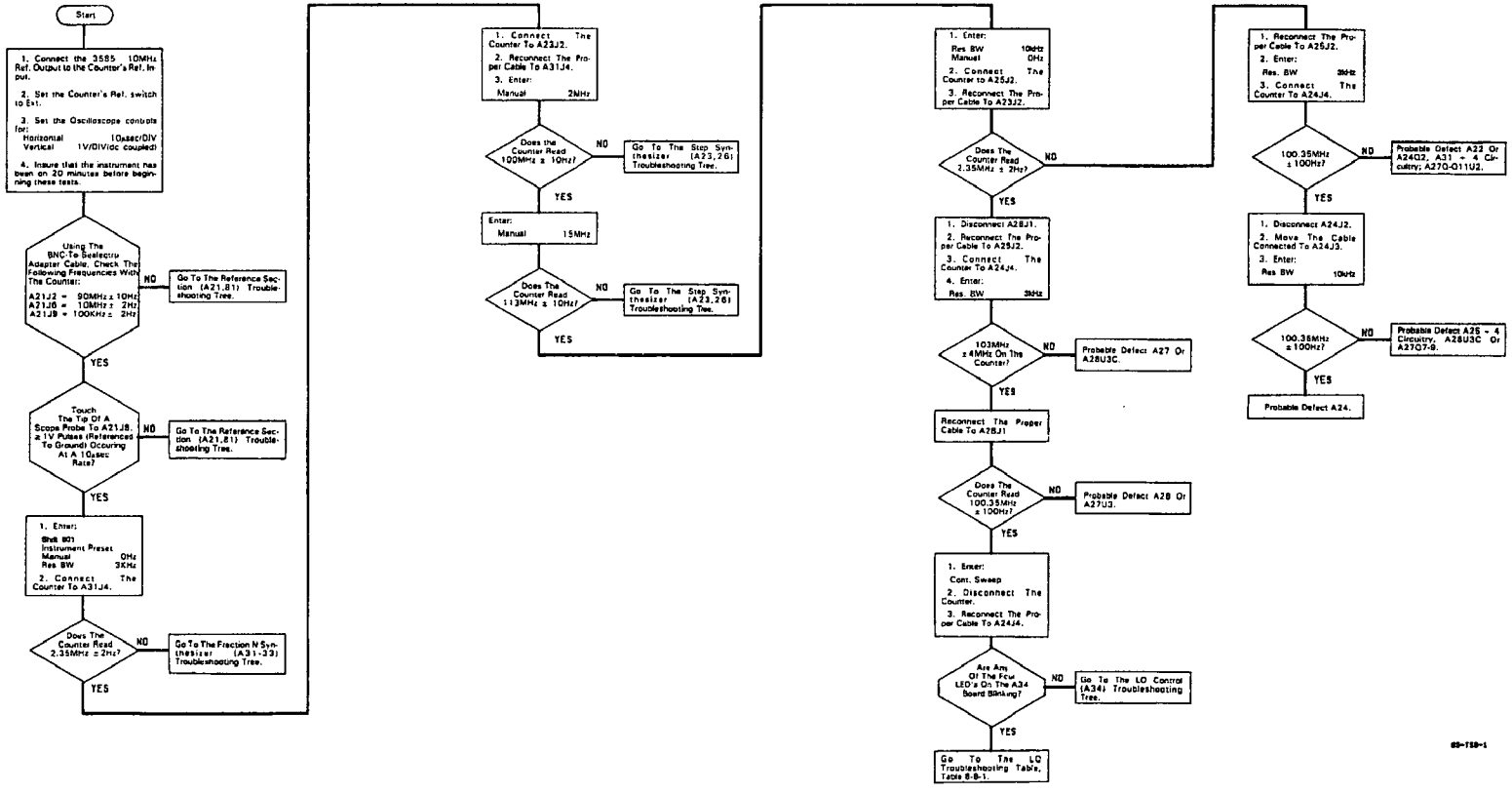


Main Local Oscillator Troubleshooting Tree

# SERVICE GROUP B-1
# REFERENCE SECTION

## Board No. A21,81
## Part Number 03585-66521; 03585-66581

**INDEX:**



**ADJUSTMENTS:**

| Component | Adjusted Parameter | Paragraph Location |
|---|---|---|
| A21R125 | 90HMz Center Frequency | 5-7 |
| A81R9 | Oven Output Shut-off Control | 5-8 |
| A81U1 | Course Oven Frequency | 5-9 |
| A81R2 | Fine Oven Frequency | 5-9 |

**TROUBLESHOOTING NOTES:**

None

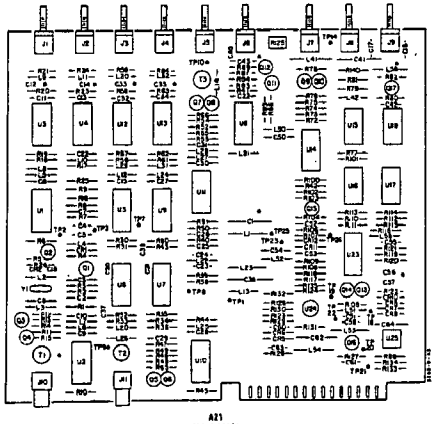

A21
03665-66521

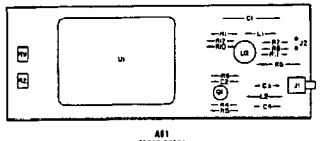

A81
03665-66581

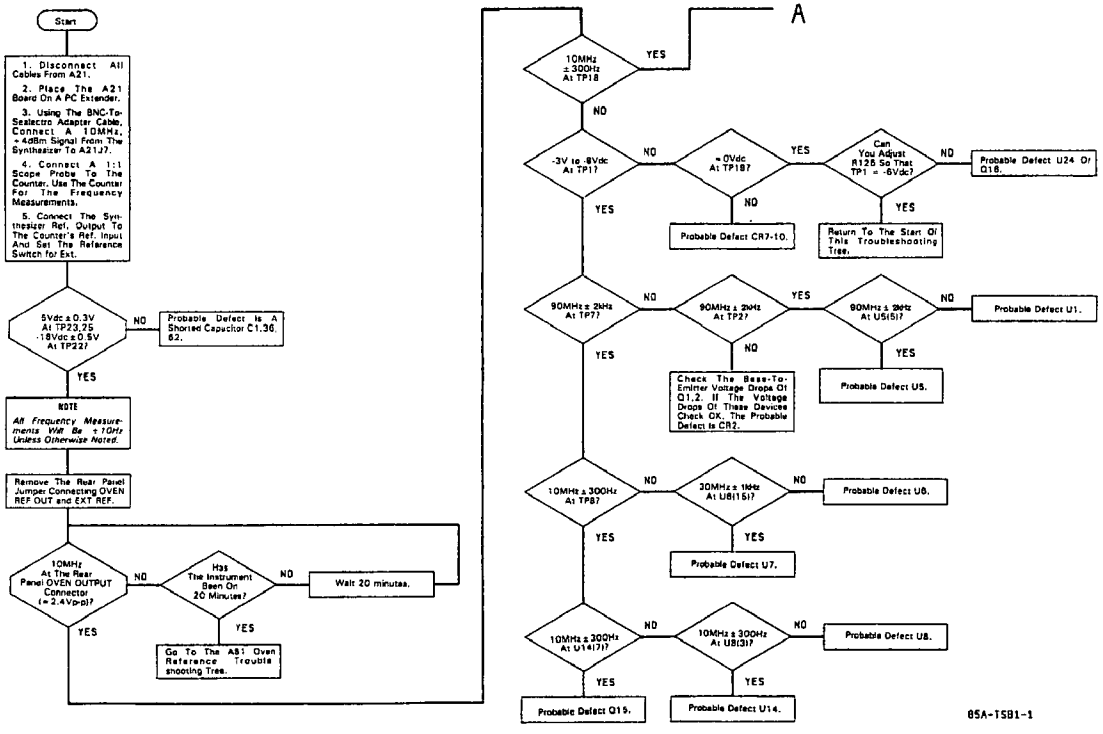

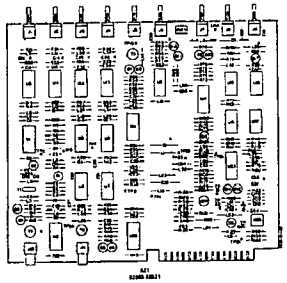

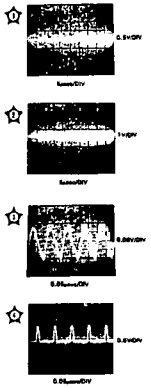

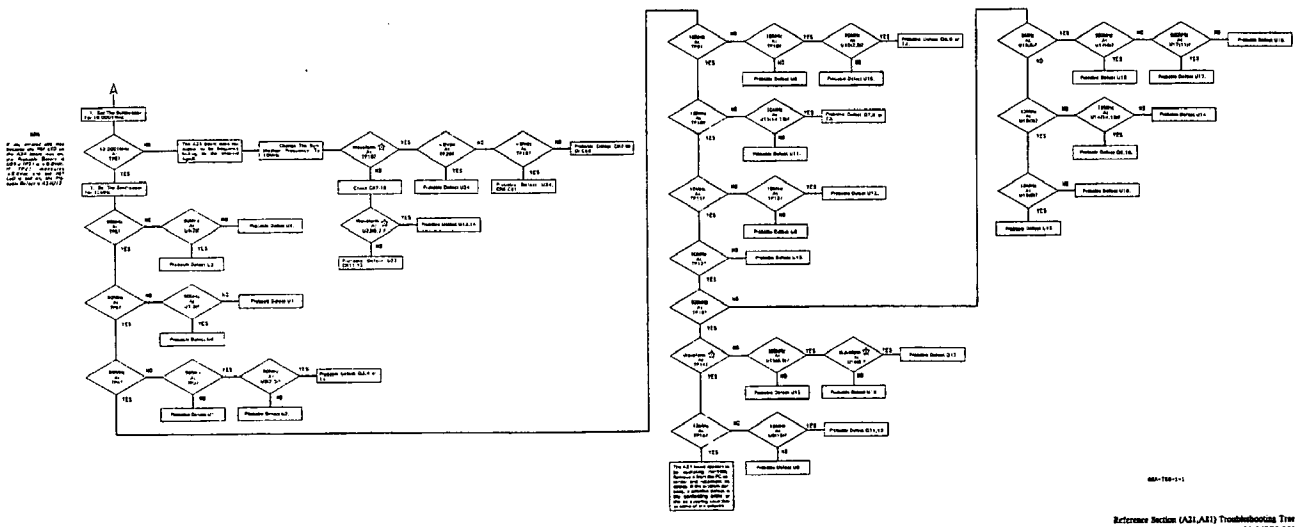

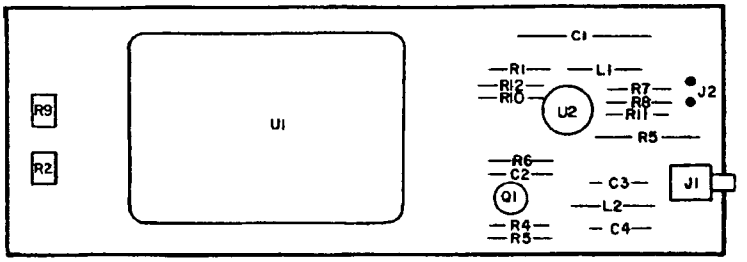


A81
03585-66581

START

1. To access the Oven Reference board, remove the top trim strip from the instrument's front frame.

2. Remove the screws at the left and right corners and the one above the CONT key on the top of the front frame.

3. The top edge of the front panel will now come out toward you with a moderate application of pressure to the back of the front panel.

4. Disconnect the cable from the front panel so that it may be laid aside.

5. The A81 board is now exposed for Troubleshooting.

1.8Vdc ± 0.5V At The Emitter Of Q1?

NO → Is The Top Of R11 ≥ 0.04V Greater Than The Top Of R8?

NO → Adjust A81R9 For ≥ 0.04V Difference (R11 > R8) And Return To Start.

YES → Probable Defect U2.

YES

10MHz, ≈ 2.6Vp-p Signal At The Emitter Of Q1?

NO → ≈ 2.2Vp-p At The Base Of Q1?

NO → Probable Defect U1.

YES → Probable Defect Q1.

YES

10MHz, ≈ 2.6Vp-p Signal At C5?

NO → Probable Defect Is In The Output Filter, C2,3,4 or L2.

YES → Probable Defect Is The Cable Connecting The A81 Board To The Rear Panel.

85A-TSB1-2

A81 Oven Reference Troubleshooting Tree

# SERVICE GROUP B-2
# SUM LOOP

## Board Numbers A22,24,25,27,28
## Part Numbers 03585-66522,-66524,-66525,-66527,-66528

### INDEX:



### ADJUSTMENTS:

| Component | Adjusted Parameter | Paragraph Location |
|---|---|---|
| A22L1 | VTO Frequency | 5-15 |
| A27R2 | Sum Loop Initial Point | 5-15 |
| A27R11 | Slope | 5-15 |

### TROUBLESHOOTING NOTES:

1. When troubleshooting the A22 board it is very important to use the 20:1 resistive divider probe. This probe has very low capacitance and a minimal effect on this sensitive oscillator circuit.

2. Use care when probing the A22 board. The capacitance added by your fingers touching the board can inhibit oscillator operation.

3. In most cases, the amplitude will be correct if the frequency is correct; therefore, it is only necessary to check the frequency.

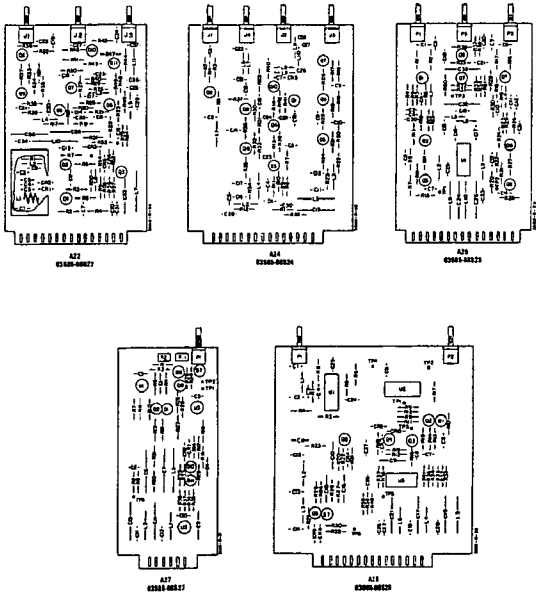


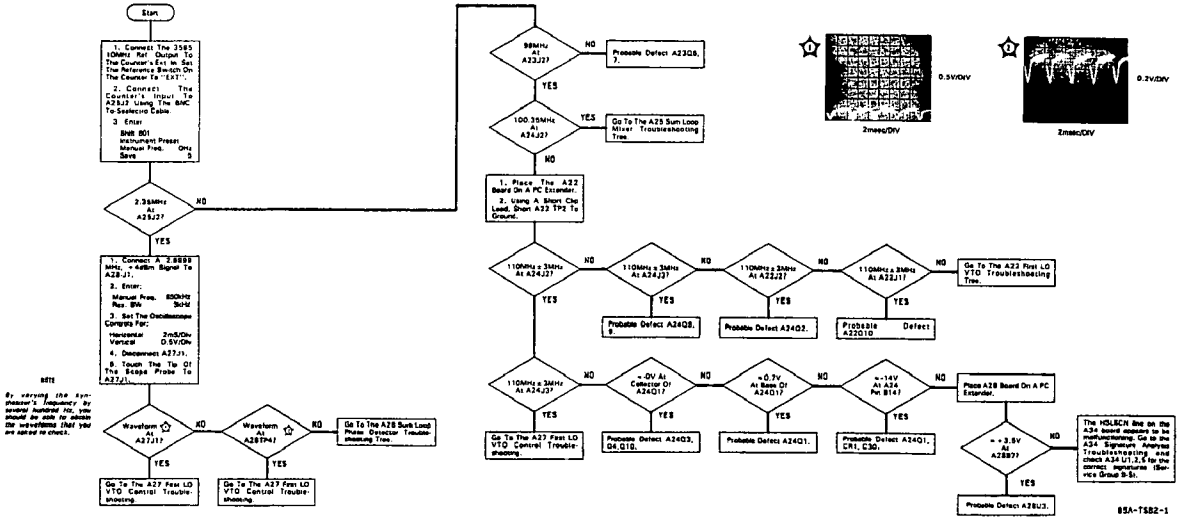


Sum Loop Troubleshooting Tree

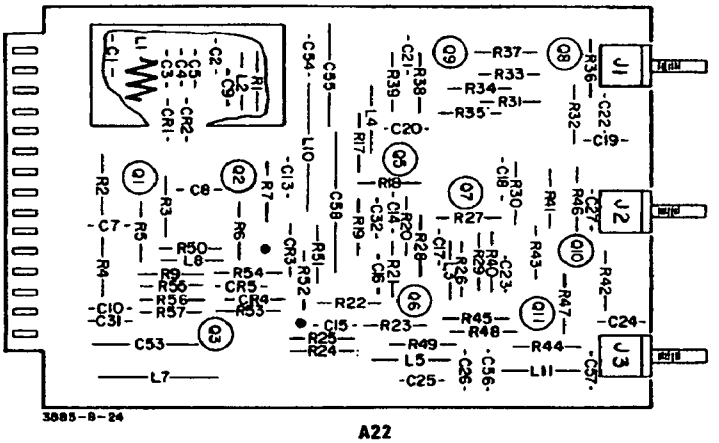


A22
03585-68522

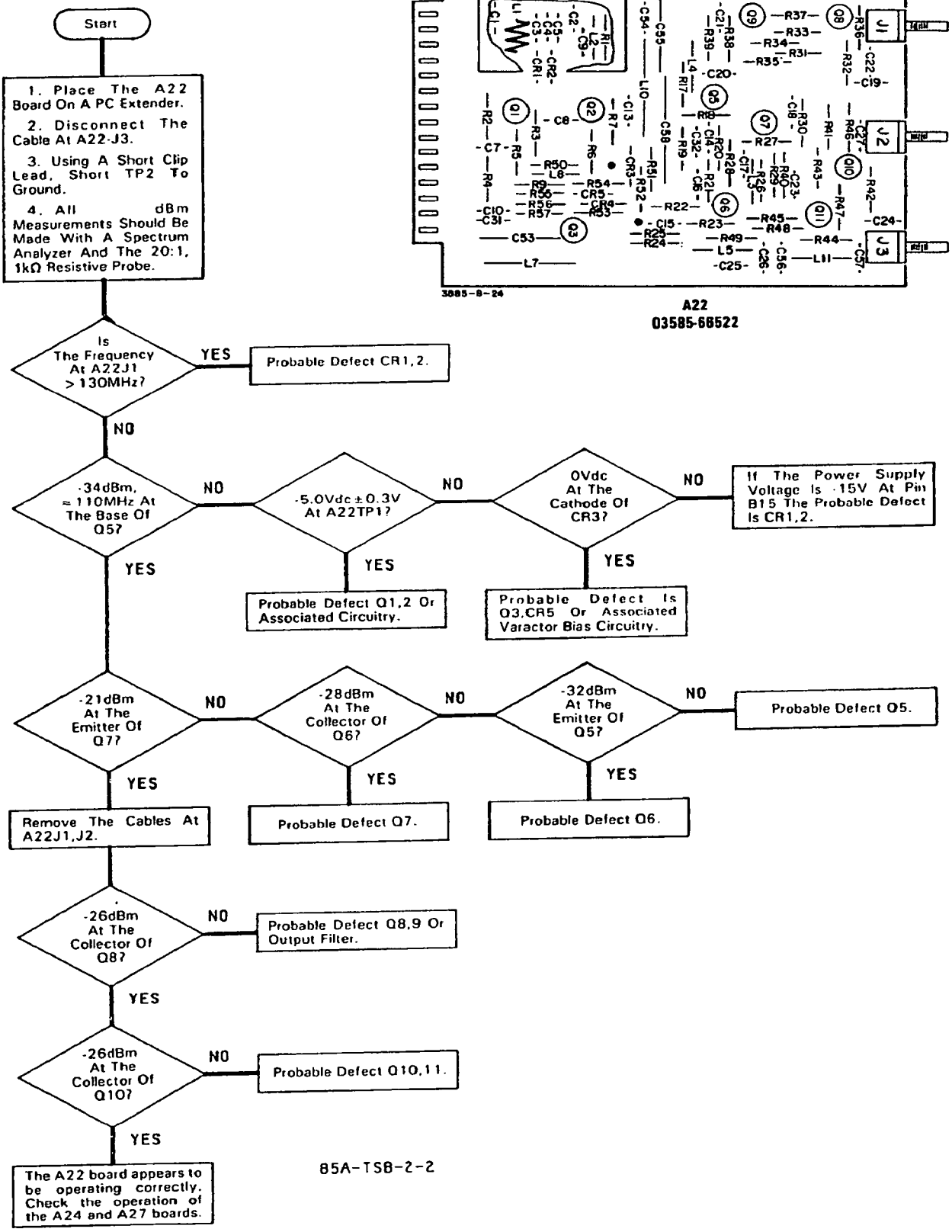


A22 First LO VTO Troubleshooting Tree
11-157/11-158

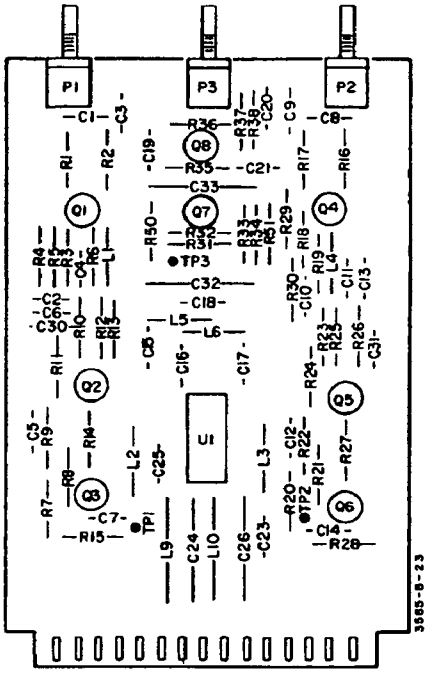


A25
03585-66525

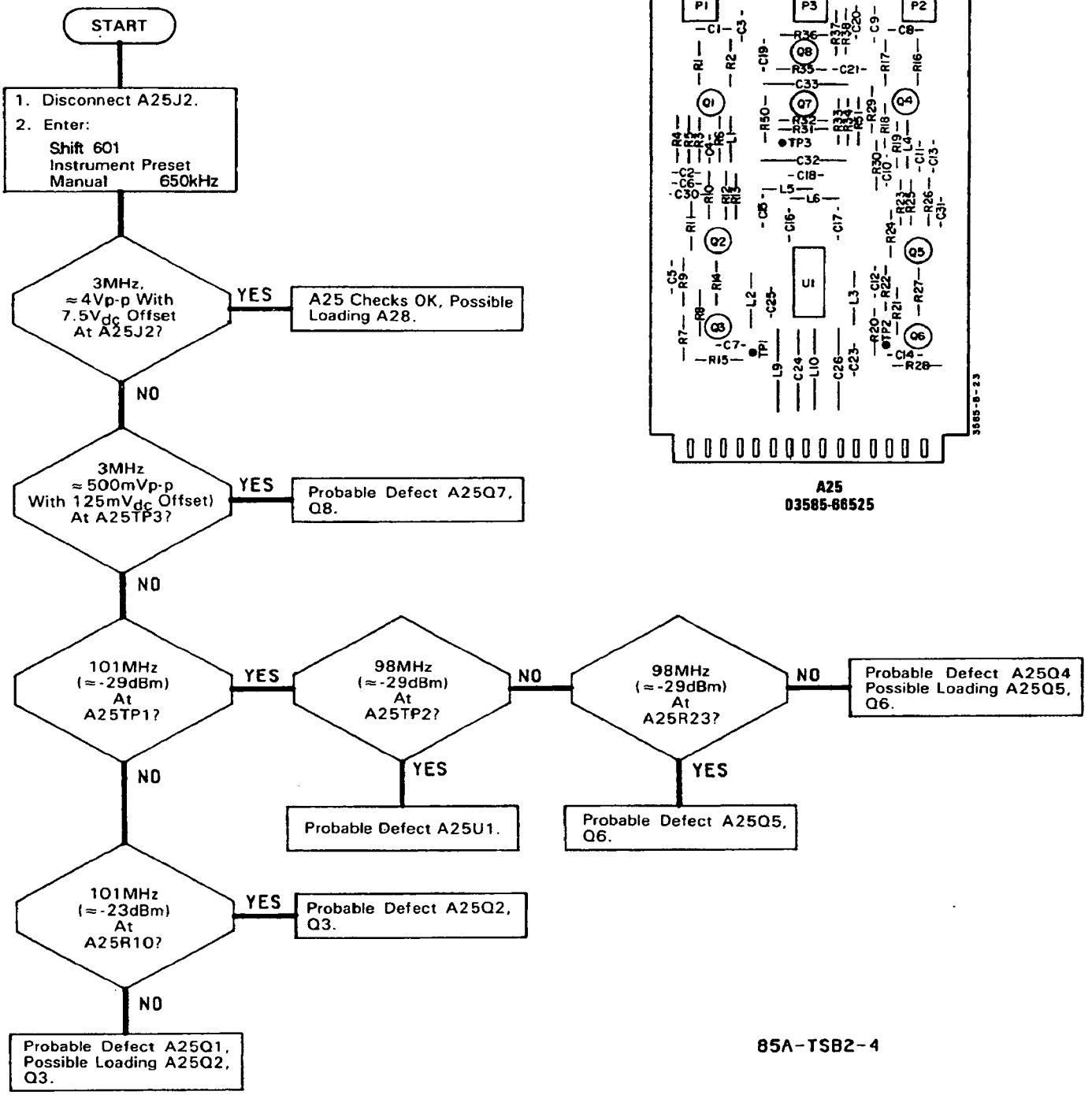


85A-TSB2-4

A25 Sum Loop Mixer Troubleshooting Tree
11-159/11-160

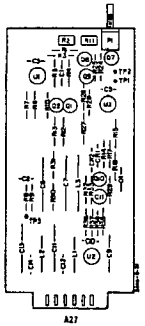


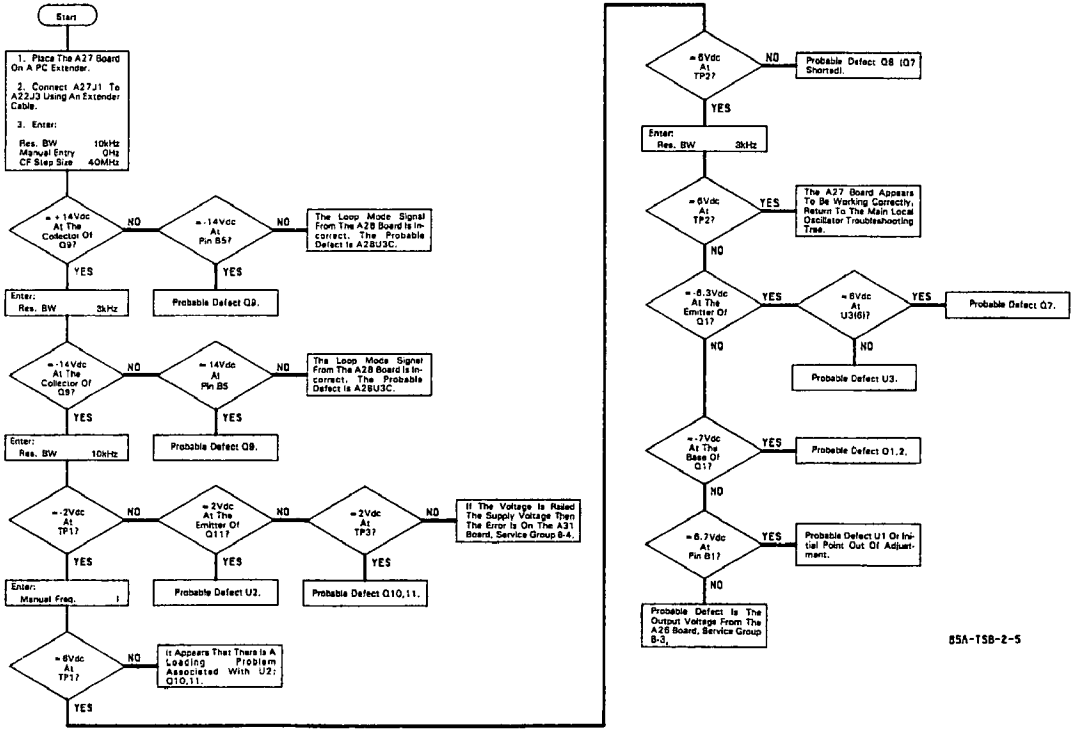


A27 First Lo V To Control Troubleshooting Tree
11-161/11-162

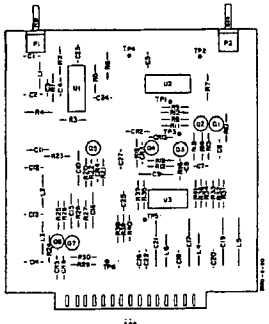

A28
03569-60028

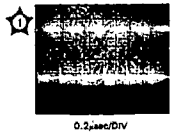

1V/DIV

0.2μsec/DIV

0.2V/DIV

2msec/DIV

0.5V/DIV

0.2μsec/DIV

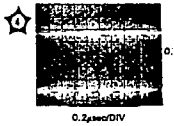

0.2V/DIV

0.2μsec/DIV

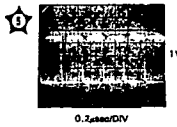

1V/DIV

0.2μsec/DIV

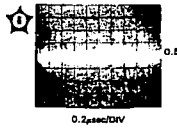

0.5V/DIC

0.2μsec/DIV

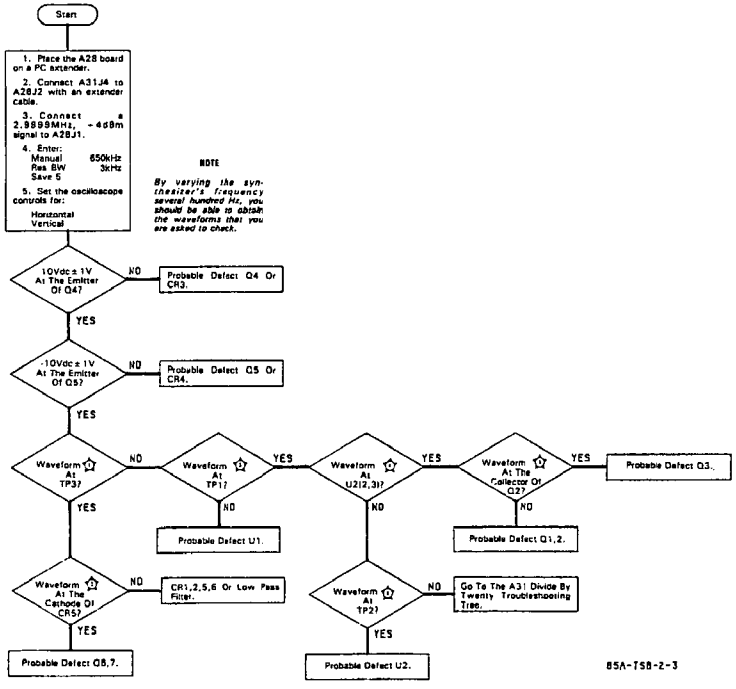


A28 Sum Loop Phase Detector Troubleshooting Tree

# SERVICE GROUP B-3
# STEP LOOP SYNTHESIZER

## Board Numbers A23, A26
## Part Numbers 03585-66523 and 03485-66526

### INDEX:



### ADJUSTMENTS:

| Component | Adjusted Parameter | Paragraph Location |
|---|---|---|
| A23L1 | VTO Frequency | 5-14 |
| A26R75 | Clamp Voltage Reference | 5-14 |

### TROUBLESHOOTING NOTES:

1. When troubleshooting the A23 board it is very important to use the 20:1 resistive divider probe has very low capacitance and a minimal effect on this sensitive oscillator circuit.

2. Use care when probing the A23 board. The capacitance added by your fingers touching the board can inhibit oscillator operation.

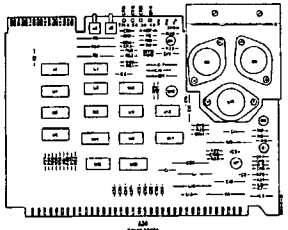

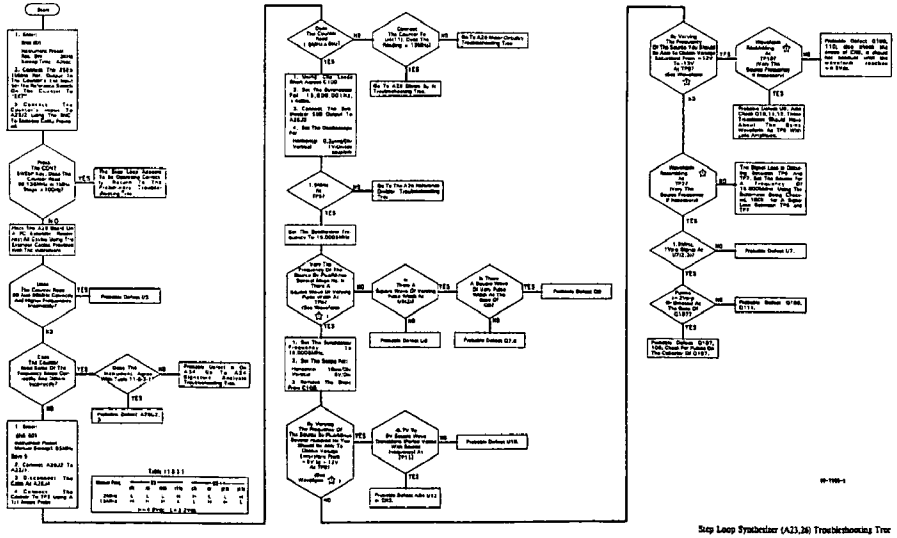

Step Loop Synthesizer (A23,26) Troubleshooting Tree

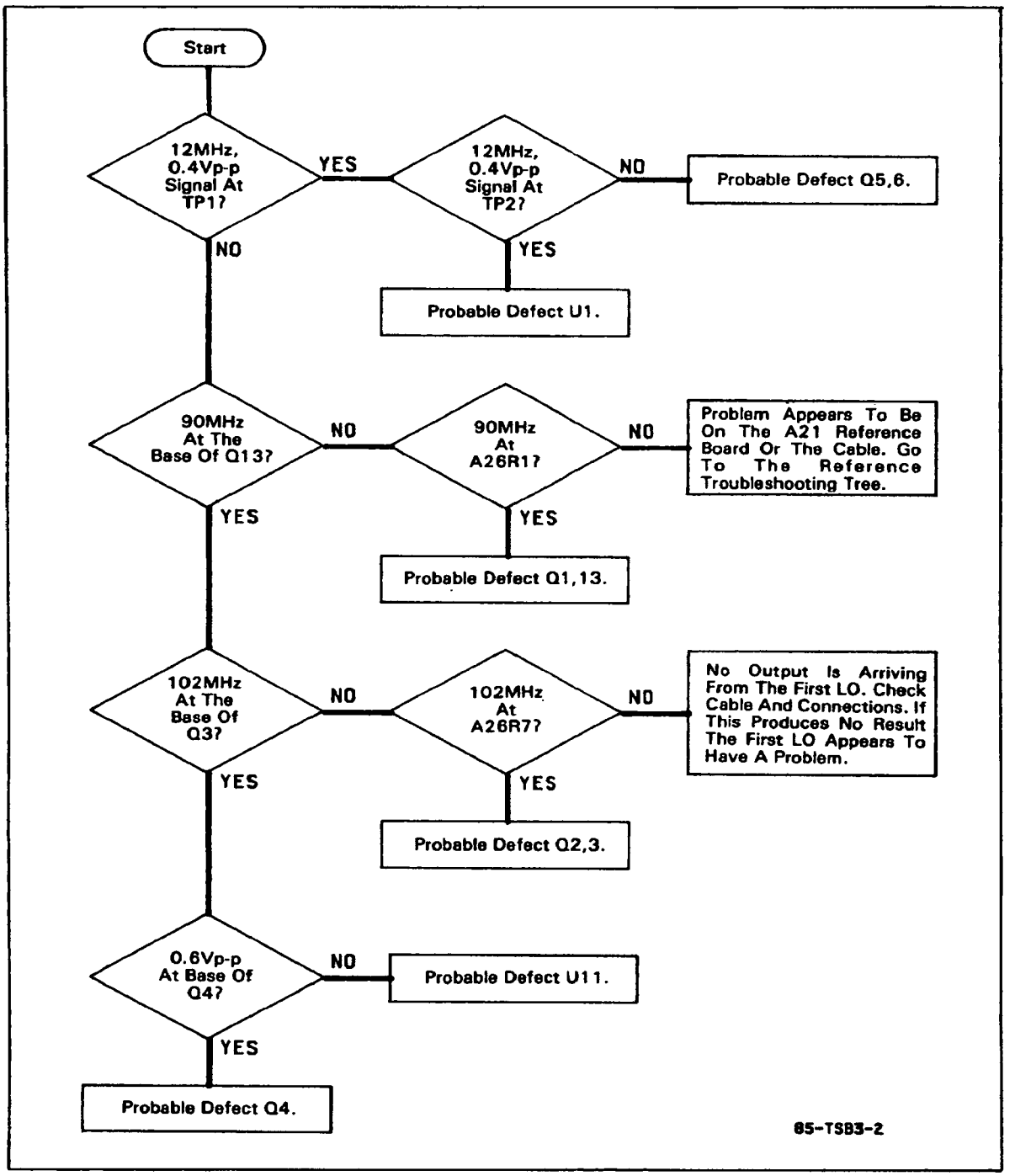


**A26 Mixer Circuitry Troubleshooting Tree.**

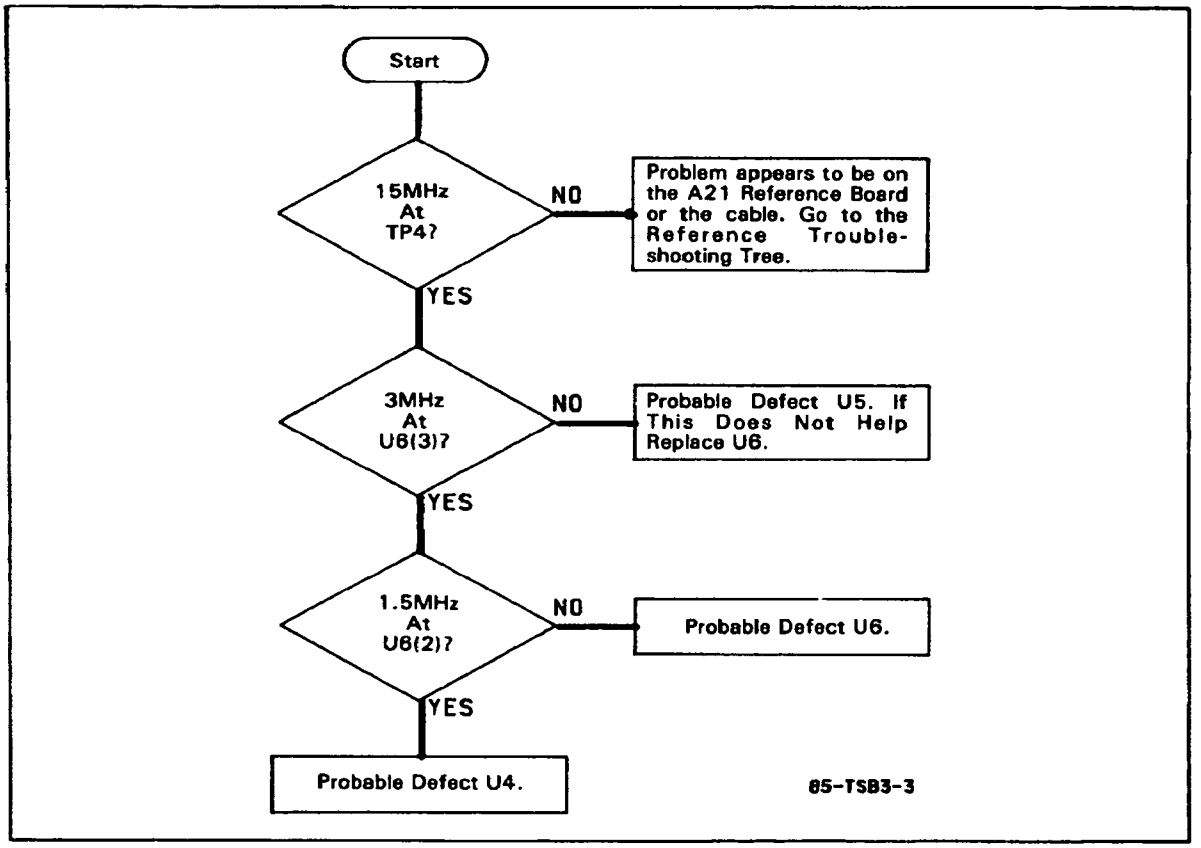


**A26 Reference Divider Troubleshooting Tree.**

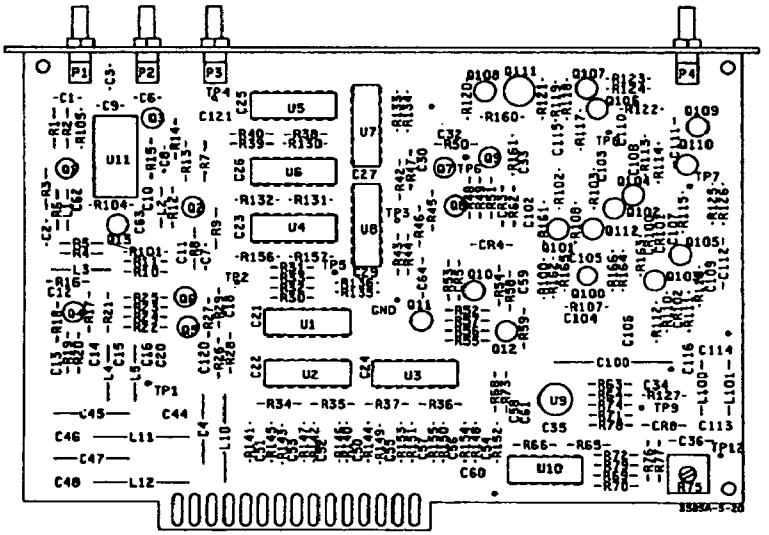

A26
03585-66526

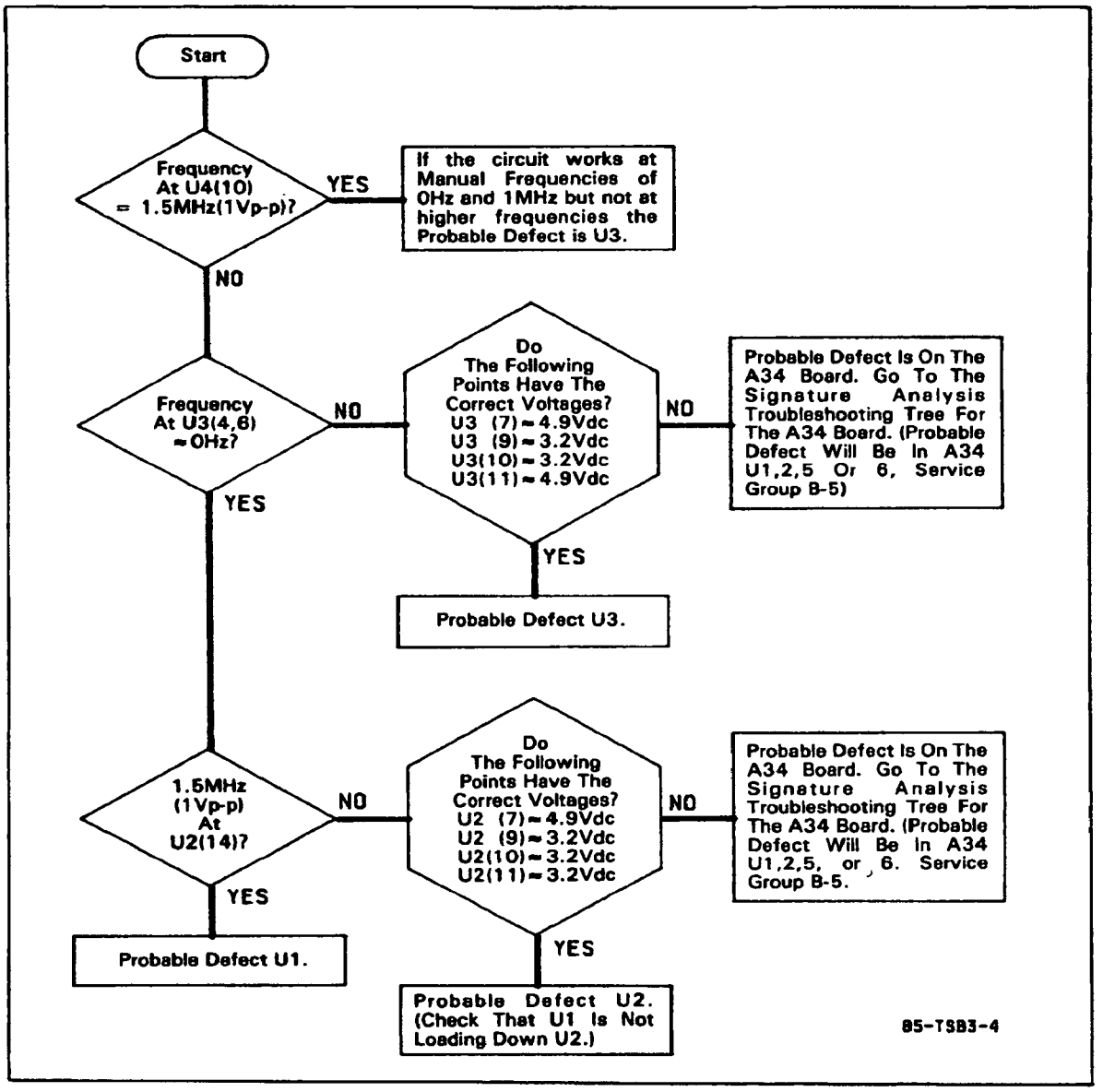


**A26 Divide-By-N Troubleshooting Tree.**

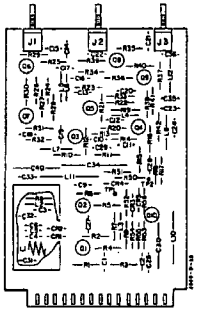

A23
03585-60523

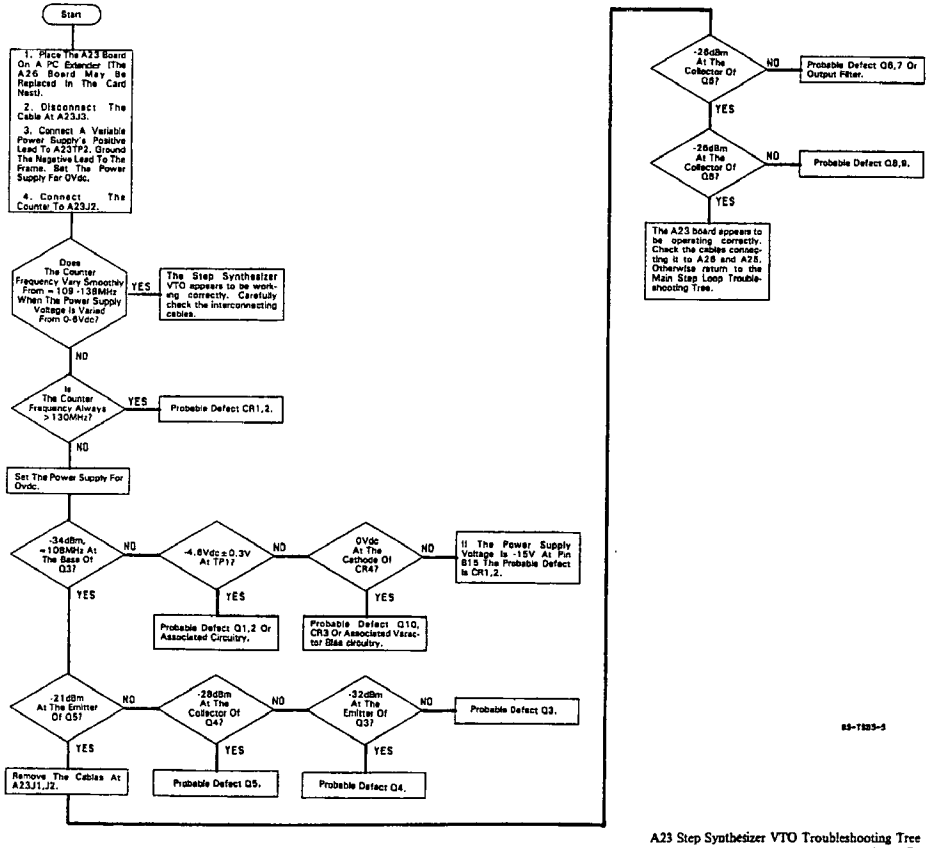


A23 Step Synthesizer VTO Troubleshooting Tree

# SERVICE GROUP B-4
# FRACTIONAL N SYNTHESIZER

## Board No. A31-33

## Part No. 03585-66531 thru 03585-66533

### INDEX:



### ADJUSTMENTS:

| Component | Adjusted Parameter | Paragraph Location |
|---|---|---|
| A31L3 | VCO Bias Voltage | 5-13 |
| A32R1 | API 1 | 5-13 |
| A32R2 | API 2 | 5-13 |

### TROUBLESHOOTING NOTES:

1. Throughout this Service Group you will notice questions such as:

Pulses at a 100kHz rate at U18(9)

To answer this question "yes" the oscilloscope waveform should resemble Figure 11-B-4-1, having ≥ 1Vp-p in amplitude.

2. When asked if a particular frequency is occuring at a given pin, use the counter with a 1:1 oscilloscope probe.

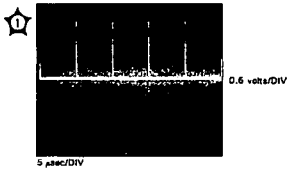


Figure 11-8-4-1

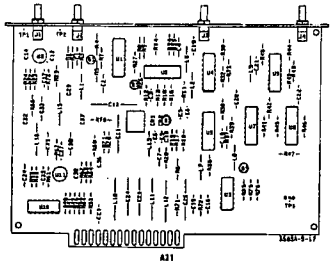

A31
03585-60531

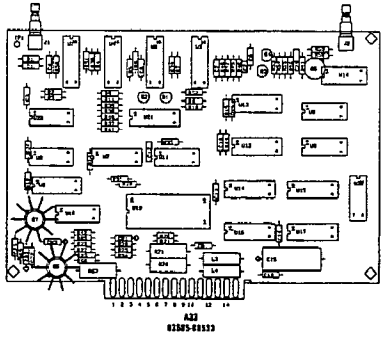

A32
03585-60533

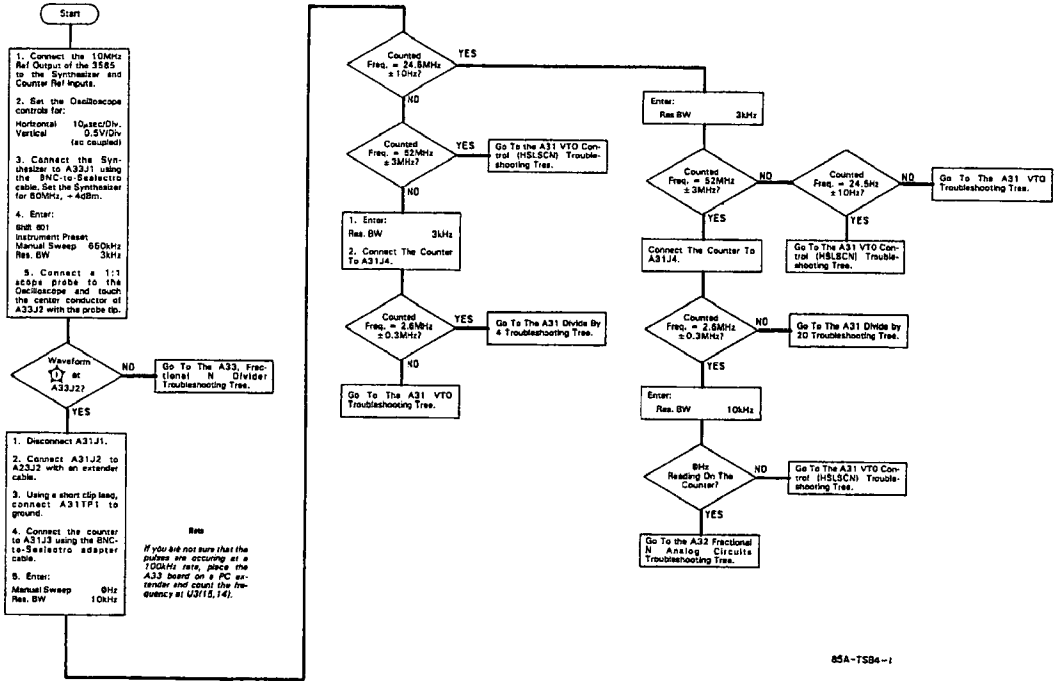


Fractional N Synthesizer (A31-33) Troubleshooting Tree

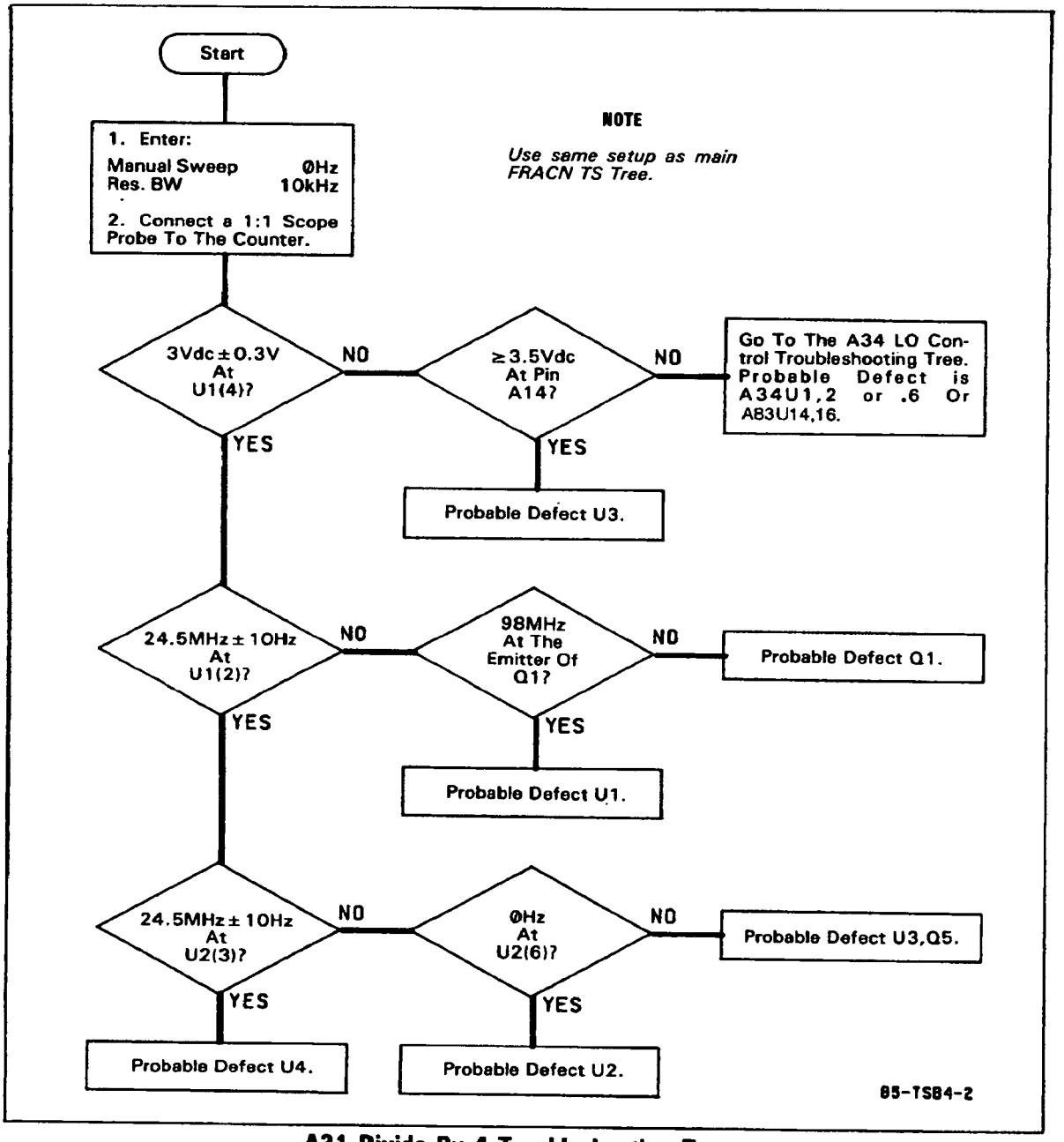


**A31 Divide By 4 Troubleshooting Tree.**

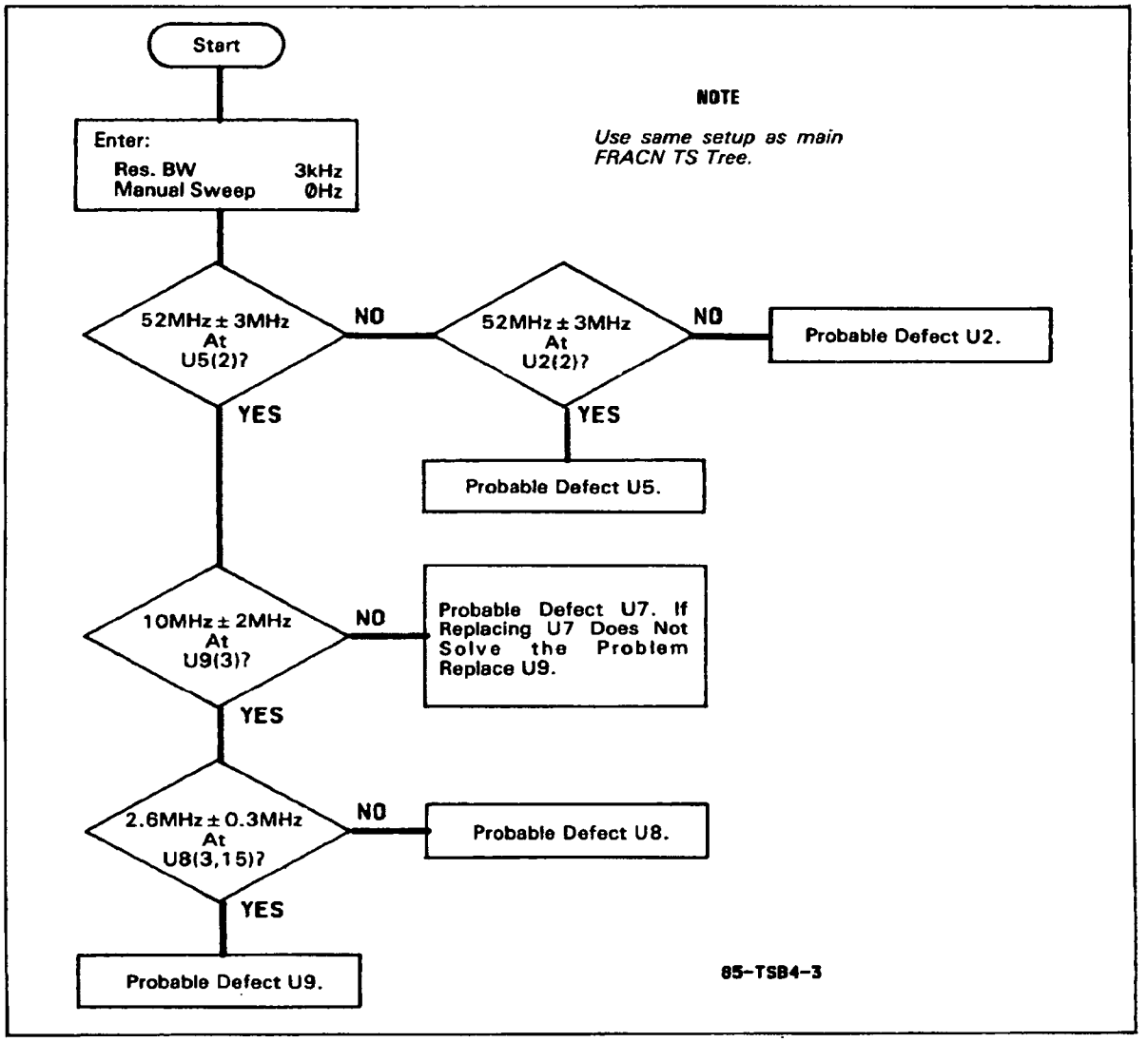


**A31 Divide By 20 Troubleshooting Tree.**

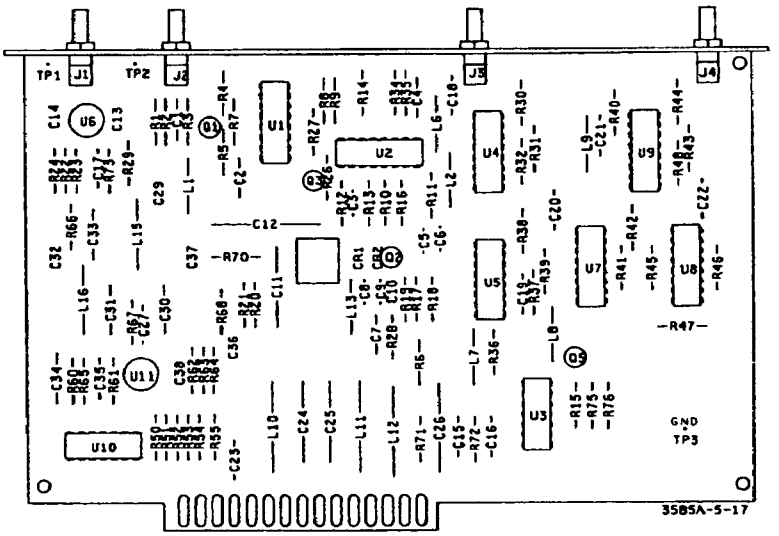


**A31**
**03585-66531**

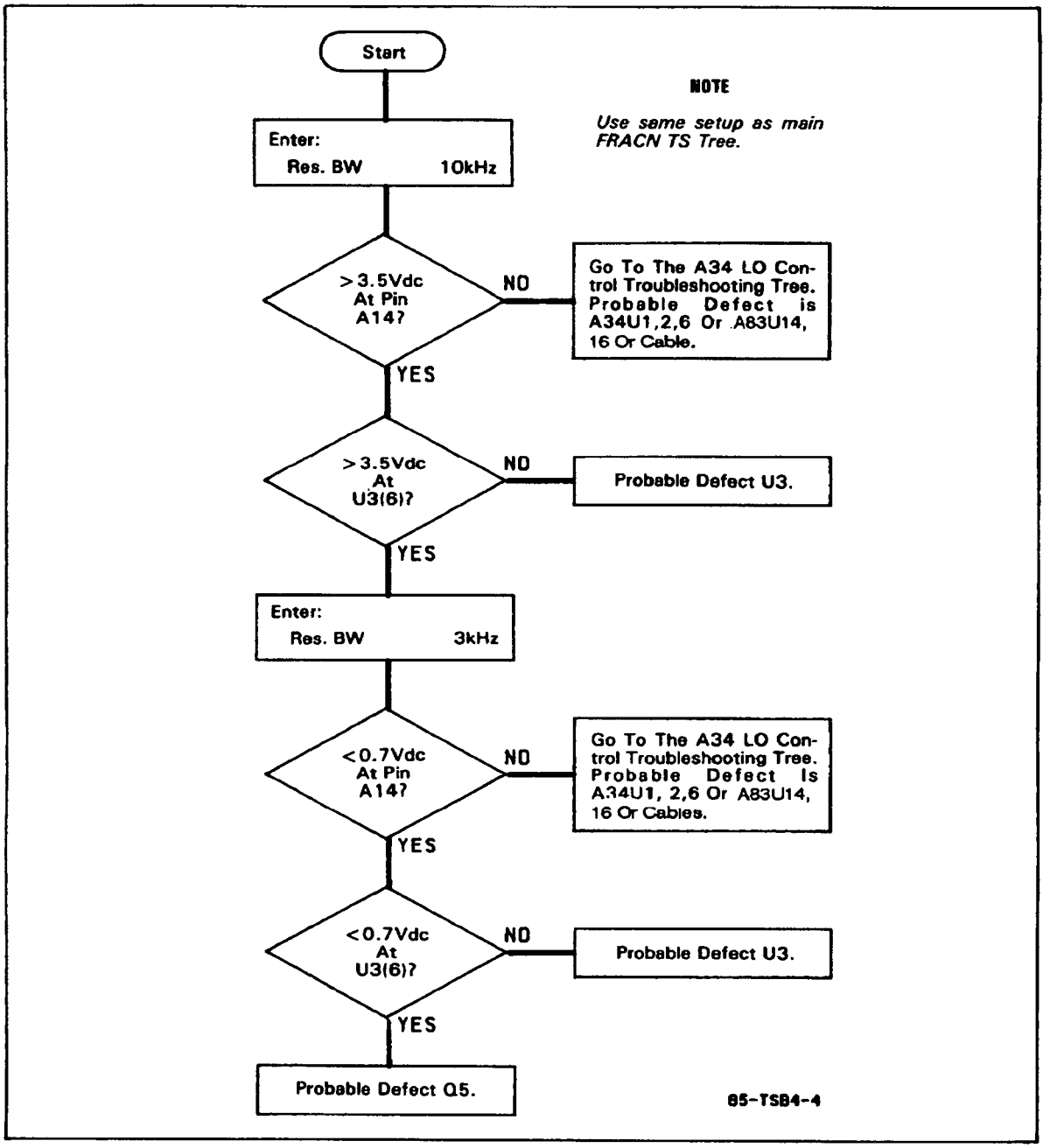


**A31 VTO Control (HSLSCN) Troubleshooting Tree**

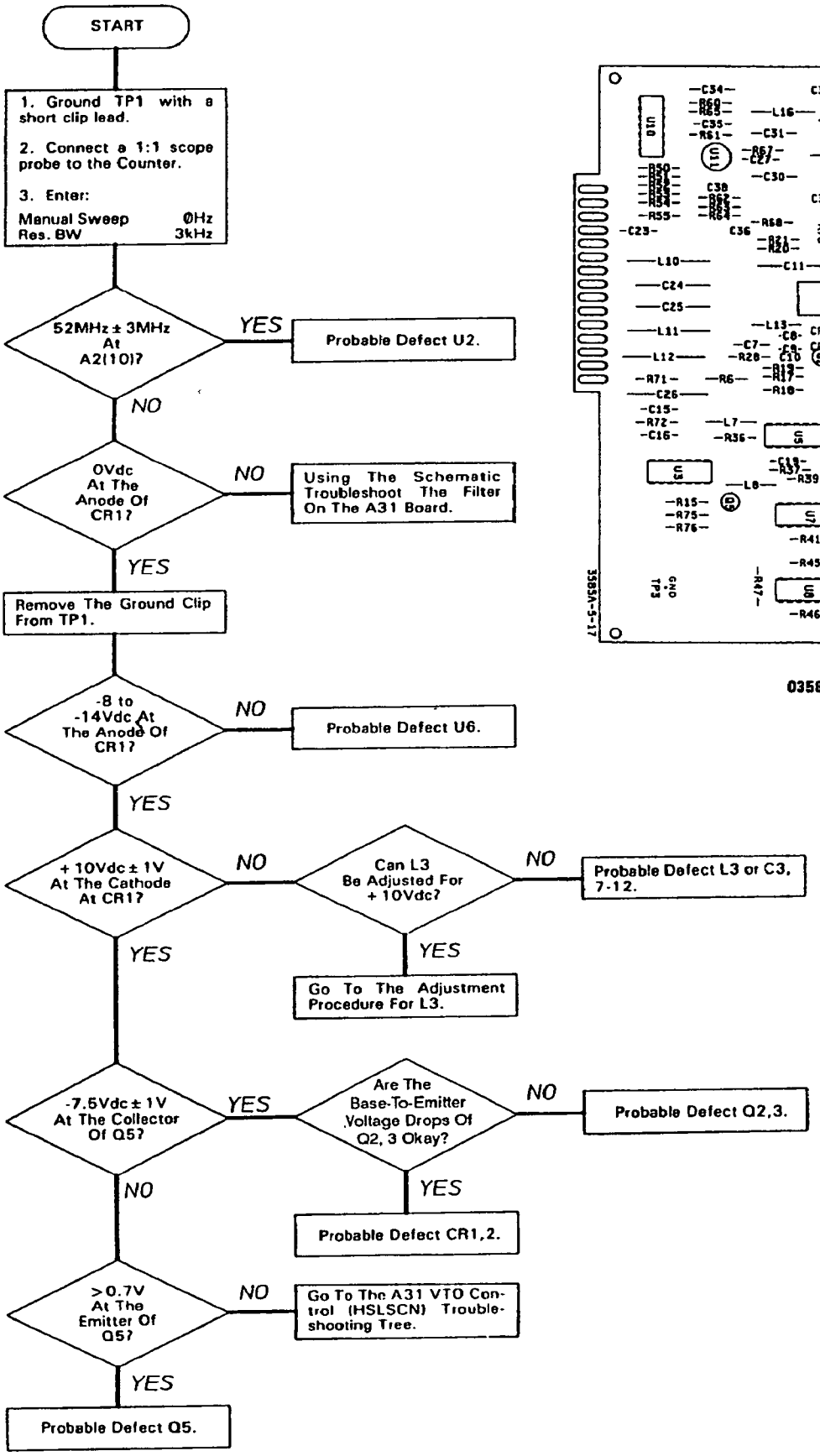


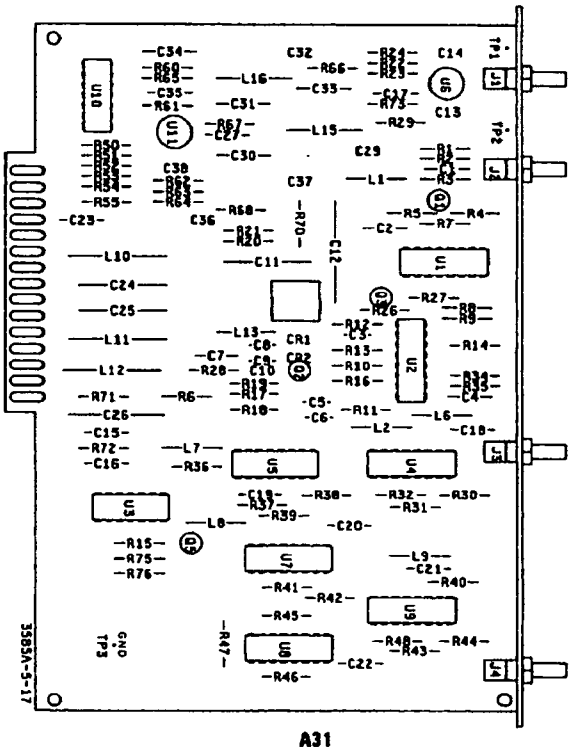

A31
03585-88531

A31 VTO Troubleshooting Tree

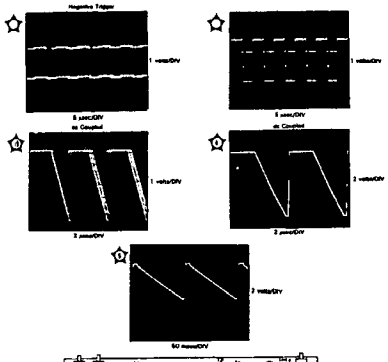
Negative Trigger
1 volts/DIV
5 usec/DIV
dc Coupled
1 volts/DIV
5 usec/DIV
dc Coupled
1 volts/DIV
2 usec/DIV
1 volts/DIV
2 usec/DIV
2 volts/DIV
50 msec/DIV

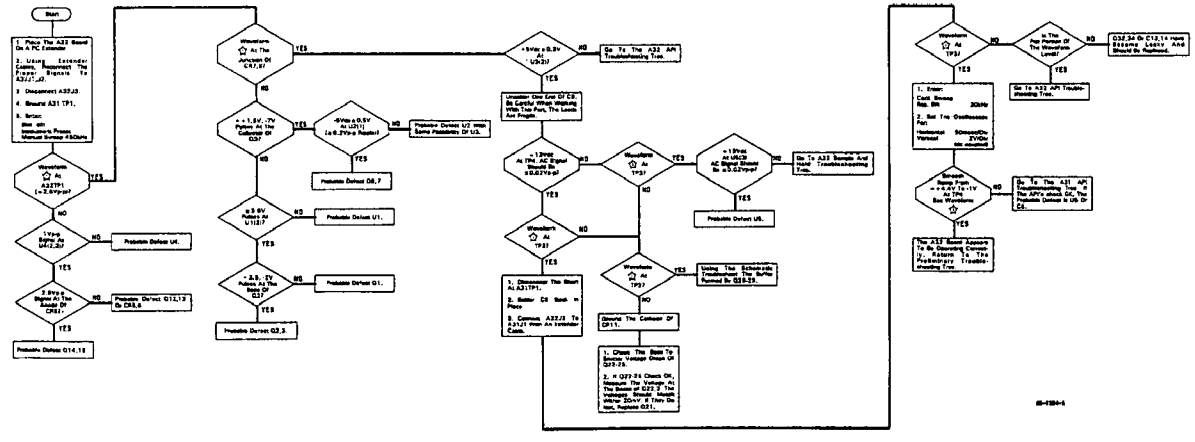
Start
1. Place The A32 Board On A PC Extender
2. Using Extender Cards, Reconnect The Power Signals To A32J1,J2
3. Disconnect A32J3.
4. Ground A31 TP1.
5. Scope:
Use an Instruments Press Manual Sweep 4 Sec/div
Waveform At A32TP1 (-2.5V p-p)?
YES
NO
1Vp-p Signal At U4/2,3?
NO
Probable Defect U4.
YES
2.5Vp-p Signal At The Anode Of CR33?
NO
Probable Defect Q12,13 Or CR3,4
YES
Probable Defect Q14,15
Waveform At The Junction Of C47,57
YES
NO
+ 1.5V, -7V Pulses At The Collector Of Q37
YES
-5Vdc ± 0.5V At U2/11 (± 0.2Vp-p Ripple)?
NO
Probable Defect U2 Pins Some Possibility Of U3.
YES
Probable Defect Q6,7
NO
± 3.5V Pulses At U1/2,7
NO
Probable Defect U1.
YES
- 2.5, -7V Pulses At The Base Of Q37
NO
Probable Defect Q1.
YES
Probable Defect Q2,3.
+5Vdc ± 0.5V At U3-2U
NO
Go To The A32 API Troubleshooting Tree.
YES
Unsolder One End Of C8. Be Careful When Wiping With Tab Pad, The Leads Are Fragile.
+ 12Vdc At TP4. AC Signal Should Be ± 0.62Vp-p?
NO
Waveform At TP31
YES
+ 12Vdc at U5/20 AC Ripple Should Be ± 0.22Vp-p?
NO
Go To A32 Sample And Hold Troubleshooting Tree.
YES
Probable Defect U5.
NO
Waveform At TP31
YES
1. Disconnect The Short At A31TP1.
2. Solder C8 Back In Place
3. Connect A32J3 To A31J1 From An Extender Cards.
NO
Waveform At TP37
YES
Using The Schematic Troubleshoot The Buffer Formed By Q35-39.
NO
Ground The Collector Of CR11.
1. Check The Base To Emitter Voltage Drops Of Q33-39.
2. If Q37-39 Check Ok, Measure The Voltage At The Base of Q37. If The Base Voltage Is Below 20mV & They Do Not, Replace Q31.
Waveform At TP31
NO
Is The Peak Peaker Of The Waveform Level?
NO
Q32,34 Or C12,14 Have Shorts Leaks And Should Be Replaced.
YES
Go To A32 API Troubleshooting Tree.
YES
1. Erase:
Cntrl Scope
Ref. Bit
2. Set The Oscilloscope Part:
Horizontal 30msec/Div
Vertical 2V/Div
dc coupled
Sample Ramp Peak = + 0.5V To -1V At TP4 See Waveforms
NO
Go To The A31 API Troubleshooting Tree. If The API's check OK, The Problem Lies In Q5 Or C4.
YES
The A32 Board Appears To Be Operating Properly. Return To Preliminary Troubleshooting Tree.
A32

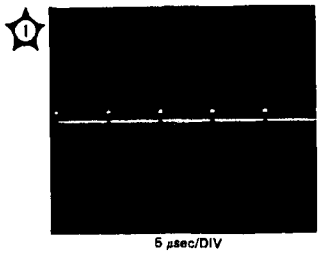


Collector of Q39

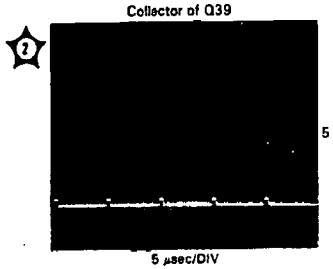


Collector of Q38

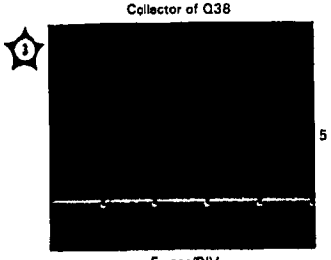


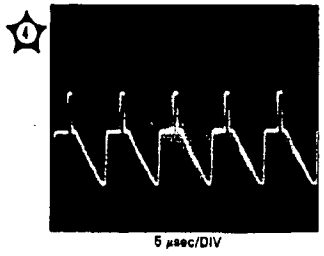


Collector Q37

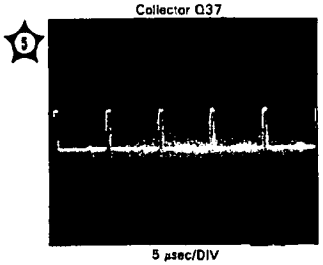


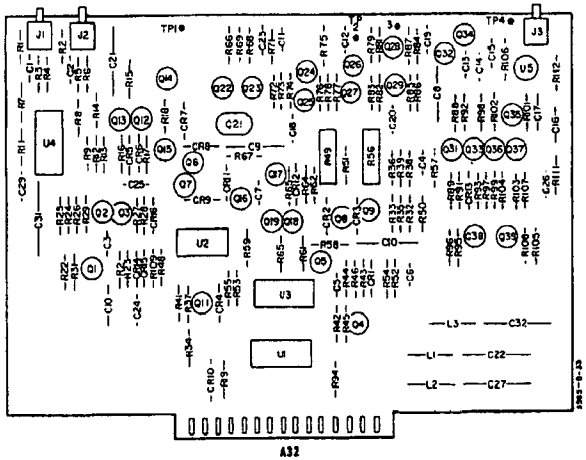


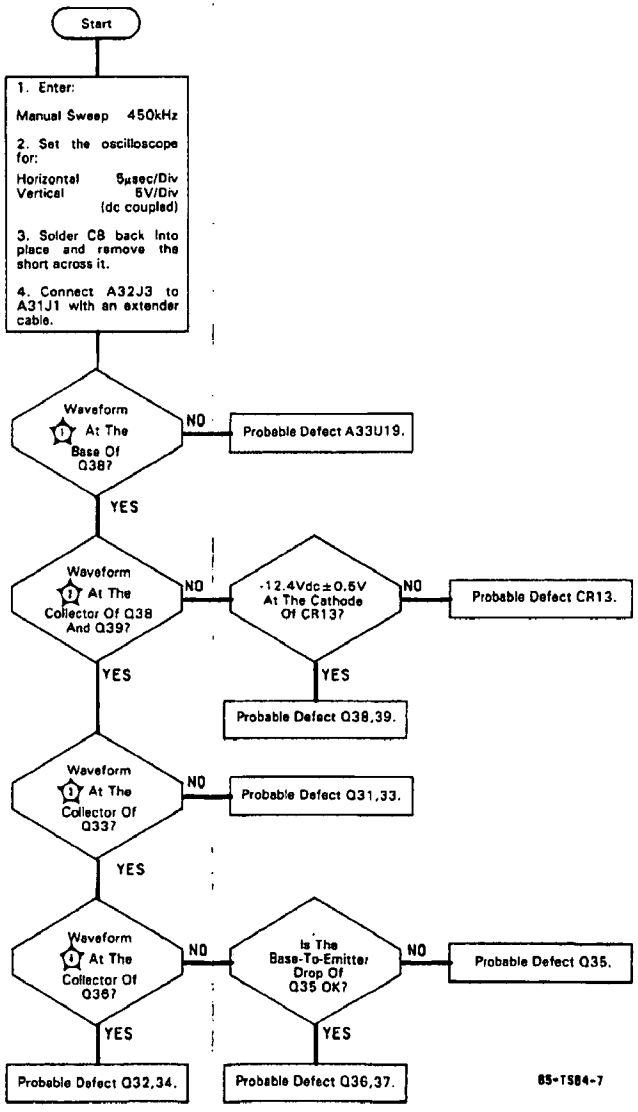


A32 Sample and Hold Troubleshooting Tree
11-185/11-186

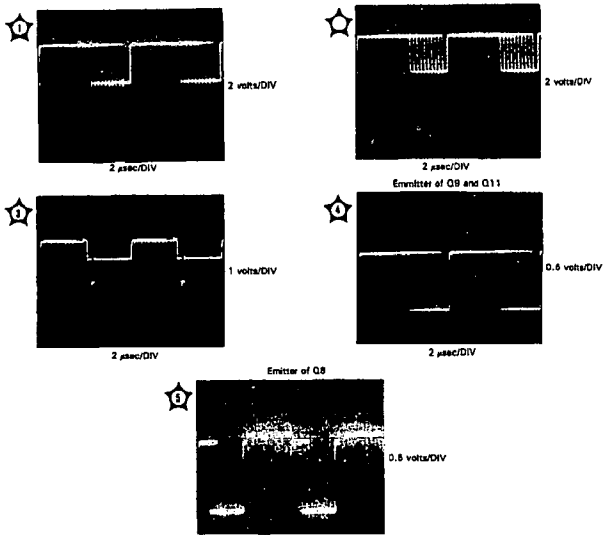


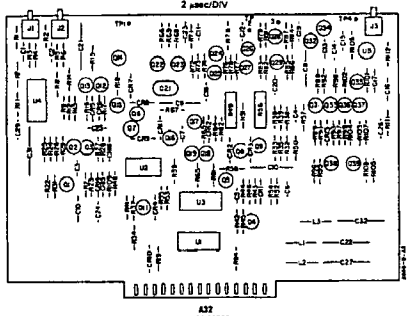


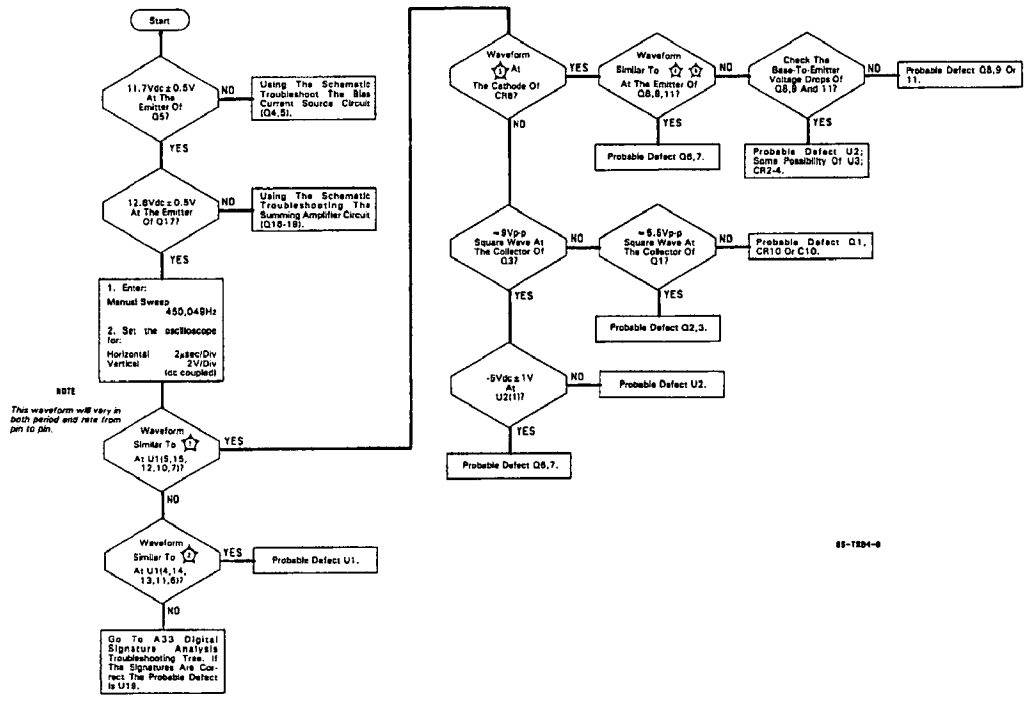


A32 API Troubleshooting Tree
11-187/11-188

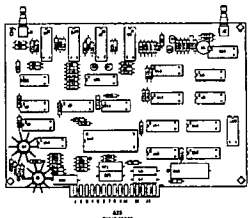

A33
02648-66533

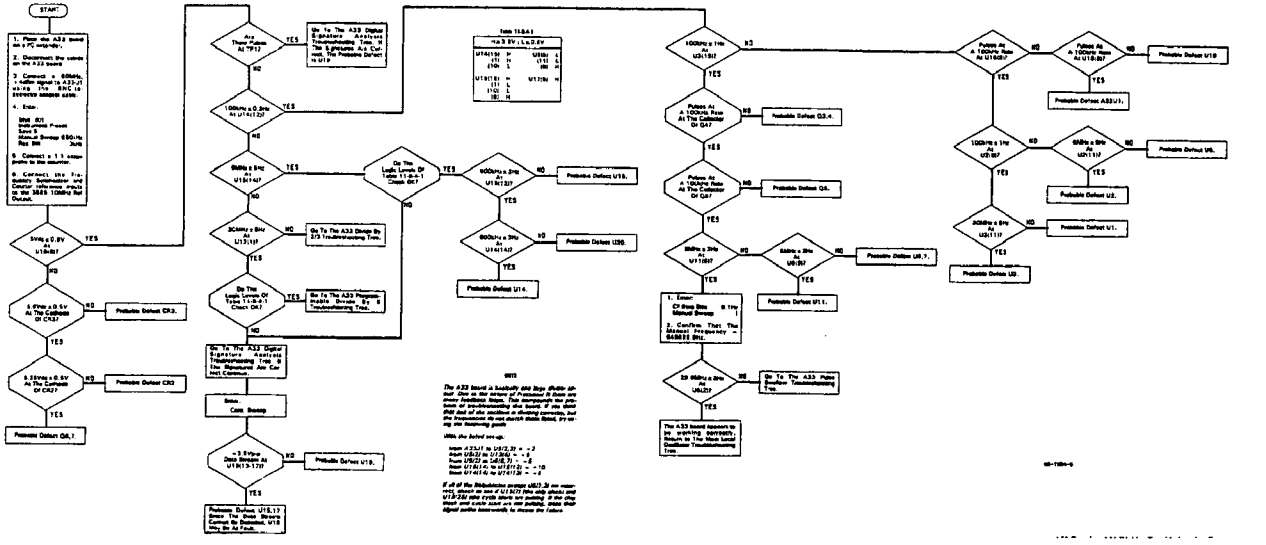

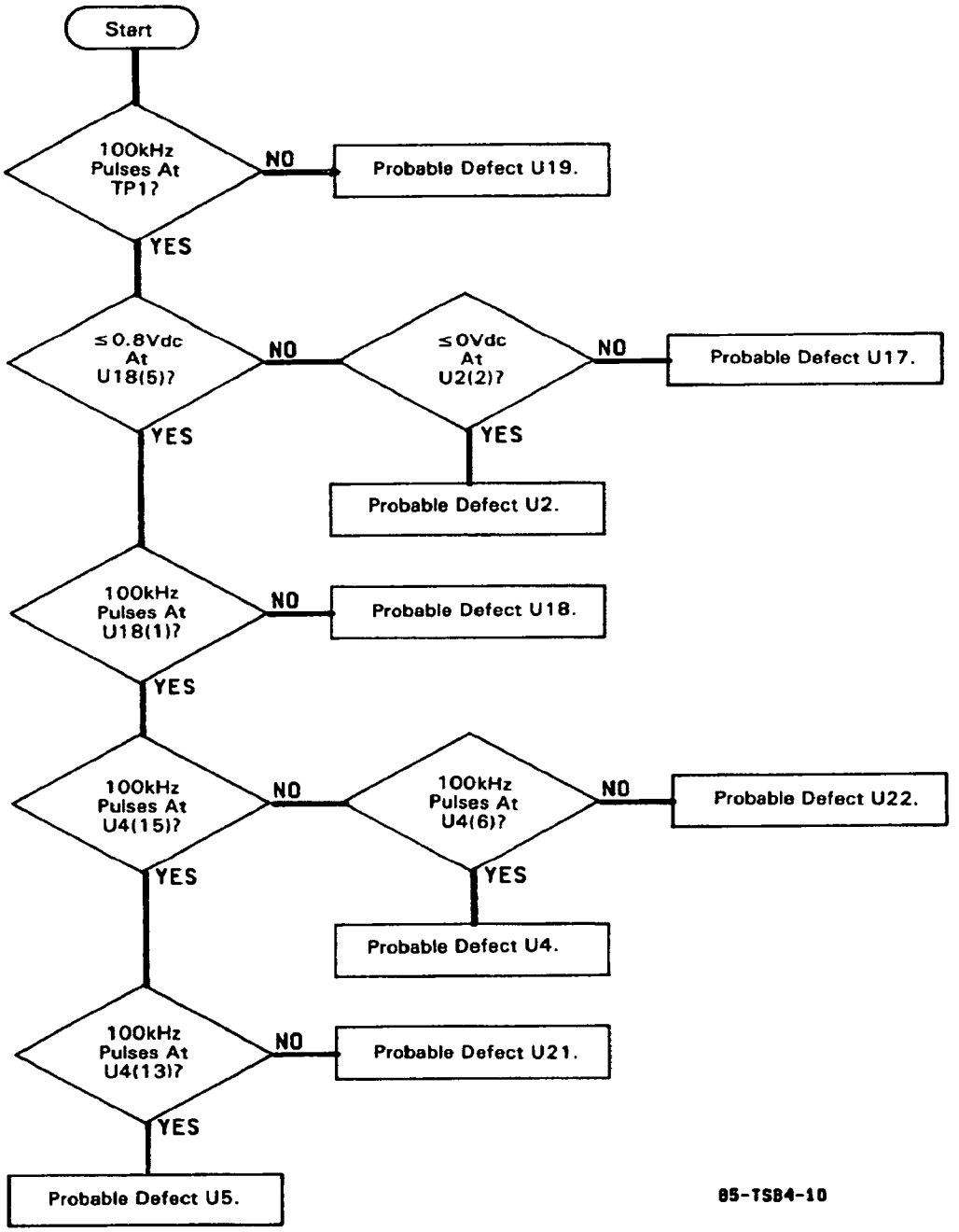


**NOTE**

*Careful observation will show that there are two pulses occuring 0.6µsec apart. Use an oscilloscope to check the 100kHz pulses.*

A33 Pulse Swallow Troubleshooting Tree

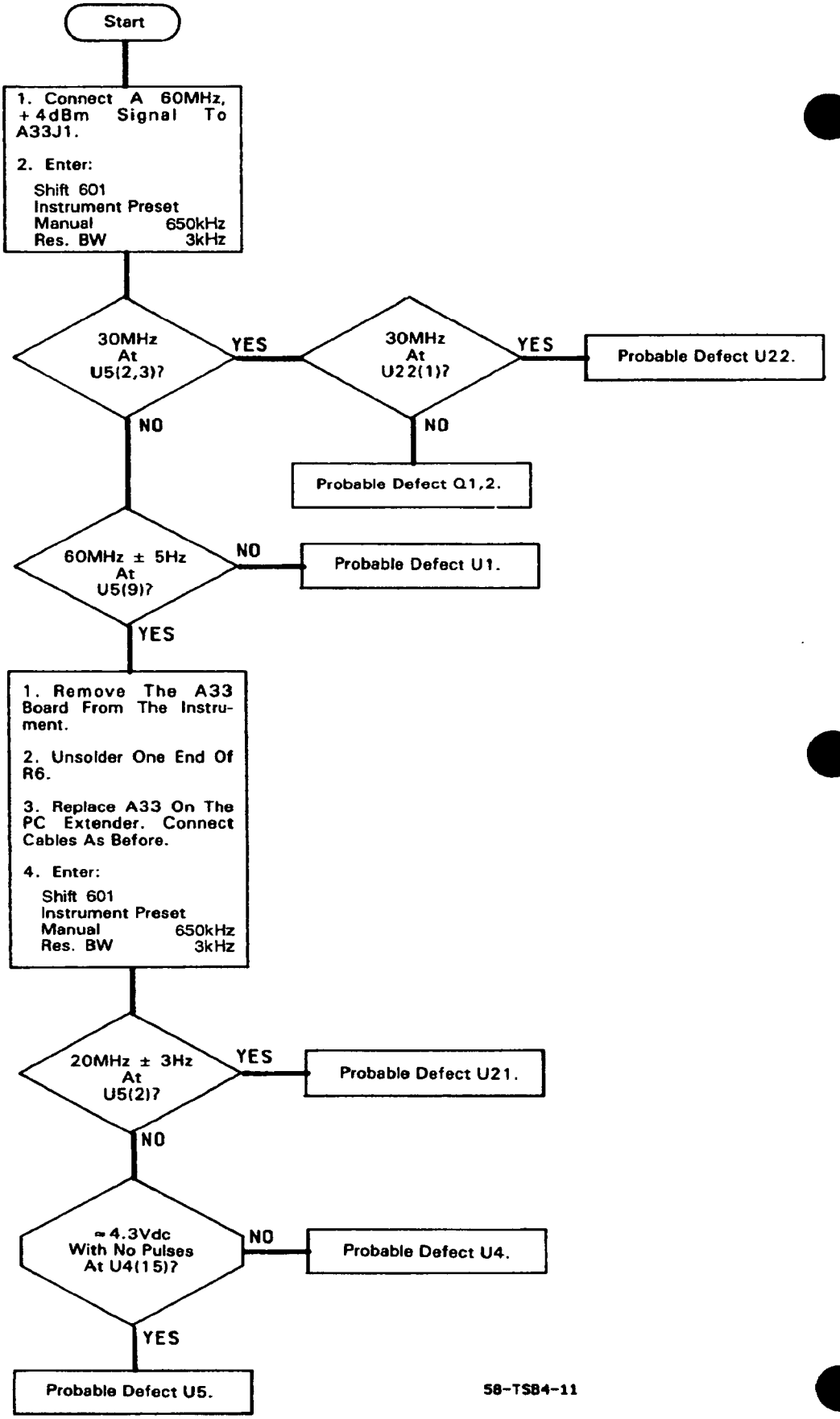


A33 Divide by 2/3 Troubleshooting Tree

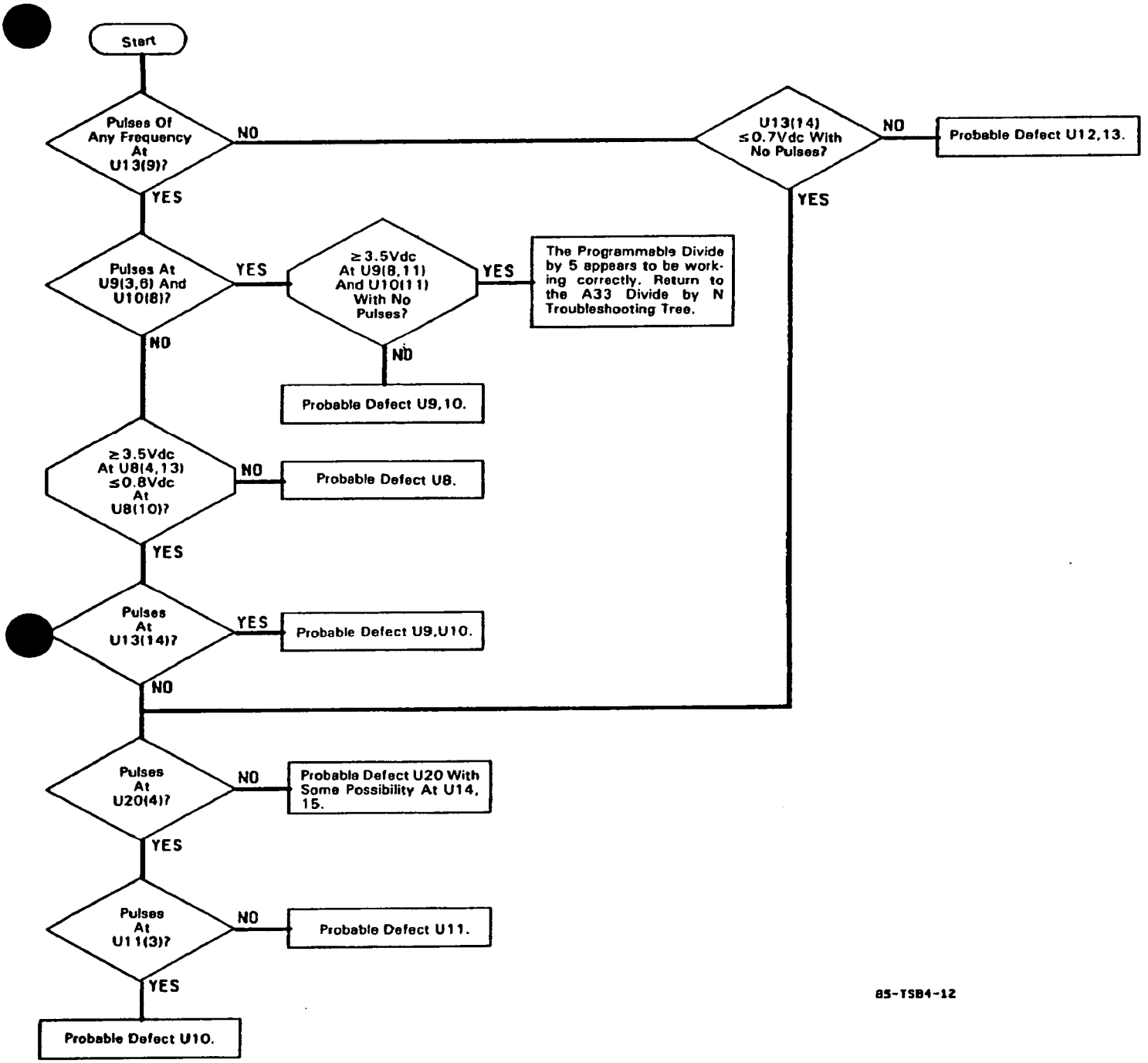


A33 Programmable Divide by 5 Troubleshoting Tree
11-193/11-194

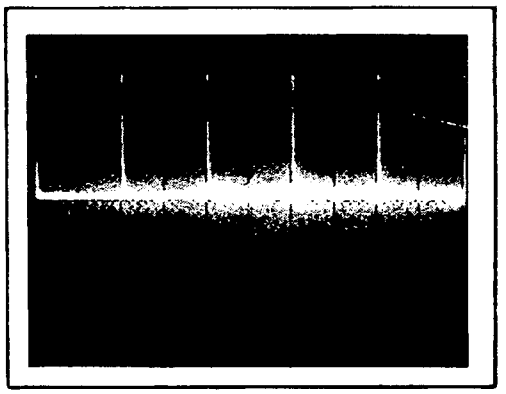

**Figure 11-B-4-2. Example Pulse Waveform**

### A33 Board Signature Analysis Tests.

Equipment Required: Signature Analyzer.

a. Turn the instrument off.

b. On the A83 board (tabs = Orange/Gray), set the DIP switch (SW101) positions 1 and 6 "closed". All others should be "open".

c. Connect the Signature Analyzer as follows:

START and STOP---------- A82 TP4
CLOCK---------- A82 U9 (8)
GND---------- A82 TP1

d. Set the Signature Analyzer controls as follows:

START ---------- (in)
STOP---------- (out)
CLOCK---------- (out)
HOLD---------- off (out)
SELF TEST---------- off (out)

e. Turn the 3585 (and Signature Analyzer) on.

f. At this point, the CRT screen should be blank, the front-panel LED indicators should be on and the four LEDs on A83 should be on.

To verify that your test setup is correct and the test routine is running properly, touch the Signature Analysis test probe to A33, pin A11. The signature should be "1USC".

g. Check for the following signatures at A33, pins B3 thru B8:

| A33 Pin | Signature |
|---|---|
| B3 | 0USA |
| B4 | H267 |
| B5 | 42P0 |
| B6 | CC2P |
| B7 | 6359 |
| B8 | AHAF |

1. If the signatures are correct, no further Signature Analysis Test are required. Disconnect the Signature Analyzer, set the A83 switches to the "OPEN" position and correct the defect indicated on the A33 Troubleshooting Tree.

2. If the signatures are incorrect, the trouble may be on the LO Control Board (A34, Service Group B-5). Leave the Signature Analyzer connected and go to the LO Control Signature Analysis tree.

# SERVICE GROUP B-5
# LO CONTROL

## Board No. A34

## Part Number 03585-66534

### INDEX:



### ADJUSTMENTS:

| Component | Adjusted Parameter | Paragraph Location |
|---|---|---|
| A34R32 | 5V Power Supply | 5-13 |

### TROUBLESHOOTING NOTES:

1. Many of the questions in this Troubleshooting Tree refer to pulses. These pulses are quite narrow (10μsec) but occur at a slow rate (≈220msec). Use "normal" triggering on your oscilloscope in order to see these pulses. In most cases the presence of the pulse is the important quantity, rather than the pulse polarity.

### A34 Board Signature Analysis Tests.

Equipment Required: Signature Analyzer

a. Turn the instrument off.

b. On the A83 board (tabs = Orange/Gray), set the DIP switch (SW101) positions 1 and 6 "closed". All others should be "open".

c. Connect the Signature Analyzer as follows:

START and STOP----------A82 TP4
CLOCK----------A82 U9 (8)
GND----------A82 TP1

d. Set the Signature Analyzer controls as follows:

START ---------- ⟍ (in)
STOP ---------- ∫ (out)
CLOCK ---------- ∫ (out)
HOLD ---------- off (out)
SELF TEST ---------- off (out)

e. Turn the 3585 (and Signature Analyzer) on.

f. At this point, the CRT screen should be blank, the front-panel LED indicators should be on and the four LEDs on A83 should be on.

To verify that your test setup is correct and the test routine is running properly, touch the Signature Analysis test probe to A34TP5.

The signature should be "1USC".

g. Check for the following signatures:

| A34J1 Pin | Signature |
|---|---|
| A15 | AHAF |
| A16 | CC2P |
| B12 | 127H |
| B13 | 1UA8 |
| B14 | U357 |
| B15 | 6359 |
| B16 | 0U5A |

1. If signatures are correct, go to Step h.

2. If signatures are incorrect, trouble is on I/O board (A83, Service Group 11-C) or lines are being loading by the A34 board.

h. Check the following signatures:

| Location | Signature |
|---|---|
| U2( 1) | 2HU8 |
| U2( 4) | 0F31 |
| U2(10) | HP07 |
| U2(13) | 42P0 |
| U3( 1) | H267 |

1. If the signatures are correct, go to Step j.

2. If the signatures are incorrect, go to Step i.

i. Check the following signatures:

| U1 Pin | Signature |
|---|---|
| 2 | 8A99 |
| 5 | 3UFA |
| 7 | 397A |
| 10 | 83A1 |
| 12 | UUAP |

1. If the signatures are correct, replace U2 unless the signature at U3(1) was in error, then replace U3.

2. If the signatures are incorrect, replace U1.

j. Check the signatures for U4 if you entered these tests from the A34 Sweep Timing Troubleshooting Tree or the A28 board. If you entered these tests from the A26 board check the signatures for U5 and U6.

| U4 Pin | Signature |
|---|---|
| 2 | 5U26 |
| 3 | 407H |
| 6 | 6CP5 |
| 7 | 74CP |
| 10 | P002 |
| 15 | H222 |

1. If the signatures are correct, the Probable Defect is U8.

2. If the signatures are incorrect, replace U4.

| U5 Pin | Signature |
|---|---|
| 2 | P0P2 |
| 7 | FA25 |
| 10 | 3H84 |
| 15 | 3831 |

| U6 Pin | Signature |
|---|---|
| 2 | 47H6 |
| 5 | 7UHP |
| 7 | H7PF |
| 10 | P95C |
| 15 | C5P9 |

3. If the signatures are correct, the Probable Defect is A26U2,3.

4. If the signatures are incorrect, replace U5 or U6 respectively.

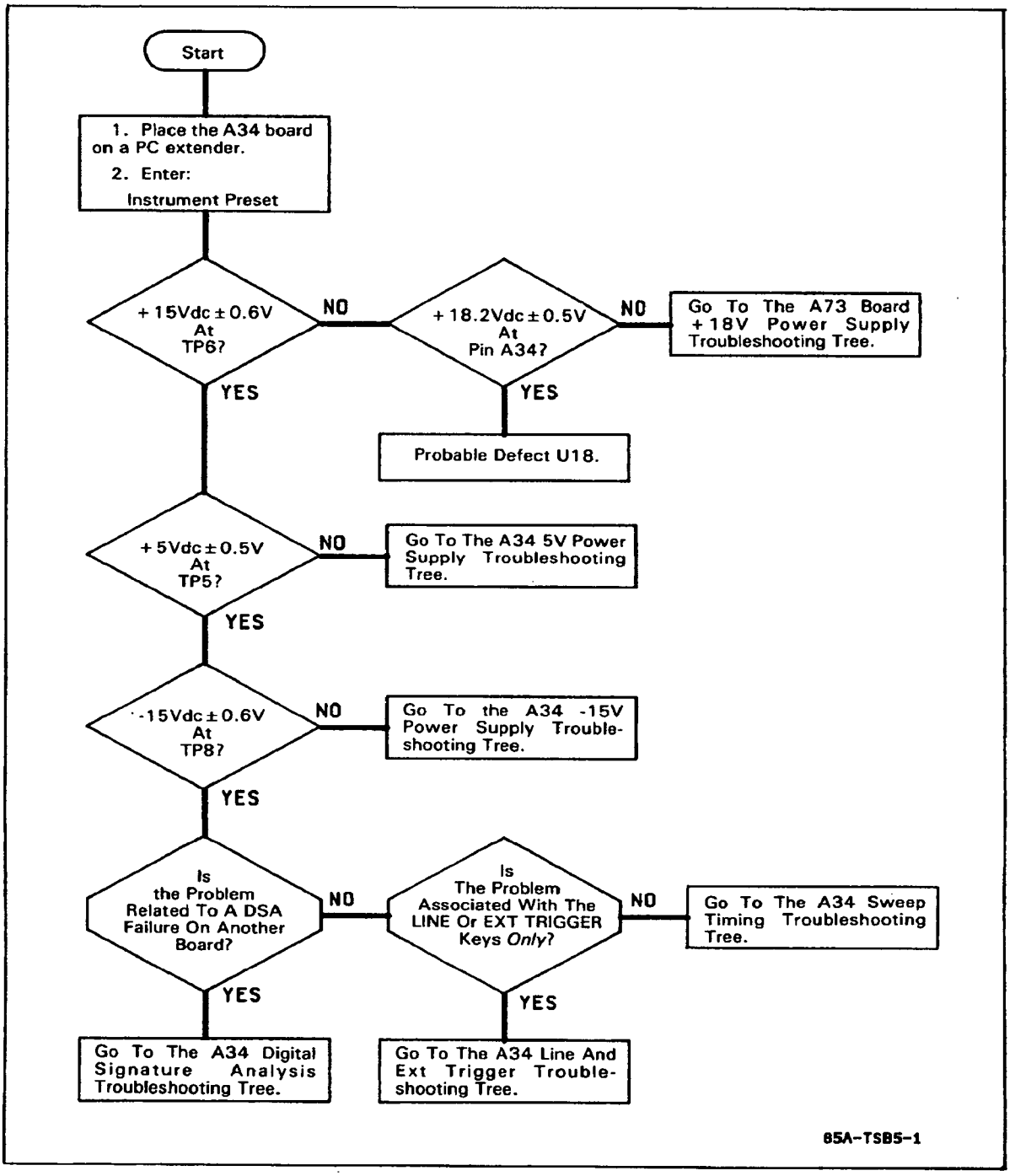


**LO Control (A34) Troubleshooting Tree.**

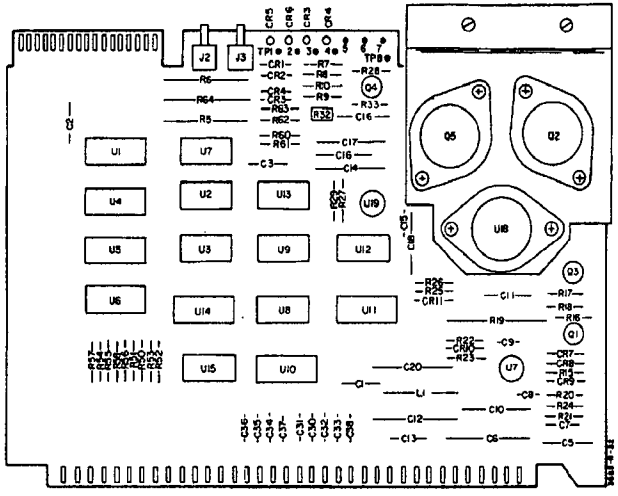


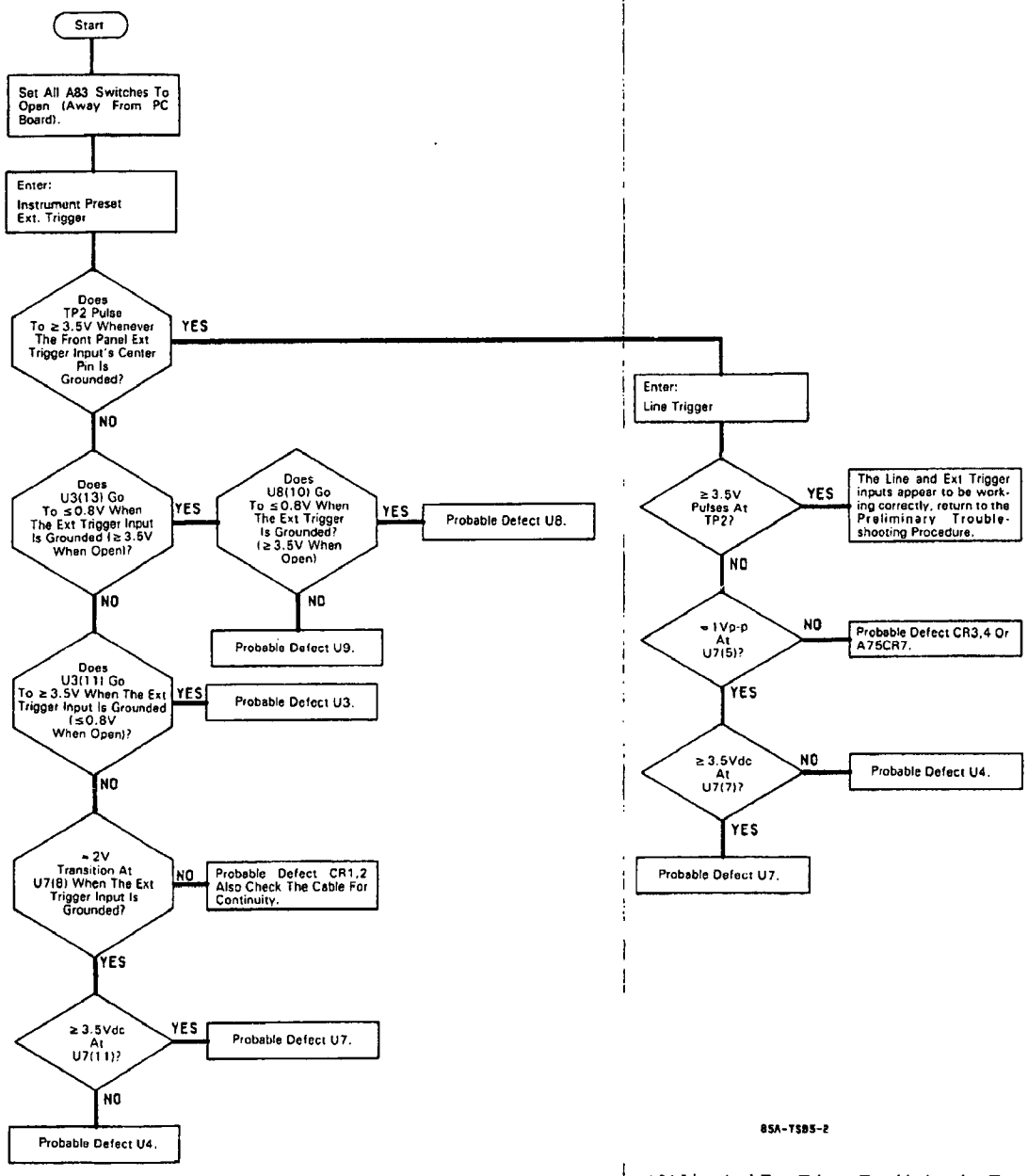


85A-TSB5-2

A34 Line And Ext. Trigger Troubleshooting Tree
11-201/11-202

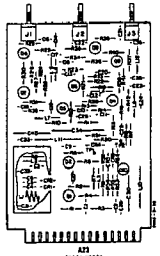


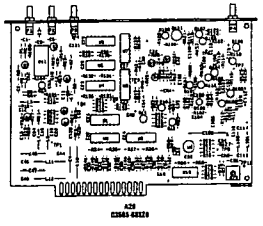


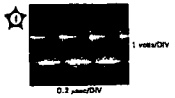


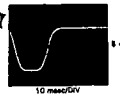



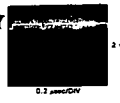


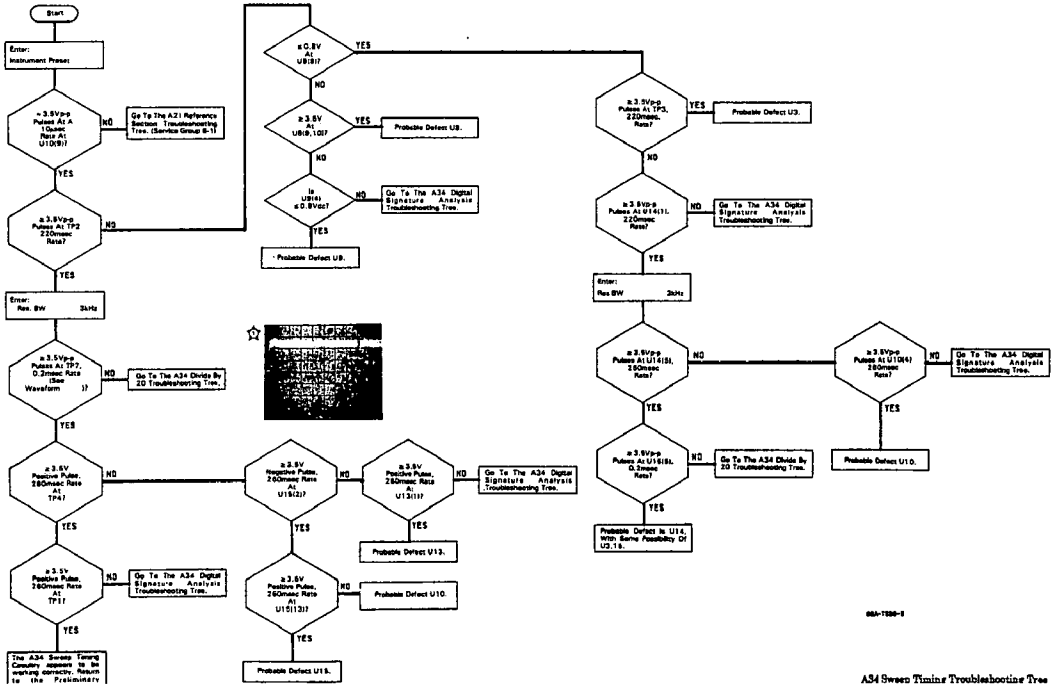


A34 Sweep Timing Troubleshooting Tree

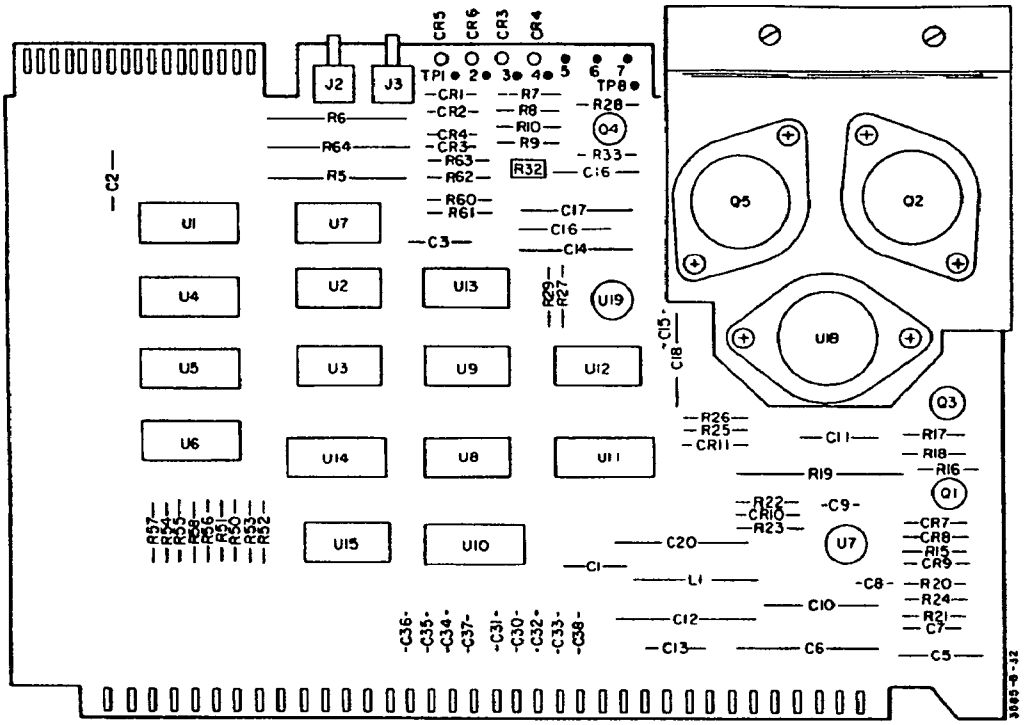


A34
03585-66534

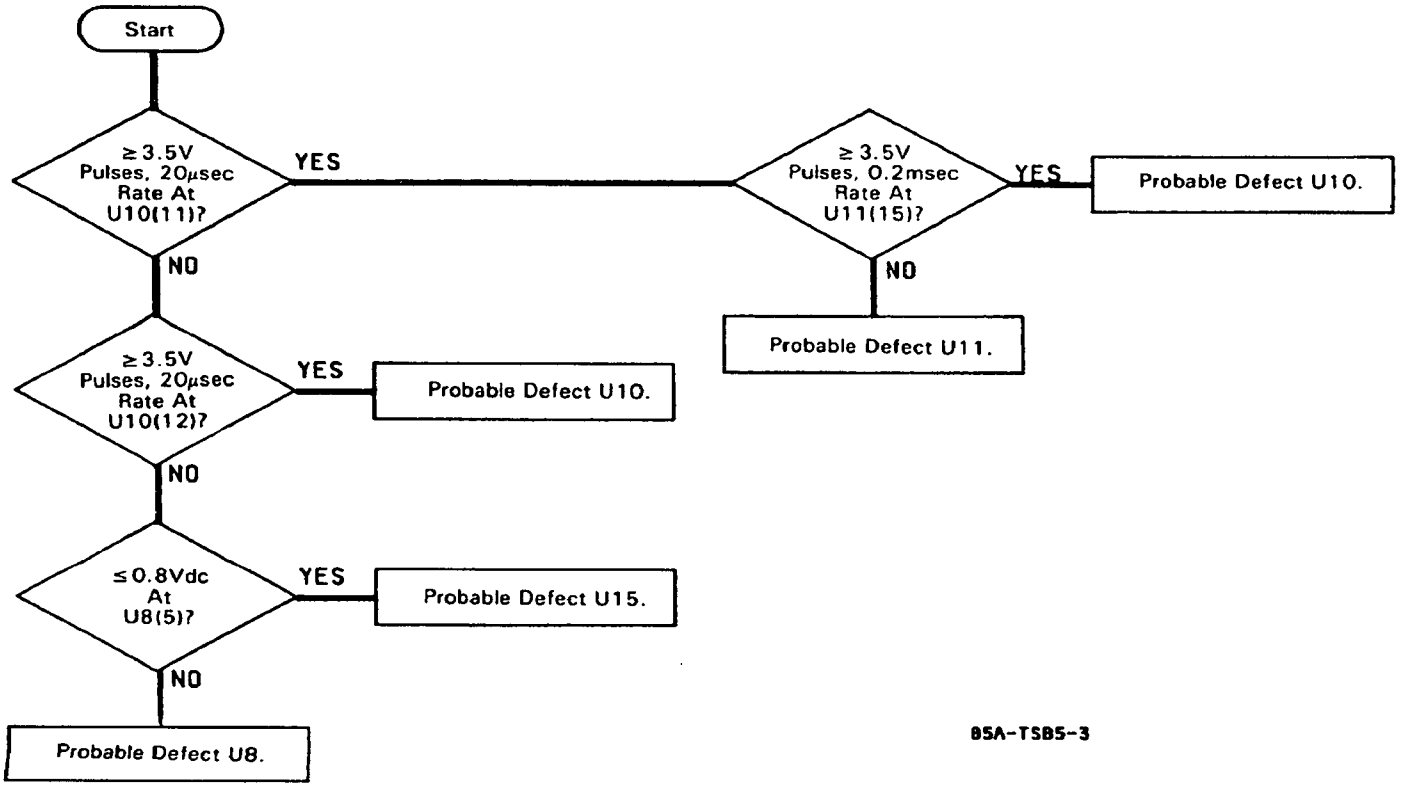


A34 Divide By 20 Troubleshooting Tree

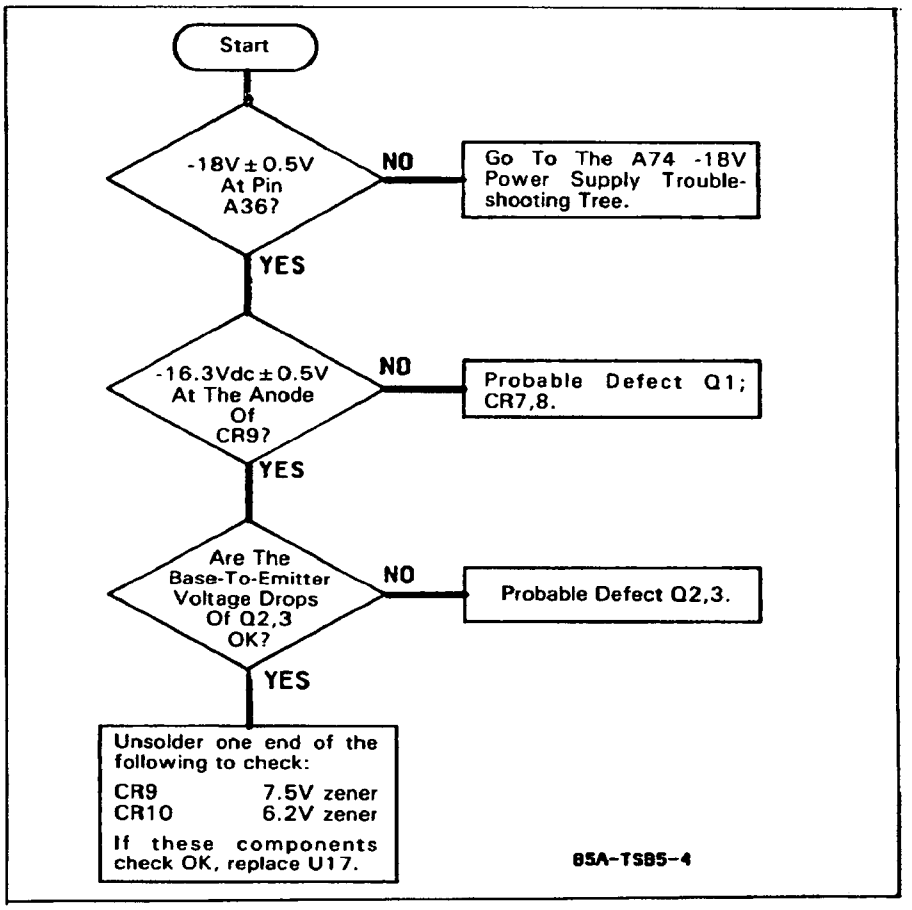


**A34 -15V Power Supply Troubleshooting Tree.**

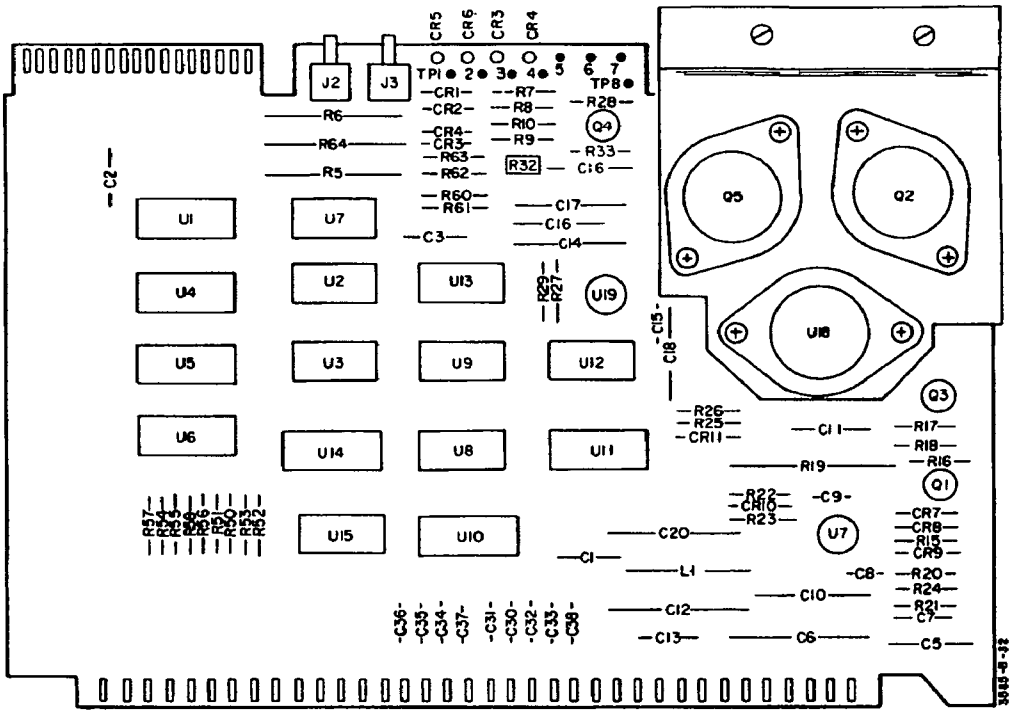


**A34**
**03585-66534**

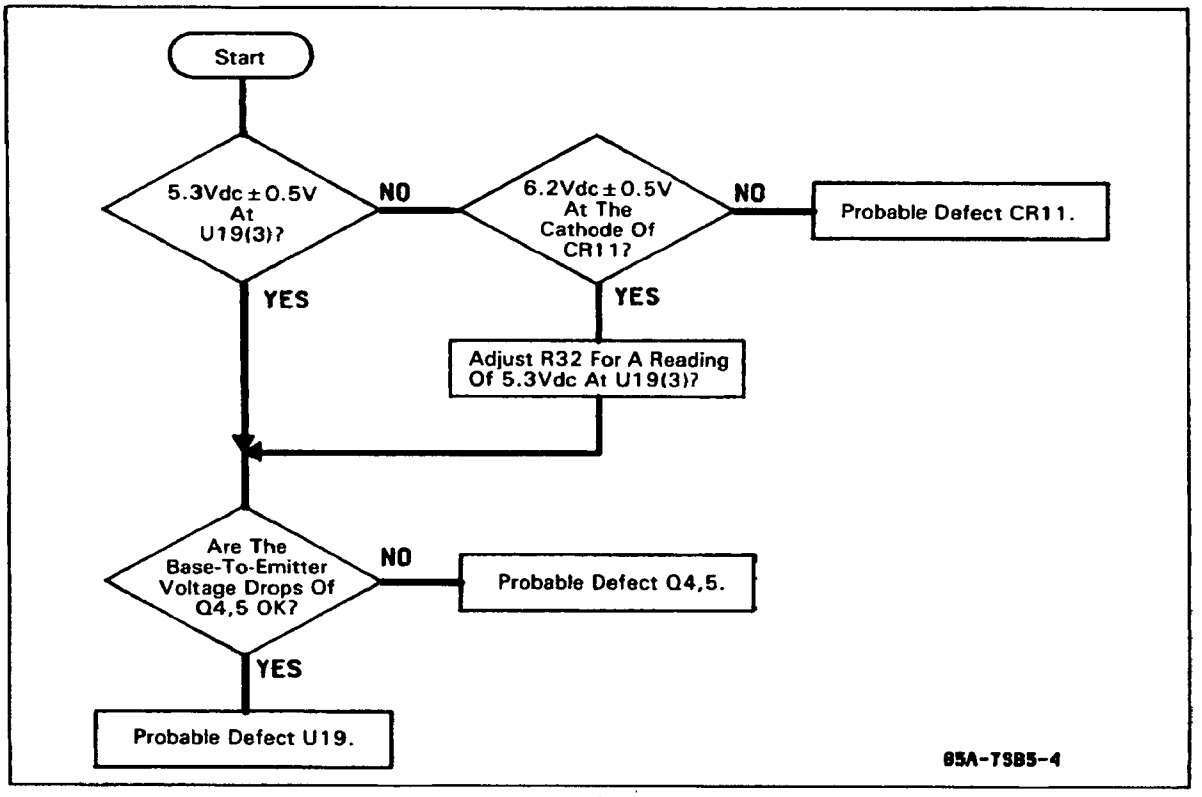


**A34 5V Power Supply Troubleshooting Tree.**

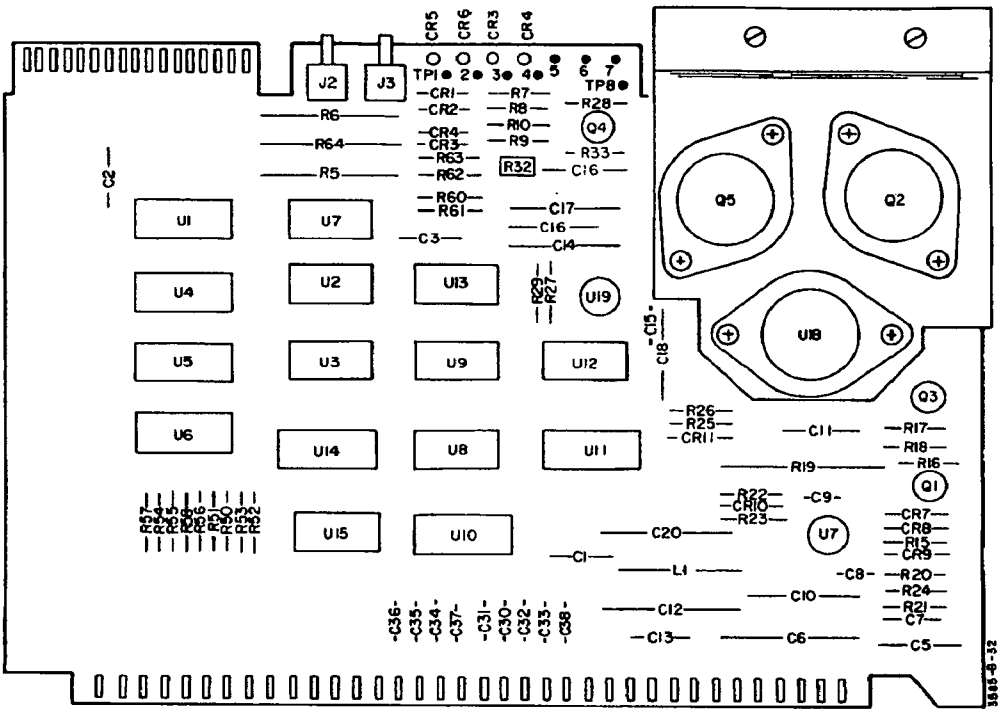


**A34**
**03585-66534**

**NOTE**

*If there is some doubt as to validity of the A34 Loop Lock LED's (A34CR3-6) the following checks may be performed. These checks assume that the Local Oscillator is operating properly according to Counter readings taken at A22J1. If your readings do not agree with Table 11-B-5-1 refer to Table 11-B-5-2.*

**Table 11-B-5-1. LO Loop Lock Indicator Truth Table**

| LED Checked | Operation | U12 Input(Pin) | U12 Output(Pin) | LED State | U13(8) |
|---|---|---|---|---|---|
| REF(CR5) | • Connect a 10MHz, +4dBm signal to the 3585's EXT REF IN. | L(1,2) | H(3) | off | L |
| | • Change the frequency to 10.001MHz. | H(1,2) | L(3) | on | H |
| FRN(CR6) | • Manual Sweep | L(4,5) | H(6) | off | L |
| | • Disconnect A32J1 | H(4,5) | L(6) | on | H |
| STEP(CR2) SUM(CR3) | • Manual Sweep | L(9,13) H(10,12) | H(8,11) | off | L |
| | • Disconnect A21J6 Enter: Res BW 3kHz | H(9,10,12,13) | L(8,11) | on | H |

**Table 11-B-5-2. LO Loop Lock Indicator Failure Table**

| U12 Input | U12 Output | LED State | U13(8) | Probable Defect |
|---|---|---|---|---|
| good | good | bad | good | LED |
| good | bad | bad | bad | U12 |
| bad | bad | bad | bad | For: REF - A21U25<br>FRN - A31U10<br>STEP - A26U10<br>SUM - A28U3 |
| good | good | good | bad | U13 |
| good | good | good | good | If LOCAL OSC UNLOCKED is displayed, go to the A83 Digital Signature Analysis Troubleshooting Tree (Service Group 11-C), check U6. |

# SERVICE GROUP C
# CENTRAL PROCESSOR

**Board Numbers A82, A83, A87**
**Part No. 03585-66583, -66587**

**INDEX:**



**ADJUSTMENTS:**
None

## Table 11-C-1. Digital Section Mnemonic Table
## Display

| Mnemonic | Description |
|---|---|
| AD0-9 | Address |
| ALD | Alphanumeric Load |
| DCLKH | Display Clock High |
| DD0-15 | Display Data |
| DIFL | Line Drawer Gain |
| DIFM | Line Drawer Gain |
| DL | Line Drawer Gain |
| DM | Line Drawer Gain |
| DMA0-9 | Direct Memory Access |
| DMARD | Direct Memory Access Read |
| DMARQ | Direct Memory Access Request |
| DSPCLK | Display Clock |
| DSPGO | Display Go |
| DSPIN | Display Interupt |
| DSPIR | Display Interupt Request |
| G/A | Graphics/Alphanumeric |
| HSWP | Horizontal Sweep |
| I1-2 | Instruction Code |
| OP1-3 | Operation Code |
| OY6-9 | Y Line Length Control Data |
| RAMP_EN | Ramp Enable |
| RAMPDN | Ramp Down |
| RMPCK | Ramp Clock |
| RMPONOFF | Ramp On Off |
| ROMFB | ROM Feedback |
| SAMP | Sample Pulse |
| TEST | Display Test |
| XA0-7 | X Alphanumeric Data |
| XCKEN | X Clock Enable |
| XDOT0-2 | X-axis Alphanumeric Dot |
| XLD | X-axis Load |
| XALPHA | X-axis Alphanumeric Position |
| XGR | X-axis Graphics Position |
| XOUT | X-axis Alphanumeric or Graphics Position |
| XD | X-axis Alphanumeric or Graphics Position |
| Y0-9 | Y-axis Graphics Data |
| YDOT0-2 | Y-axis Alphanumeric Dot |
| YLD | Y-axis Load |
| YALPHA | Y-axis Alphanumeric Position |
| YGR | Y-axis Graphics Position |
| YOUT | Y-axis Alphanumeric or Graphics Position |
| YD | Y-axis Alphanumeric or Graphics Position |
| ZCLK | Z Clock |
| ZON | Z Output On |
| ZREST | Z Reset |
| ZSTATE | Z State |

## Table 11-C-1. Digital Section Mnemonic Table
## Central Processor

| Mnemonic | Description |
|---|---|
| AB0-23 | Address Bus |
| ADCIR | Analog to Digital Converter Interrupt Request |
| ADRSCS | Address Chip Select |
| AS | Address Strobe |
| C0.6 | Clock - 625 kHz |
| C10 | Clock - 10 MHz |
| CLKDD | Clock Display Data |
| DB0-15 | Data Bus |
| DD0-15 | Display Data |
| DMARD | Direct Memory Access Read |
| DMAREF | Direct Memory Access Reference |
| DMARQ | Direct Memory Access Request |
| DRAMOE | Data RAM Output Enable |
| DRAMW | Data RAM Write |
| DSPCLK | Display Clock |
| DSPGO | Display Go |
| DSPIR | Display Interrupt Request |
| DTACK | Data Transfer Acknowledge |
| DTCNT2 | DTACK Counter 2 |
| ENMDB | Enable Machine Data Bus |
| HPIBCLK | HP-IB Clock |
| HPIB_INT | HP-IB Interrupt |
| IAC | Interrupt Acknowledged |
| IRQ | Interrupt Request |
| LA0-10 | Local Address |
| LD0-15 | Local Data |
| LDS | Lower Data Strobe |
| LDWRITE | Lower Data Write |
| MSCW | Miscellaneous Write |
| MDBW | Machine Data Bus Write |
| MDBR | Machine Data Bus Read |
| MDBS | Machine Data Bus Select |
| MFPCS | Multi-function Peripheral Chip Select |
| MFPDTACK | Multi-function Peripheral Data Transfer Acknowlege |
| MAN_RESET | Manual Reset |
| MD0-15 | Machine Data |

**Table 11-C-1. Digital Section Mnemonic Table**
**Central Processor (Cont'd)**

| Mnemonic | Description |
|---|---|
| OPTW | Option Write |
| OPTR | Option Read |
| OPTCS | Option Chip Select |
| OPTX | Option X |
| OPTY | Option Y |
| PR/W | Processor R/W |
| PW/R | Processor W/R |
| PROCREF | Processor Reference |
| PF_IRQ | Power Fail Interrupt Request |
| RESET | Reset |
| ROMCS | Read Only Memory Chip Select |
| RAMSEL | Random Access Memory Select |
| RAMCSI | Random Access Memory Chip Select In |
| RAMCS | Random Access Memory Chip Select |
| SO | Serial Data Out |
| SI | Serial Data In |
| UDS | Upper Data Strobe |
| UWRITE | Upper Data Write |
| UDWRITE | Upper Data Write |
| WMSCCS | Write Miscellaneous Chip Select |

**Table 11-C-1. Digital Section Mnemonic Table**
**I/O**

| Mnemonic | Description |
|---|---|
| 10MHz | 10 MHz Clock |
| 350KHz | 350 kHz IF |
| AB1-4 | Address Bus |
| ADCIR | Analog to Digital Converter Interrput Request |
| CNTCLK | Counter Clock |
| CNTRDY | Counter Ready |
| CNTSTRT | Counter Start |
| DSPIN | Display Installed |
| FPLEDATA | Front Panel LED Data |
| FPRPGR | Front Panel Rotary Pulse Generator Reset |
| FPSHIFT | Front Panel Shift |
| FPXFR | Front Panel Transfer - LED Data Latch Clock |
| H10DB | 10 dB Attenuator Control |
| H20DB | 20 dB Attenuator Control |
| H20HP | 20 dB High Power Attenuator Control |
| H5DB | 5 dB Attenuator Control |
| H75OHM | 50/75 ohm Input Select |
| HADC0-9 | Analog to Digital Converter Data |
| HCAL | Calibration in Progress (terminates input with dummy load and connects internal calibrator) |
| HLOZ | Terminated/High Impedance Input Select |
| HPIB_INT | HP-IB Interrupt |
| HPIBCLK | HP-IB Clock |
| HRPGR | RPG Reset |
| HSWP | Sweep in Progress |
| HTGB0-5 | Tracking Generator Data |
| IFACL | IF Address Clock |
| IFB0-5 | IF Data |
| IFDCL | IF Data Clock |
| INPRESET | Input Reset (range up/range down) |
| LCOL0-9 | Keyboard Column 0-9 |
| LCW | Rotary Pulse Generator Clockwise Rotation (Low) |
| LIDCL | LED Indicator Data Clock |
| LIDIN | LED Indicator Data In |
| LIPST | Instrument Preset |
| LIXCL | LED Indicator Data Latch Clock |
| LLOCK | Local Oscillator Locked (Low) |
| LOADRS | Local Oscillator Address Clock |
| LODATA | Local Oscillator Data Clock |
| LOVLI | LED - Overload Indicator |
| LODA0-4 | Local Oscillator Data |
| LRNGD | Down Range (signal too small) |
| LRNGU | Up Range (signal too large) |
| LROW0-7 | Keyboard Row 0-7 |
| LRPG0-3 | Rotary Pulse Generator Data |
| LSWPI | LED - Sweep Indicator |
| LTRIP | Input Termination Tripped |

**Table 11-C-1. Digital Section Mnemonic Table**
**I/O (Cont'd)**

| Mnemonic | Description |
|---|---|
| MD0-15 | Machine Data |
| MDBR | Machine Data Bus Read |
| MDBW | Machine Data Bus Write |
| MSCW | Miscellaneous Write |
| OVLDLED | Overload LED |
| PRESET | Instrument Preset |
| RADCCS | Read Analog to Digital Convertor Chip Select |
| RCNTHO | Read Counter High Order |
| RCNTLO | Read Counter Low Order |
| RESET | Reset |
| RFPCS | Read Front Panel Chip Select |
| RHPIBCS | Read HP-IB Chip Select |
| RINPCS | Read Input Chip Select |
| RSWITCH | Read Switches |
| SHIFTCS | Shift Chip Select |
| SWPLED | Sweep LED |
| TGHCLK | Tracking Generator High Clock |
| TGIN | Tracking Generator Installed |
| TGLCLK | Tracking Generator Low Clock |
| WCNTCS | Write Counter Chip Select |
| WFPCS | Write Front Panel Chip Select |
| WHPIBCS | Write HP-IB Chip Select |
| WIFCS | Write IF Chip Select |
| WINPCS | Write Input Chip Select |
| WLOCS | Write Local Oscillator Chip Select |
| WTGCS | Write Tracking Generator Chip Select |

## Processor/Memory I/O Test

1. Place A83 on an extender.

2. Close A83 SW101 positions 1 and 6.

3. Set the signature analyzer for:

   START ..... A82 TP4 (low-going)
   STOP ..... A82 TP4 (high-going)
   CLOCK ..... A82 U9(8) (high-going)
   GROUND ..... A82 TP1

4. Turn on the 3585.

5. Verify that the +5V signature (A83U1(16)) is "1USC."

6. Verify the Primary Signatures in Table 11-C-2.

   a. If the signatures are good, verify the secondary signatures in Table 11-C-3. The probable defect is U1,U2, U3, U4 or U120.

   b. If the primary signatures are bad, go to the Kernal SA1 Test in this Service Group.

**Table 11-C-2. Processor/Memory I/O -Primary Signatures**

| A83 pin | Signature | A83 pin | Signature |
|---|---|---|---|
| A25 | 2879 | B25 | A834 |
| A26 | 8849 | B26 | A1U4 |
| A27 | U882 | B27 | U8H7 |
| A28 | CH06 | B28 | 4884 |
| A29 | PFF9/95A1 * | B29 | 194C |
| A30 | U199/88U1 * | B30 | 8403 |
| A31 | 47FA/3PA2 * | B31 | 9CA0 |
| A32 | HP8P/A7P6 * | B32 | 7C8F |
| A33 | CH1F | | |
| A34 | 55UA | | |
| A35 | 1H9U | | |
| A36 | 304C | | |

(where * denotes unstable signature)

**Table 11-C-3. Processor/Memory I/O-Secondary Signatures**

| Pin No. | Signatures | | | |
|---|---|---|---|---|
| | U1 | U2 | U3 | U4 |
| 15 | 1USC | 6U65 | 1USC | 1USC |
| 14 | P22A | UU27 | — | 1USC |
| 13 | — | 1889 | — | 1USC |
| 12 | — | C951 | — | 1USC |
| 11 | — | 637A | 1USC | 1USC |
| 10 | F84F | HH45 | 1USC | 1USC |
| 9 | 6P2C | 1UA8 | 1USC | — |
| 7 | 0858 | 127H | 1USC | 1USC |

| U102 Inputs | Signature |
|---|---|
| 2 | 0000 |
| 3 | 1USC |
| 4 | 1USC |
| 5 | 1USC |
| 6 | 1USC |
| 7 | 0000 |
| 8 | 1USC |
| 9 | 1USC |

## I/O Data Output Test

1. Place the A83 board on an extender.
2. Close SW101 positions 1 and 6.
3. Set the signature analyzer for:

   START ..... A82 TP4 (low-going)
   STOP ..... A82 TP4 (high-going)
   CLOCK ..... A82 U9(8) (high-going)
   GROUND ..... A82 TP1

4. Turn on the 3585.
5. Verify that the +5V signature (U14(20)) is "1USC."

## IF/Video Filter

1. Verify the Primary Signatures in Table 11-C-4.
   a. If correct, the information being sent to the IF/Video Filter boards is correct at the A83 board output. Check the cable (W16) connecting A83 and A34 if problems persist.
   b. If incorrect, go to step 2 of this section.
2. Verify the Secondary Signatures in Table 11-C-5.
   a. If correct, replace A83 U14.
   b. If the input signatures are wrong, then there is a Machine Data bus problem. Go to the Kernal SA1 Test in this Service Group.

**Table 11-C-4. IF/Video Filter - Primary Signatures**

| A83U14 pin | Signature |
|---|---|
| 12 | C059 |
| 13 | 99OO |
| 14 | 4CAH |
| 15 | 37U3 |
| 16 | 9CAH |
| 17 | 2863 |
| 18 | PPCC |
| 19 | C74C |

**Table 11-C-5. IF/Video Filter - Secondary Signatures**

| A83U14 pin | Signature |
|---|---|
| 2 | 2879 |
| 3 | 8849 |
| 4 | U882 |
| 5 | CHO6 |
| 6 | 95A1/PFF9 * |
| 7 | 88U1/U199 * |
| 8 | 47FA/3PA2 * |
| 9 | A7P6 |

(where * denotes an unstable signature)

## Local Oscillator

1. Verify the Primary Signatures in Table 11-C-6.

   a. If correct, the information being sent to the LO Control Board (A34) by the A83 board is correct. Check the cable connecting A45 and A34 if problems persist.

   b. If incorrect, go to step 2.

2. Verify the Secondary Signatures using the schematic and Table 11-C-7.

   a. If correct, replace the defective part as indicated by the defective signature.

   b. If the U16 input signatures are incorrect, there is a Machine Data bus problem. If the U2/4 input signatures are incorrect, there is probably an Address Bus failure. Go to the Kernal SA1 Test in this Service Group.

**Table 11-C-6. Local Oscillator - Primary Signatures**

| A83U16 pin | Signature | A83U2 pin | Signature |
|---|---|---|---|
| 2 | OU5A | 7 | 127H |
| 5 | CC2P | 9 | 1UA8 |
| 7 | 6359 | | |
| 10 | AHAF | | |
| 12 | U357 | | |

**Table 11-C-7. Local Oscillator - Secondary Signatures**

| U16 inputs | Signature | U2/U4 inputs | Signature |
|---|---|---|---|
| 3 | 2379 | U2(1) | CH1F |
| 4 | 8849 | (2) | 55UA |
| 6 | U882 | (3) | 1H9U |
| 9 | 1USC | (4) | H12P |
| 11 | CH06 | (6) | 304C |
| 13 | PFF9/95A1 * | U4(4) | 1USC |

(where * denotes an unstable signature)

## Tracking Generator

1. Verify the Primary Signatures in Table 11-C-8.

   a. If correct, the information being sent to the Tracking Generator Board is correct at the output of the A45 board.

   b. If incorrect, go to step 2.

2. Verify the Secondary Signatures using the schematic and Table 11-C-9.

   a. If correct, replace the defective part as indicated by the defective signature.

   b. If the U7 or U3(10) input signatures are incorrect, there is a Machine Data Bus or Address bus failure, respectively. Go to the Kernal SA1 Test in this Service Group.

**Table 11-C-8. Tracking Generator - Primary Signatures**

| A83U7 pin | Signature | A83U3 pin | Signature |
|---|---|---|---|
| 2 | U7U0 | 7 | 1USC |
| 5 | 2378 | 9 | 1USC |
| 7 | 411U | – | – |
| 10 | 1355 | – | – |
| 12 | UC3P | – | – |
| 15 | 31HF | – | – |

Table 11-C-9. Tracking Generator-Secondary Signatures

| U7 Input Signature | | U3 Output Signature | | U3 Input Signature | |
|---|---|---|---|---|---|
| 3 | 2879 | 10 | 1USC | 1 | CH1F |
| 4 | 8849 | | | 2 | 55UA |
| 6 | U882 | | | 3 | 1H9U |
| 11 | CH06 | | | 4 | 304C |
| 13 | PFF9/95A1 * | | | 5 | 1USC |
| 14 | 88U1/U199 * | | | 6 | 1USC |

(where * denotes unstable signature)

## Input Section

1. Turn off the 3585.
2. Close SW101 positions 2 and 6. All others should be open.
3. Turn on the 3585.
4. Short +5V to each of the following A83 pins, one-at-a-time. A relay should "click" each time.

| Line Name | A83 pin |
|---|---|
| 5dB | A1 |
| 10dB | A2 |
| 20dB | A3 |
| 20HP | A4 |
| 1Meg | A5 |
| 75ohm | A6 |
| ModeSel | A10 |

5. Verify that the +5V signature (A83U8(16)) is "U67C."
6. Verify the Primary Signatures in Table 11-C-10.
   a. If correct, the information being sent to the Input Board is correct at the outputs of the A83 board.
   b. If incorrect, go to step 7.

7. Verify the Secondary Signatures in Table 11-C-11.

   a. If correct, replace the defective part as indicated by the defective signature.

   b. If the U8 signatures are incorrect, there is a Machine Data Bus failure. If the U3 or U101 input signatures are incorrect, there is an Address Bus failure. Go to the Kernal SA1 Test in this Service Group.

**Table 11-C-10. Input Section - Primary Signatures**

| U8 Name | Outputs | Signature | Name | pin | Signature |
|---|---|---|---|---|---|
| 5dB | U8(2) | 56PU | LTRIP | U6(4) | U67C |
| 10dB | (5) | 80PF | LRNGD | U5(1) | U67C |
| 20dB | (7) | PFH2 | LRNGU | U5(13) | 0000 |
| 20HP | (10) | 71P4 | | U101(10) | 0000 |
| 1Meg | (12) | F410 | | | |
| 75ohm | (15) | 58U7 | | | |

**Table 11-C-11. Input Section - Secondary Signatures**

| U8 Name Inputs | Signature | U3 input | Signature |
|---|---|---|---|
| MD0 | 3 | 56PU | 1117H |
| MD1 | 4 | 80PF | 20CPH |
| MD2 | 6 | PFH2 | 345F6 |
| /WINPCS | 9 | U67C | 406AA |
| MD3 | 11 | 71P4 | 5U67C |
| MD4 | 13 | F410 | 6 U67C |
| MD5 | 14 | 58U7 | |

| U101 input | Signature |
|---|---|
| 1 | 117H |
| 2 | 0CPH |
| 3 | 45F6 |
| 13 | 56PU |
| 14 | U67C |

## Kernal SA1 Test (Processor Self Test)

This test is useful in isolating address and data bus failures. It forces the processor (A82 U3) to cycle through all memory addresses, thus allowing the address bits to be tested.

1. Remove the A83 assembly.

2. Place A82 on an extender.

3. Ground A82 TP5.

4. Set the signature analyzer for:

| | | |
|---|---|---|
| START | A82 TP4 | (low-going) |
| STOP | A82 TP4 | (high-going) |
| CLOCK | A82 TP3 | (low-going) |
| GROUND | A82 TP1 | |

5. Turn on the 3585.

6. Verify that the +5V signature (U5(14)) is "A70F". Allow approximately 10 seconds for the singature to stabalize.

7. Verify the primary signatures (allow several seconds for each signature to stabalize).

8. If any of the signatures are incorrect, then the A82 board is failing. The primary signature table lists (Table 11-C-12) the components which are suspect for each incorrect signature. If the components listed do not repair the problem, then suspect an open trace on the A82 board.

9. If all of the primary signatures are correct, then the A83 board is failing. Without changing the signature analyzer setup, place the A83 board on an extender.

10. Recycle the power to the 3585.

11. Verify the secondary signatures Table 11-C-13 (allow several seconds for each signature to stabalize).

12. If any of the signatures are incorrect, then the A83 board is failing. The secondary signature table lists the components which are suspect for each incorrect signature. If the components listed do not repair the problem, then suspect an open trace on the A83 board.

**Table 11-C-12. Primary Signatures (assume A82 unless stated otherwise)**

| U3 Pin# | Signal Name | Signature | Suspect Components* | | | | | | | |
|---|---|---|---|---|---|---|---|---|---|---|
| 1 | DBO | A70F | U3 | U106 | U21 | U11 | U7 | U108 | RN1 | |
| 2 | DB1 | A70F | ↓ | ↓ | ↓ | ↓ | ↓ | ↓ | ↓ | |
| 3 | DB2 | A70F | ↓ | ↓ | ↓ | ↓ | ↓ | ↓ | ↓ | |
| 4 | DB3 | A70F | ↓ | ↓ | ↓ | ↓ | ↓ | ↓ | ↓ | |
| 5 | DB4 | 0000 | U3 | U106 | U21 | U11 | U7 | U108 | RN1 | |
| 29 | AB1 | 62UC | U3 | U106 | U107 | U11 | U12 | U15 | A83U1-4 | A83U101 |
| 30 | AB2 | HP56 | ↓ | ↓ | ↓ | ↓ | ↓ | ↓ | A83U1-4 | A83U101 |
| 31 | AB3 | 9344 | ↓ | ↓ | ↓ | ↓ | ↓ | ↓ | A83U1-4 | A83U101 |
| 32 | AB4 | 18CU | ↓ | ↓ | ↓ | ↓ | ↓ | ↓ | A83U1-4 | A83U101 |
| 33 | AB5 | 9P86 | U3 | U106 | U107 | U11 | U12 | U15 | | |
| 34 | AB6 | 3951 | U3 | | | U11 | U12 | U15 | | |
| 35 | AB7 | UUUU | ↓ | | | ↓ | ↓ | U15 | | |
| 36 | AB8 | AA44 | ↓ | | | ↓ | ↓ | U15 | | |
| 37 | AB9 | H133 | ↓ | U16 | | ↓ | ↓ | | | |
| 38 | AB10 | AHOP | U3 | U16 | | U11 | U12 | | | |
| 39 | AB11 | 69F8 | U3 | U16 | | U11 | U12 | | | |
| 40 | AB12 | 2127 | ↓ | ↓ | | ↓ | ↓ | | | |
| 41 | AB13 | 5CC2 | ↓ | ↓ | | ↓ | ↓ | | | |
| 42 | AB14 | A214 | ↓ | ↓ | | ↓ | ↓ | | | |
| 43 | AB15 | H483 | U3 | U16 | | U11 | U12 | | | |
| 44 | AB16 | HFFH | U3 | U16 | | U11 | U12 | | | |
| 45 | AB17 | 62UC | ↓ | | | | | | | |
| 46 | AB18 | HP56 | ↓ | | | | | | | |
| 47 | AB19 | 9344 | ↓ | | | | | | | |
| 48 | AB20 | 18CU | U3 | U6 | | | | | | |
| 50 | AB21 | 9P86 | U3 | U6 | | | | | | |
| 51 | AB22 | 3951 | ↓ | U6 | | | | | | |
| 52 | AB23 | 0000 | U3 | | | | | | | |
| 54 | DB15 | 0000 | U3 | U22 | U109 | | U12 | | | |
| 55 | DB14 | A70F | ↓ | ↓ | ↓ | | ↓ | | | |
| 56 | DB13 | A70F | ↓ | ↓ | ↓ | | ↓ | | | |
| 57 | DB12 | A70F | ↓ | ↓ | ↓ | | ↓ | | | |
| 58 | DB11 | A70F | U3 | U22 | U109 | | U12 | | | |
| 59 | DB10 | A70F | U3 | U22 | U109 | | U12 | | | |
| 60 | DB9 | A70F | ↓ | U22 | U109 | | U12 | | | |
| 61 | DB8 | 0000 | ↓ | U22 | U109 | | U12 | | | |
| 62 | DB7 | A70F | ↓ | U106 | U21 | U11 | | U108 | | |
| 63 | DB6 | A70F | ↓ | U106 | U21 | U11 | | U108 | | |
| 64 | DB5 | A70F | U3 | U106 | U21 | U11 | | U108 | | |

**If the suspect components do not repair the problem, the failure is probably due to a defective signal trace.*

## Table 11-C-13. Secondary Signatures (A83 Data Bus)

| Signature Test Point | Signal Name | Signature | Suspect ICs* | | | | | | | | | | | | |
|---|---|---|---|---|---|---|---|---|---|---|---|---|---|---|---|
| U13(18) | MDO | A70F | U5 | U7 | U8 | U10 | U11 | U13 | U16 | U18 | U19 | U20 | U22 | U102 | U105 |
| (17) | MD1 | A70F | \| | \| | \| | \| | \| | \| | \| | \| | \| | \| | \| | \| | \| |
| (16) | MD2 | A70F | \| | \| | \| | \| | \| | \| | \| | \| | \| | \| | \| | \| | \| |
| (15) | MD3 | A70F | ↓ | ↓ | ↓ | ↓ | ↓ | ↓ | ↓ | ↓ | ↓ | ↓ | ↓ | ↓ | ↓ |
| (14) | MD4 | 0000 | U5 | U7 | U8 | U10 | U11 | U13 | U16 | U18 | U19 | U20 | U22 | U102 | U105 |
| (13) | MD5 | A70F | U5 | U7 | U8 | U10 | U11 | U13 | U16 | U18 | U19 | U20 | U22 | U102 | U105 |
| (12) | MD6 | A70F | U5 | | | U10 | U11 | U13 | | U18 | U19 | U20 | U22 | U102 | U105 |
| (11) | MD7 | A70F | U5 | | | U10 | U11 | U13 | | U18 | U19 | U20 | U22 | U102 | U105 |
| U15(18) | MD8 | 0000 | U12 | U15 | U21 | | | | | | | | | | |
| (17) | MD9 | A70F | U12 | U15 | U21 | | | | | | | | | | |
| (16) | MD10 | A70F | U12 | U15 | U21 | | | | | | | | | | |
| (15) | MD11 | A70F | \| | \| | \| | | | | | | | | | |
| (14) | MD12 | A70F | \| | \| | \| | | | | | | | | | |
| (13) | MD13 | A70F | \| | \| | \| | | | | | | | | | |
| (12) | MD14 | A70F | ↓ | ↓ | ↓ | | | | | | | | | | |
| (11) | MD15 | 0000 | U12 | U15 | U21 | | | | | | | | | | |

**If the suspect ICs do not repair the problem the failure is probably due to a defective signal trace.*

## RAM Address and Data Tests

This test checks the memory (RAM) addressing and data capability and also for stuck lines. It is more exhaustive than the RAM test portion of the turn-on diagnostics. It may help isolate odd (peculiar) failures.

### Address Test

1. Place A82 on an extender.
2. Close A83 SW101 positions 6, 2, 1.
3. Turn on the 3585.
4. Observe the four LEDs on A83. CR104 (far right) should be flashing on and off to indicate that the test is proceeding. CR103 should stay on.
   a. If CR101 (far left) and not CR102 turns on, then the outputs of the high-order RAM or something (U20 or U22 inputs) on the Latched Data Bus are faulty. Replace U18. If this does not help, then replace U20 and U22.
   b. If CR102 and not CR101 turns on, then the outputs the low-order RAM (or the U19 or U21 inputs) are faulty. Replace U17. If this does not help, then replace U19 and U21.
   c. If both CR101 and CR102 turn on, then there is probably an error on the Latched Address Bus (i.e. the inputs to RAM). Suspect U13-U18. Go to the Display Memory Address Test to further isolate the problem.

### Data Test

1. Turn off the 3585.
2. Close A83 SW101 positions 6 and 3 (all others should be "open").
3. Turn on the 3585.
4. Observe the four LEDs on A83. CR104 (far right) should be flashing on and off to indicate that the test is proceeding. CR103 should stay on.
   a. If CR101 (far left) and not CR102 turns on, then the outputs of the high-order RAM or something (U20 or U22 inputs) on the Latched Data Bus are faulty. Replace U18. If this does not help, then replace U20 and U22.
   b. If CR102 and not CR101 turns on, then the outputs the low-order RAM (or the U19 or U21 inputs) are faulty. Replace U17. If this does not help, then replace U19 and U21.
   c. If both CR101 and CR102 turn on, then there is probably an error on the Latched Address Bus (i.e. the inputs to RAM). Suspect U13-U18. Go to the Display Memory Address Test to further isolate the problem.

## Counter Test

This procedure tests the counter circuit of the A83 assembly.

1. Place A83 on an extender.

2. Turn on the 3585.

3. Do you measure 10MHz (TTL) at A83 U17(1)?

   a. If yes, then continue with step 4.

   b. If no, then do you measure 10MHz at U17(2)?

      i. If yes, then replace U17.

      ii. If no, then go to the Clock Generator Troubleshooting Tree (Service Group D).

4. Using an oscilloscope, observe the 350kHz signal at U17(14). Does the signal resemble Figure 11-C-1?

   a. If yes, then continue with step 5.

   b. If no, then do you measure 350kHz at U17(3)?

      i. If yes, then replace U17.

      ii. If no, then continue with step c.

   c. Do you measure 350kHz at W28?

      i. If no, then troubleshoot the 350kHz IF from A14 (Service Group A-4).

      ii. If yes, then refer to schematic C-3 (03585-66583) to troubleshoot. Suspect T1, Q1 or U23.

5. Set the 3585 for:

   SHIFT 6 1 0
   INSTR PRESET
   COUNTER ..... ON
   CF STEP SIZE ..... 0.1Hz

6. Using an oscilloscope observe the signals at U17(4) (/CNTSTRT) and at U17(5) (/WCNTCS). Both should be +4.4V with negative-going pulses every 3.5ms.

   Set the oscilloscope for:
   0.2 V/div
   1 msec/div
   Adjust the trigger control as necessary to observe the signal.

7. If either of the signals observed is incorrect, then go to the I/O Data Output Test (Local Oscillator portion) in this Service Group. Verify the U2(1,2,3,6) and U4(4) signatures in Table 11-C-7.

   a. If the signatures are correct, replace U4.

   b. If the signatures are incorrect, there is probably an Address Bus failure. Go to the Kernal SA1 Test in this Service Group.

8. Observe the signal at U17(12) (10CNT). Compare with Figure 11-C-2. Notice that the length of the 10MHz burst before the positive pulse should be directly proportional to the counter display. (You may have to adjust the trigger control to observe the signal).

   Counter Frequency = (20MHz/350kHz) x CF Step Size
   = 5.6Hz (+/- 0.1) Hz

   10MHz burst length = approximately 5.6ms

   a. If the signal at U17(12) is correct, but the display does not show the correct counter frequency, then the probable defect is U20, U21 or U22.

   b. If the signal at U17(12) is not correct, then continue with step 9.

9. Observe the signal at U17(17) (CNTRDY). Compare with Figure 11-C-3. The length of the negative going pulse should also equal approximately 5.6ms.

   If the signal at U17(17) is incorrect, the probable defect is U17, U18 or U19.

**Note:** A 10:1 probe was used in each of the oscillograms.
Oscilloscope setting : 0.2V/div, 1$\mu$s/div
Adjust trigger level as necessary.

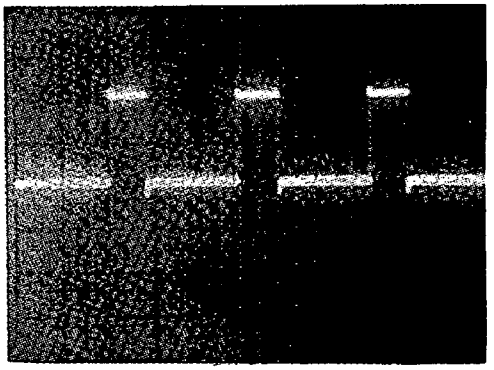

**Figure 11-C-1 "3KS" A83U17 (14)**

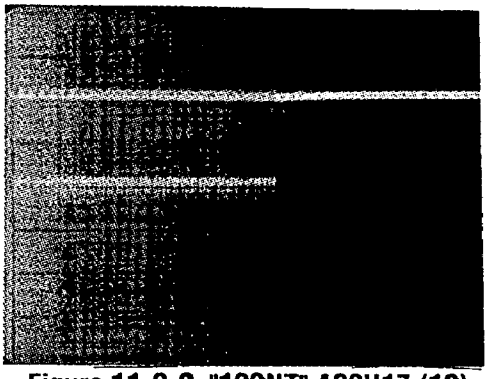

**Figure 11-C-2 "10CNT" A83U17 (12)**

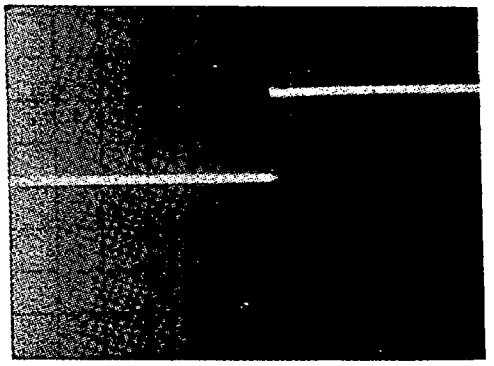

**Figure 11-C-3 "CNTRDY" A83U17 (17)**

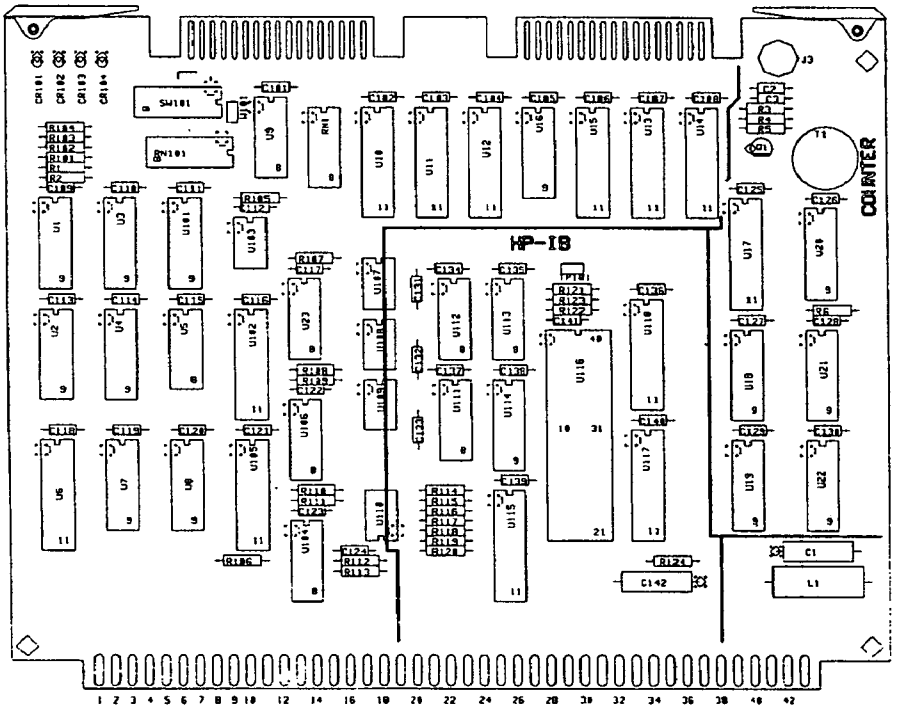


A83
03585-66583

## Keyboard Troubleshooting Procedure

1. Disconnect all other devices from the HP-IB bus.

2. Turn on the 3585.

3. Set the 3585 for

   SHIFT 6 1 4
   PRESET
   CENTER FREQUENCY (starts the test)

Test mode 14 displays a matrix of all possible front panel switch positions. This mode allows the user to check for shorted or stuck keys. As each key is pressed, a "0" will appear in its corresponding row/column location. Table 11-C-13 lists the row/column location for each of the keys.

4. If test mode could not operate and/or in order to determine if A83 (I/O) or A87 (keyboard) is the cause of the failure, then continue with step 5.

5. Turn off the 3585.

6. Place A83 on an extender and disconnect keyboard ribbon cable, W45.

7. Close A83 SW101 positions 1 and 6.

**Table 11-C-13 Front Panel Keyboard Matrix**

| Key | Row/Column | Key | Row/Column |
|---|---|---|---|
| LOCAL | 7/40 | RANGE | 3/8 |
| FREE RUN | 5/56 | REF LVL TRACK | 7/16 |
| LINE TRIGGER | 6/56 | 1M Ohm | 5/16 |
| EXT TRIGGER | 7/56 | 50 Ohm | 3/16 |
| CONT SWEEP | 2/56 | 75 Ohm | 4/16 |
| SINGLE SWEEP | 3/56 | SHIFT (blue) | 3/72 |
| MANUAL ENTRY | 4/56 | SAVE | 2/40 |
| CLEAR A | 0/32 | RECALL | 3/40 |
| STORE A "→" B | 1/32 | CENTER FREQUENCY | 0/0 |
| VIEW A | 2/32 | FREQUENCY SPAN | 1/0 |
| MAX HOLD | 4/32 | REFERENCE LEVEL | 5/0 |
| VIEW B | 3/32 | dB/DIV | 6/0 |
| A-B | 2/24 | START FREQ | 2/0 |
| MARKER | 1/24 | STOP FREQ | 3/0 |
| MAN SWEEP | 4/64 | REF LEVEL VOLT | 7/0 |
| REF LVL | 3/24 | CF STEP SIZE | 4/0 |
| CF | 0/64 | STEP UP | 1/40 |
| DISP LINE | 4/24 | STEP DOWN | 0/40 |
| COUNTER | 1/64 | 0 | 0/48 |
| MKR "→" CF | 7/32 | 1 | 1/48 |
| PEAK SEARCH | 1/72 | 2 | 2/48 |
| NOISE LVL | 7/24 | 3 | 3/48 |
| MKR "→" REF LVL | 6/24 | 4 | 4/48 |
| NEXT PEAK | 2/72 | 5 | 5/48 |
| SIG TRACK | 0/72 | 6 | 6/48 |
| OFS "→" SPAN | 6/32 | 7 | 7/48 |
| OFFSET | 0/24 | 8 | 0/56 |
| ENTER OFFSET | 2/64 | 9 | 1/5 |
| COUPLED TO SPAN | 0/16 | DECIMAL | 5/40 |
| RES BW HOLD | 2/16 | MINUS | 6/40 |
| PRESET | 1/16 | MHz dBm V | 4/8 |
| RES BW | 0/8 | kHz dBV mV | 5/8 |
| VIDEO BW | 1/8 | Hz dB uV | 6/8 |
| SWEEP TIME | 2/8 | SEC | 7/8 |
| PLOT SETUP | 4/72 | | |
| PLOT | 5/72 | | |
| PLOT MARKER | 6/72 | | |
| AUTO RANGE | 6/16 | | |

8. Set the signature analyzer for:

START ..... A82 TP4 (low-going)
STOP. ..... A82 TP4 (high-going)
CLOCK ..... A82 U9(8) (high-going)
GROUND ..... A82 TP4

9. Turn on the 3585 and verify the signatures in Table 11-C-14.

   a. If the signatures are incorrect, suspect A83 U10 (or RN1), U11, or U12 (or RN1), respectively.

   b. If the signatures are correct, continue with step 10.

**Table 11-C-14. Keyboard - I/O Signatures**

| Signal Name | A83U11 pin | Signature |
|---|---|---|
| "row7" | 12 | 985A |
| "row6" | 13 | 3 AAH |
| "row5" | 14 | 2UFP |
| "row4" | 15 | HC82 |
| "row3" | 16 | 69F0 |
| "row2" | 17 | 8880 |
| "row1" | 18 | 44H5 |
| "row0" | 19 | P0P3 |

| Signal Name | A83U10 pin | Signature |
|---|---|---|
| "col0" | 2 | 1USC |
| "col1" | 3 | ▪ |
| "col2" | 4 | ▪ |
| "col3" | 5 | ▪ |
| "col4" | 6 | ▪ |
| "col5" | 7 | ▪ |
| "col6" | A83U12(2) | ▪ |
| "col7" | A83U12(3) | ▪ |

10. If the signatures are good, then repeat steps five through eight. Again, verify the signatures in Table 11-C-14, however, this time with W45 installed. Verify that the +5V signature at U10(20) is "1USC."

   a. If any of the signatures for rows 0-3 are incorrect, the probable defect is A87 U7 or W45.

   b. If any of the signatures for rows 4-7 are incorrect, the probable defect is A87 U8 or W45.

## Keyboard LED Test

1. Turn on the 3585. All front panel LEDs (except "overload" and "sweeping") should be on. If one or more of the LEDs is not on, then turn off the 3585 and continue with step 2.

2. Close A83 SW101 positions 6 and 1.

3. Set the signature analyzer for:

   START ..... A82 TP4 (low-going)
   STOP ..... A82 TP4 (high-going)
   CLOCK ..... A82 U9(8) (high-going)
   GROUND ..... A82 TP1

4. Swing the front panel away from the instrument so that the IC pins on the back of the keyboard (A87) may be accessed (see steps a through g of the Key Replacement Procedure).

5. Turn on the 3585 and check the A87 Primary Signatures in Table 11-C-15.

   a. If the U1(11) or U1(12) signature is incorrect, verify the A83 U2 or U4 input signatures (shown below), respectively.

| U2 pin | Signature | U4 pin | Signature |
|---|---|---|---|
| 1 | CH1F | 1 | CH1F |
| 2 | 55UA | 2 | 55UA |
| 3 | 1H9U | 3 | 1H9U |
| 4 | H12P | 4 | 1USC |
| 6 | 304C | 6 | 304C |

      i. If these signatures are correct, suspect A83 U2 (or U4), or U9.

      ii. If incorrect, go to the Kernal SA1 Test of Service Group C.

   b. If the Primary Signatures are correct, the defect is the LED. Use the A87 keyboard schematic to find the LED reference designator. Go to the Keyboard LED Replacement Procedure.

   c. If the Primary Signatures are incorrect, then verify that the signature at A87 U1(14) is "1APF."

      i. If U1(14) is correct, the probable defect is A87 U1-U4, respectively.

      ii. If U1(14) is incorrect, suspect A83 U101.

**Table 11-C-15. keyboard LED Test, Primary Signatures**

| U1 pin | Signature | U2 pin | Signature |
|---|---|---|---|
| 1 | 3HAU | 1 | C19A |
| 2 | 029H | 2 | 9076 |
| 3 | 0A50 | 3 | 37U3 |
| 4 | FP61 | 4 | 157F |
| 5 | HH70 | 5 | PCUU |
| 6 | P2C1 | 6 | UP1F |
| 7 | A296 | 7 | F537 |
| 11 | C951 | 15 | 8F54 |
| 12 | 1USC | | |
| 15 | P2C8 | | |

| U3 pin | Signature | U4 pin | Signature |
|---|---|---|---|
| 1 | A2C5 | 1 | 5HA6 |
| 2 | F239 | 2 | 9F98 |
| 3 | 2P55 | 3 | 6HP6 |
| 4 | C479 | 4 | 5UUH |
| 5 | PPP2 | 5 | 43HA |
| 6 | 6C99 | 6 | FP2C |
| 7 | 1807 | 7 | H590 |
| 15 | 4AH2 | 15 | 0433 |

## Keyboard Key Replacement Procedure

a. Turn the 3585 power off.

b. Remove the instruments top cover.

c. Remove the plastic trim strip from the top of the front frame.

d. There are five screws under the trim strip, remove the first, third and fifth screw.

e. The front panel is now loose. To remove it, find the space between the CRT shield and the cover marked "A17" Between these two items there is a space which allows access to the rear of the front panel. By applying gentle pressure to the rear of the front panel, the top of the front panel will swing out.

f. Once the top edge of the front panel has swung away from the front frame it may be lifted out of the grove in which it sits.

g. The front panel should now be free of the instrument except for a large ribbon cable.

h. Remove the ribbon cable from the back of the keyboard.

i. Set the keyboard face down on a soft, protected surface.

j. Locate the round, black plastic housing for the knob. Disconnect the four wire cable from the PC board (A87J2).

k. Remove the 12 screws which hold the PC board to the front panel.

l. Place the keyboard (A87) face up on your work surface.

m. Remove the key cap from the defective key. This requires a firm, straight pull. Do not pull at an angle as this can break part of the key off inside the key cap.

n. Locate the defective key on the back side (trace side) of the PC board.

o. While pulling on the body of the key, heat the plastic stakes on the back side of the PC board. This should allow removal of the key body.

p. Clean off any excess plastic from the key mounting holes.

q. Insert a new key.

r. While holding the key from the keyboard side, *carefully* melt the plastic stake pins just enough to hold the key firmly in place. Note the degree that the other key stakes have been melted as a reference.

s. Allow the key stake to cool and harden before testing the keys operation.

t. Replace the key cap.

u. Thread the cable from the knob housing through the large hole in the PC board and connect it to A87J2.

v. Mount the keyboard (A87) to the front panel with the twelve mounting screws.

w. Replace the ribbon cable in its socket and mount the front panel in the instrument.

**Keyboard LED Replacement.**

a. Follow steps a. thru l. of the Keyboard Key Replacement Procedure.

b. If one of the "external" LED's, such as the HP-IB status lights, is to be replaced, simply unsolder it and replace it with a new LED. (The cathode location is marked with a dot.) Pay careful attention to the vertical orientation of the LED when installing a new one. Check the alignment with the front panel and adjust as necessary.

c. If one of the LED's in a key is to be replaced, remove the key cap of the faulty LED. This requires a firm, straight pull. Do not pull at an angle as this can break part of the key off inside the key cap.

d. Turn the board over and unsolder the leads of the LED with a desoldering tool. Be careful not to melt the plastic stake which holds the key to the board.

e. Return the PC board to a face up position.

f. With a small pair of tweezers reach down inside the white portion of the key and remove the LED.

g. Again using the desoldering tool, clean out any remaining solder in the holes for the LED.

h. Using the back side of the PC board, shape the leads of the LED so that it will fit properly.

i. Using the tweezers, insert the LED into its proper location with the cathode (marked lead) toward the *top* of the PC board. Be sure the LED is fully seated on the PC board. If it is not, it can interfere with key operation.

j. Solder the leads of the LED to the PC board. Again, be careful not to melt the plastic key stake.

k. Follow steps t. thru w. of the Keyboard Key Replacement Procedure.

## "Knob" Troubleshooting Procedure

This procedure will help locate "knob" problems such as: 1) the marker will only move one direction; 2) the marker will not move at all; 3) the keyboard will not respond, but the marker can be moved or; 4) the marker is always at the left edge of the CRT.

1. Set the 3585 for:

   SHIFT 6 1 4
   PRESET
   CENTER FREQUENCY (starts test)

Test mode 14 tests the RPG. When the knob is rotated slowly clockwise, the display should read "CW 1." As the speed of rotation is increased, the number should increase (to a maximum of 15). Similarly, counterclockwise rotation should be indicated with "CCW."

2. If there is no indication using test mode 14, then check A82U5(2,3) for pulses using a logic probe while the knob is being turned.

   a. If there are no pulses, then the probable defect is the RPG.

   b. If there are pulses, then check U5(5) and U6(2,3,6,7) for logic pulses when the knob is turned (rotate the knob CCW when measuring U6(7) for pulses).

3. If there are no pulses measured, then the probable defect is U5 or U6, respectively. If all are pulsing, then check U6(14) for pulses with the logic probe while rotating the knob.

   a. If U6(14) is not pulsing, the probable defect is A83U9 or U2.

   b. If U6(14) is pulsing, then check A82 U108(19) for pulses (the knob does not need to be rotated).

4. If U108(19) is pulsing, the probable defect is A82 U108 or U109. If U108(19) is not pulsing, the probable defect is A82 U3, U6 or U8.

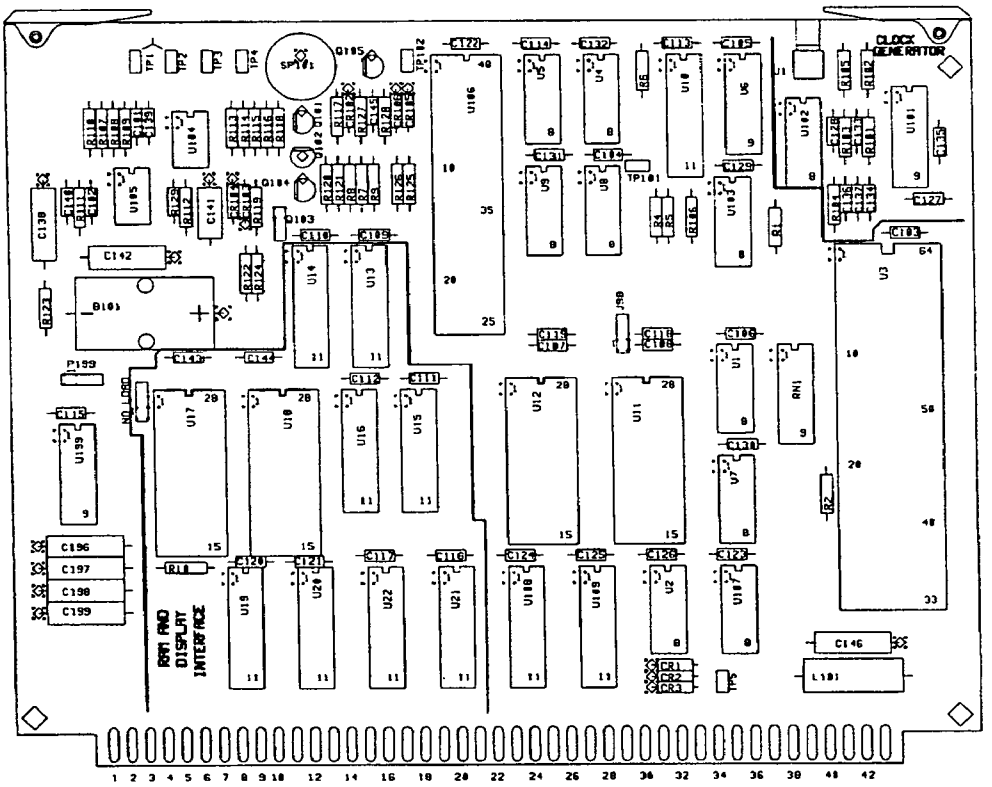


**A82**
**03585-66582**

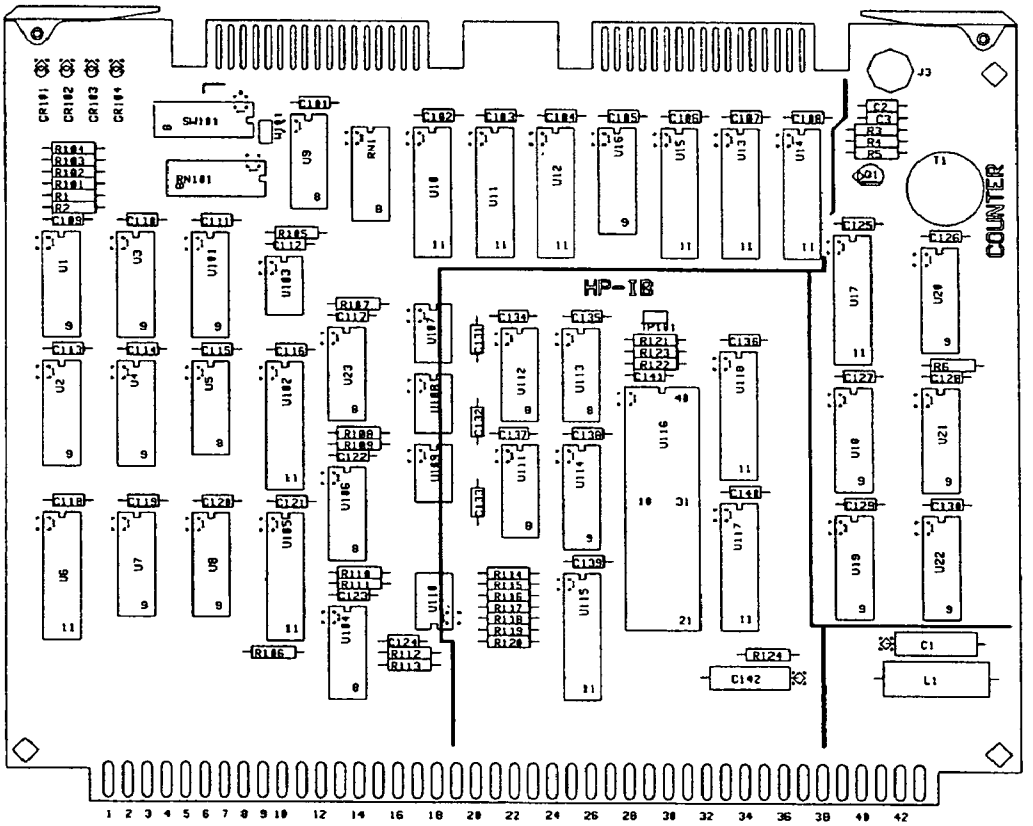


**A83**
**03585-66583**

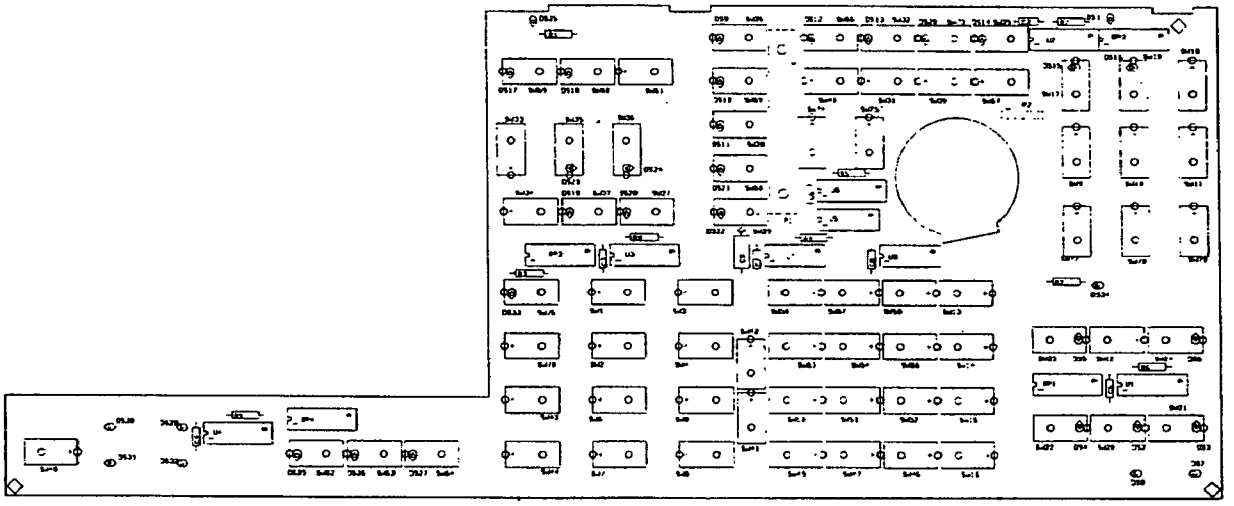

**A87**
**03585-66587**

# SERVICE GROUP D
# DISPLAY

## Board Numbers A82, 85, 86
## HP Part Number 03585-66582, -66585 thru -66586

### INDEX



### EQUIPMENT REQUIRED:

| Instrument | Required Characteristics | Recommended Model No. |
|---|---|---|
| Digital Multimeter | 4½ digits<br>dc Accuracy ±0.05% ± 3 digits<br>Range: 0.2V to 200V | HP 3466A |
| Oscilloscope | Bandwidth: dc to 100Mhz<br>Vertical Sensitivity 0.005V/Div | HP 1740A |
| Digital Signature Analyzer | N.A. | HP 5004A/5006A |
| Frequency Counter | | HP 5328A/B |
| 10:1 probe | | |

A85J3 in "Test"

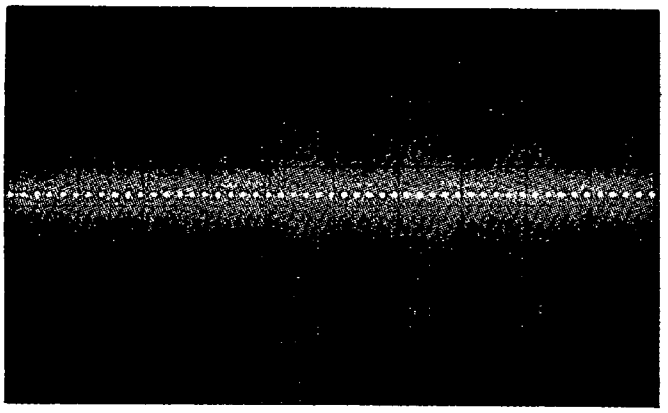

**Figure 11-D-1. Display Test Pattern**

(This pattern indicates that most features of the A85U3 Display Processor are functioning. However, U3 can still be bad due to stuck I/O lines.
Note: The vertical position of this line can be random)

Blue 6 1 2 Preset

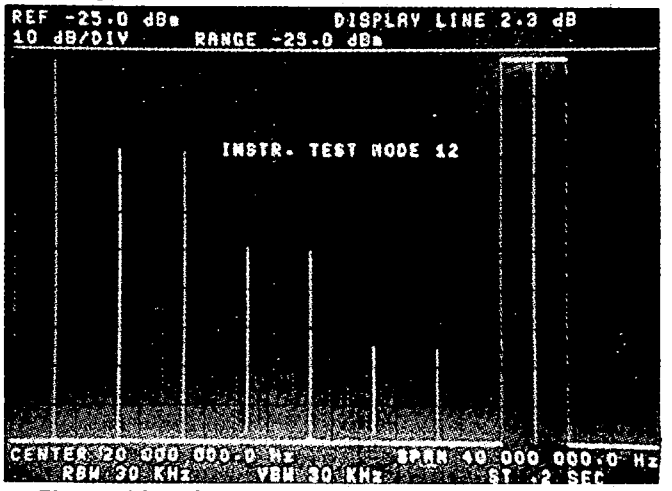


**Figure 11-D-2. Processor Controlled Test Pattern**

(This pattern indicates that main processor and A85U3 are functioning.)

A86J6

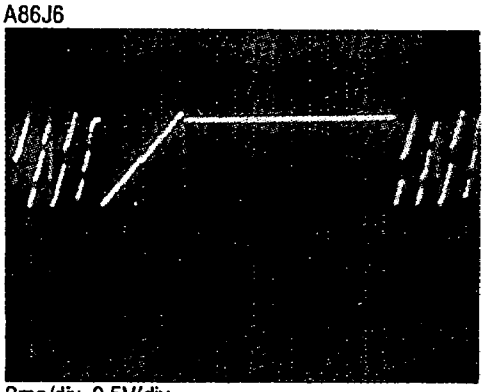

2ms/div, 0.5V/div

A86J7

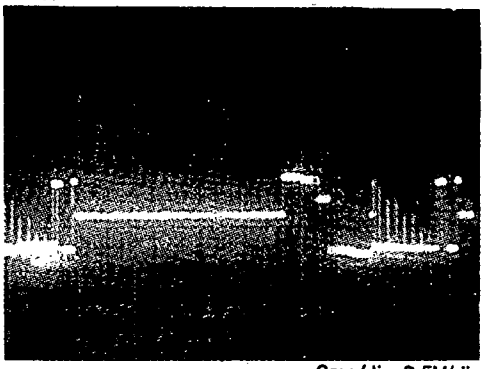

2ms/div, 0.5V/div

**Figure 11-D-3. A86 X and Y Outputs**

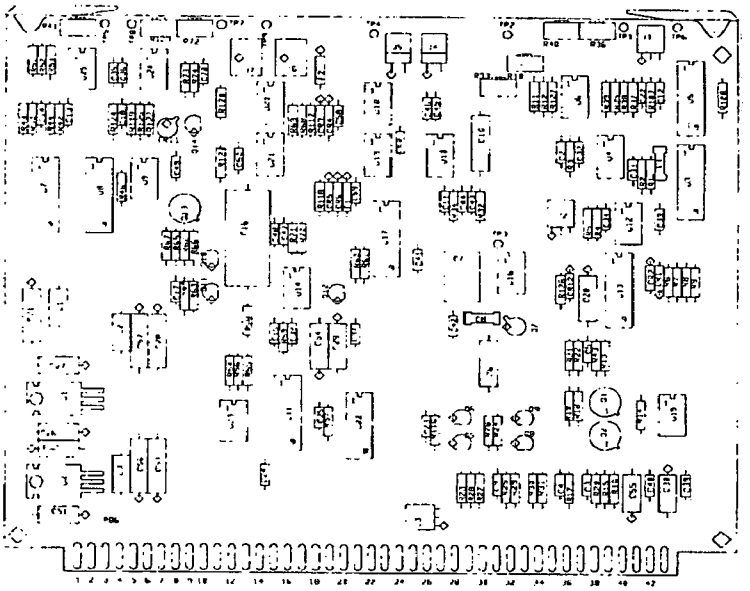

A86
03585-66586

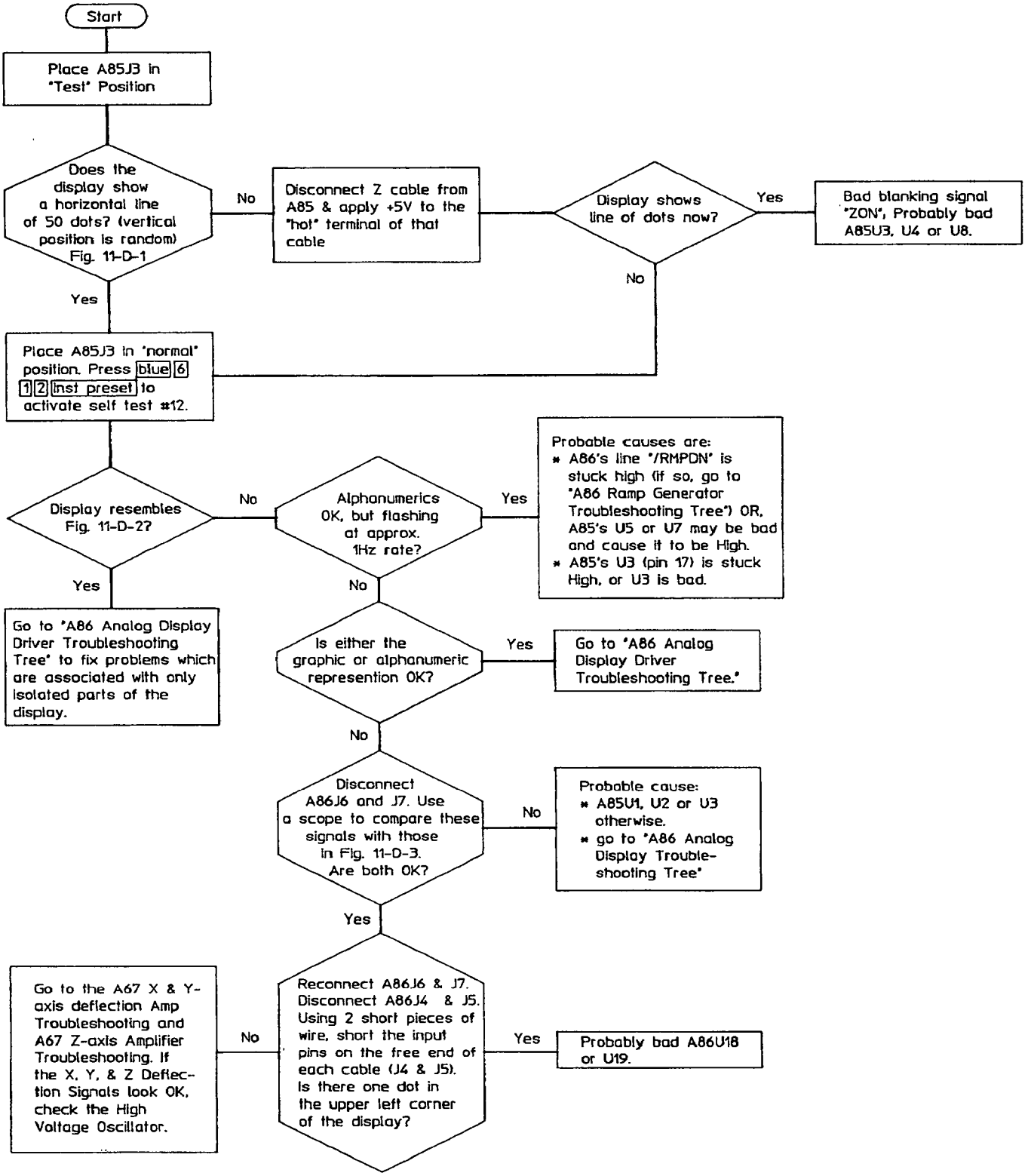


**Main Display Troubleshooting Tree**

# SERVICE GROUP D-1
# CLOCK

## Board Number A82
## HP Part Number 03585-66582

**INDEX:**



**ADJUSTMENTS:**

None

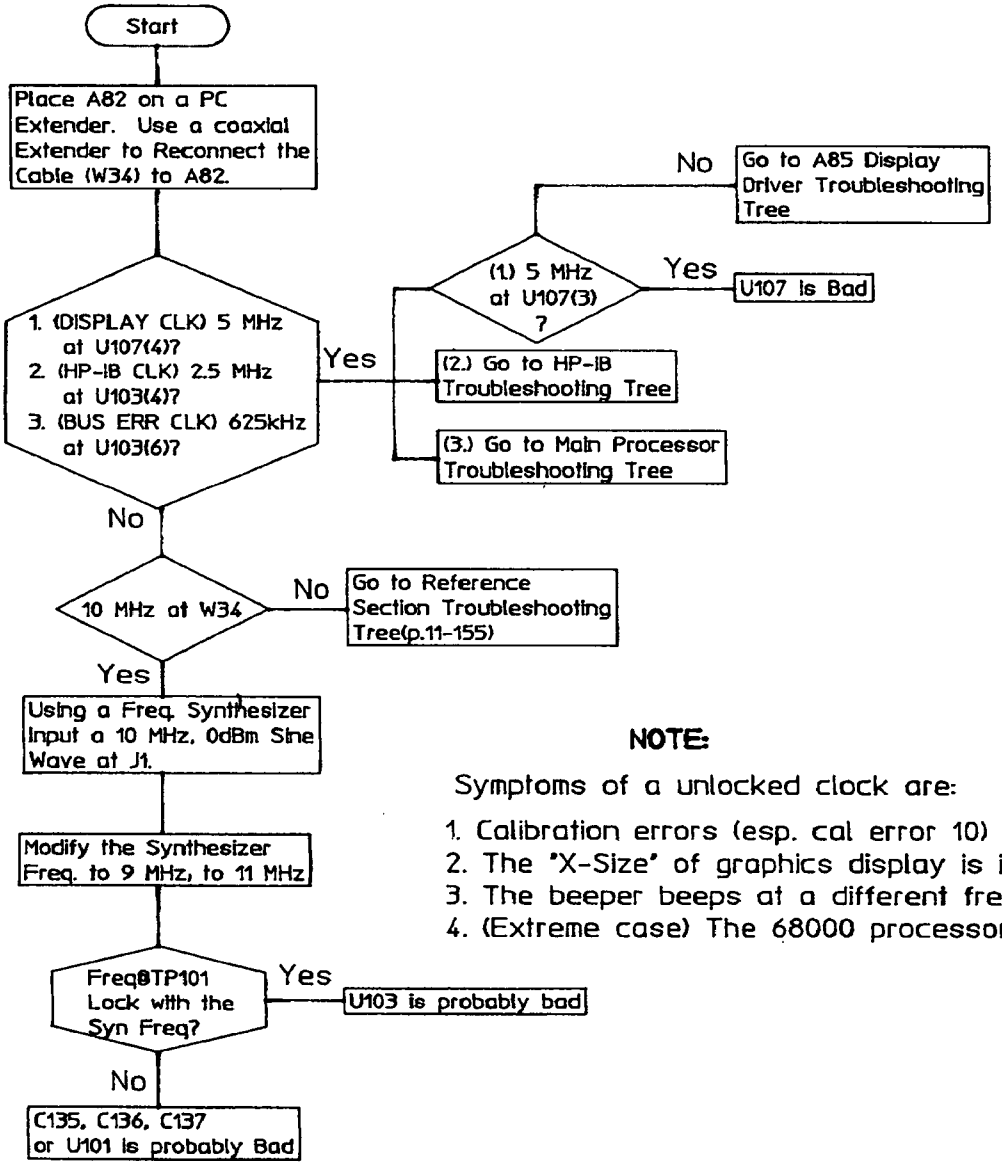


**NOTE:**

Symptoms of a unlocked clock are:

1. Calibration errors (esp. cal error 10)
2. The "X-Size" of graphics display is incorrect
3. The beeper beeps at a different frequency
4. (Extreme case) The 68000 processor won't run reliably

**A82 Clock Generator Troubleshooting Tree**

# SERVICE GROUP D-2

## DISPLAY MEMORY ADDRESS/DATA TESTS

### Board Number A85

### HP Part Number 03585-66585

**INDEX:**



**ADJUSTMENTS:**

| Component | Adjusted Parameter | Paragraph No. |
|---|---|---|
| A85 R2 | Pulse Width | 5-10 |

## Display Memory Address Test

This test will verify that the correct display address is going out of the address bus and into RAM.

1. Place A82 on an extender.

2. Close A83 SW101 positions 6, 3, 1.

3. Set the signature analyzer for:

   START ..... A82 U16(12) high-going
   STOP ..... A82 U14(7) high-going
   CLOCK ..... A82 U14(18) high going
   GROUND ..... A82 TP1

4. Turn on the 3585.

5. Verify the +5V signature (at, for example, U14(20)) is "9FA8".

6. The following A82 board signatures will verify that the address is going out of the bus and into RAM so that the display data will go to the A85 board.

| U13 Pin | U17 Pin | Signature | U14 Pin | U17 Pin | Signature |
|---|---|---|---|---|---|
| 1 | 10 | 6H60 | 1 | 25 | 0059 |
| 2 | 9 | P44F | 2 | 24 | 5240 |
| 3 | 8 | AOHA | 3 | 21 | 7C94 |
| 4 | 7 | O291 | 4 | 23 | 6U36 |
| 5 | 6 | 53C4 | 5 | 2 | 6567 |
| 6 | 5 | 7C26 | 6 | 26 | 6O4U |
| 7 | 4 | PU6U | 7 | 1 | 62HC |
| 8 | 3 | A54C | | | |

7. If any of the above signatures are incorrect, then move the signature analyzer's clock to U14(9).

8. Recycle power. Verify that the following A82 signatures are correct:

| U15 Pin | U17 Pin | Signature | U16 Pin | U17 Pin | Signature |
|---|---|---|---|---|---|
| 18 | 10 | 6H60 | 18 | 25 | 0059 |
| 17 | 9 | P44F | 17 | 24 | 52H0 |
| 16 | 8 | AOHA | 16 | 21 | 7C94 |
| 15 | 7 | O291 | 15 | 23 | 6U36 |
| 14 | 6 | 53C4 | 14 | 2 | 6567 |
| 13 | 5 | 7C26 | 13 | 26 | 6O4U |
| 12 | 4 | PU6U | 12 | 1 | 62HC |
| 11 | 3 | A54C | | | |

9. If these signatures are correct, then the problem is probably U13 or U14.

## Display Memory Data Test

This test verifies that the DMA data latch (A85U1, U2) and A82 U19-U22 are operating correctly.

1. Place the A85 board on an extender.
2. Close A83 SW101 positions 6,3,2.
3. Set the signature analyzer for:

   START/STOP ..... A82 TP4 both high-going
   CLOCK ..... A85 U1(11) high-going
   GROUND ..... A82 TP1

4. Turn on the 3585.
5. Using a frequency counter, do you measure 5MHz at A85 TP3? If not, then go to the Clock Generator Troubleshooting Tree.
6. Verify that the +5V signature at A85 U1(20) is "C349."
7. Verify the following A85 (DMA data latch output) signatures:

| U1 pin | Signature | U2 pin | Signature |
|---|---|---|---|
| 2 | 8C72 | 2 | APPC |
| 5 | 74P3 | 5 | UP12 |
| 6 | 48H8 | 9 | 3UHF |
| 9 | 0639 | 12 | AAH7 |
| 12 | C576 | 15 | OU85 |
| 15 | 69HP | 16 | P71F |
| 16 | F6F9 | 19 | U3C2 |
| 19 | P112 | | |

8. If the above signatures are incorrect, then take the A85 board off of the extender. Place A82 on the extender and move the signature analyzer clock to A82 U19(11).
9. The +5V signature at A82 U19(20) should be "C349." If not, then the +5V, A82 U21 or U22 may be faulty. If the +5V signature is correct, then continue with step nine.

10. Verify the following A82 signatures:

| U19 pin | Signature | U20 pin | Signature |
|---|---|---|---|
| 19 | 8C72 | 19 | APPC |
| 18 | 74P3 | 18 | UP12 |
| 17 | 48H8 | 17 | ACAU |
| 16 | 0639 | 16 | 3UHF |
| 15 | C576 | 15 | AAH7 |
| 14 | 69HP | 14 | OU85 |
| 13 | F6F9 | 13 | P71F |
| 12 | P112 | 12 | U3C2 |

11. If the signatures are incorrect, then verify the following signatures (at the inputs of U19 and U20):

| U19 pin | Signature | U20 pin | Signature |
|---|---|---|---|
| 2 | 16P4 | 2 | 5HH7 |
| 3 | P9F7 | 3 | UF24 |
| 4 | 91CO | 4 | 575U |
| 5 | OF72 | 5 | AA63 |
| 6 | 6APH | 6 | 8075 |
| 7 | H3CH | 7 | FAHO |
| 8 | 8H92 | 8 | FP38 |
| 9 | F224 | 9 | P764 |

12. If the signatures are good, then replace U19 (or U20, respectively).

13. If the U19 signatures are bad, then replace U21. If the U20 signatures are bad, then replace U22.

# SERVICE GROUP D-3
# ANALOG DISPLAY DRIVER

**Board Number A86**
**HP Part Number 03585-66586**

**INDEX:**



**Adjustments:**

| Component | Adjusted Parameter | Paragraph No. |
|---|---|---|
| A86 R36 | Alpha Y Gain | 5-12 |
| A86 R40 | Alpha Offset | 5-12 |
| A86 R41 | X Gain | 5-12 |
| A86 R72 | X Alpha Offset | 5-12 |

Press Blue 6 1 2 Preset in all of the figures, below

(A86J2 in "Test")

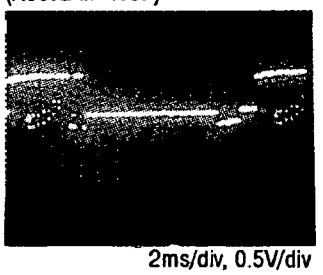

2ms/div, 0.5V/div

**Figure 11-D-3-20**

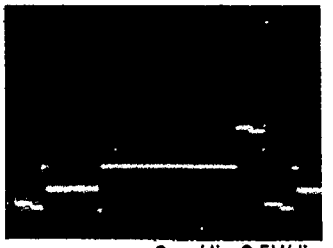

2ms/div, 0.5V/div

**Figure 11-D-3-9**

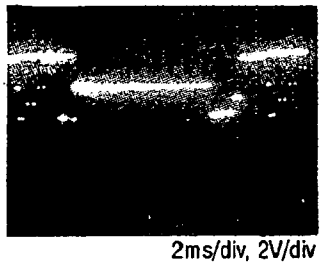

2ms/div, 2V/div

**Figure 11-D-3-7**

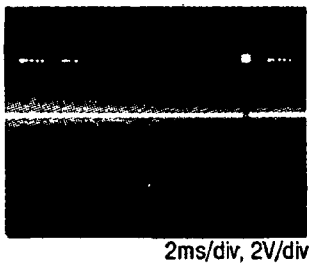

2ms/div, 2V/div
U13(9)

**Figure 11-D-3-16A**

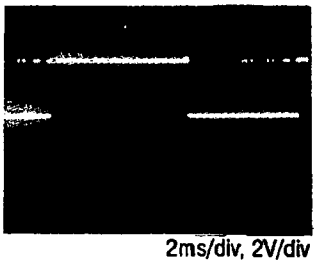

2ms/div, 2V/div
U13(10)

**Figure 11-D-3-16B**

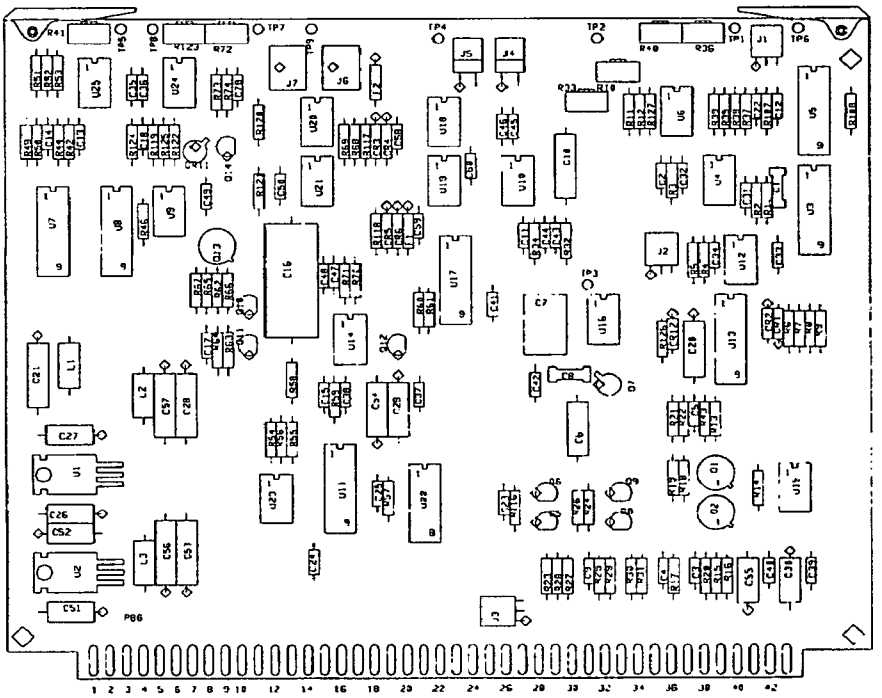

**A86**
**03585-66586**

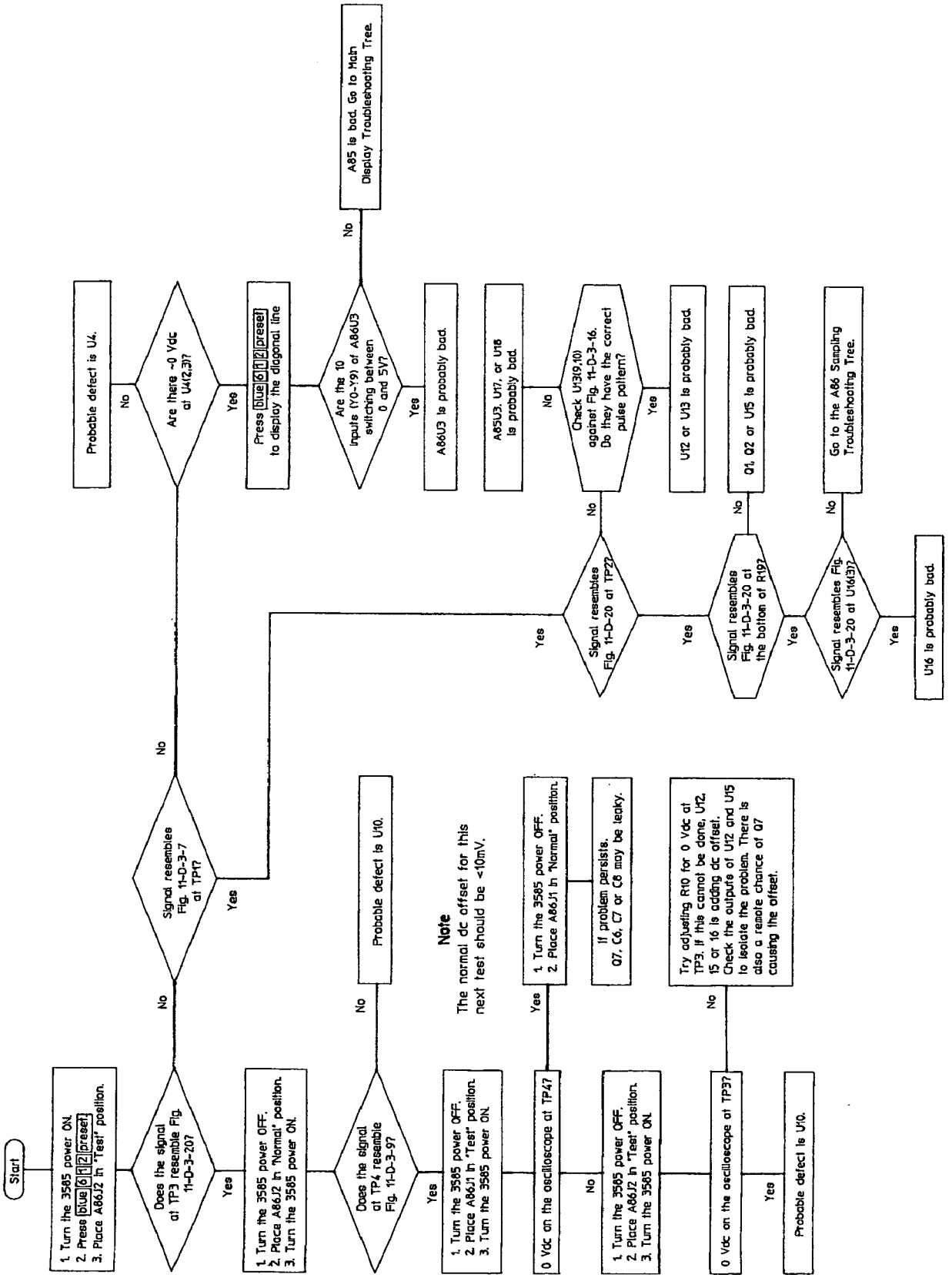


**A86 Y-Axis Line Drawer Troubleshooting Tree**

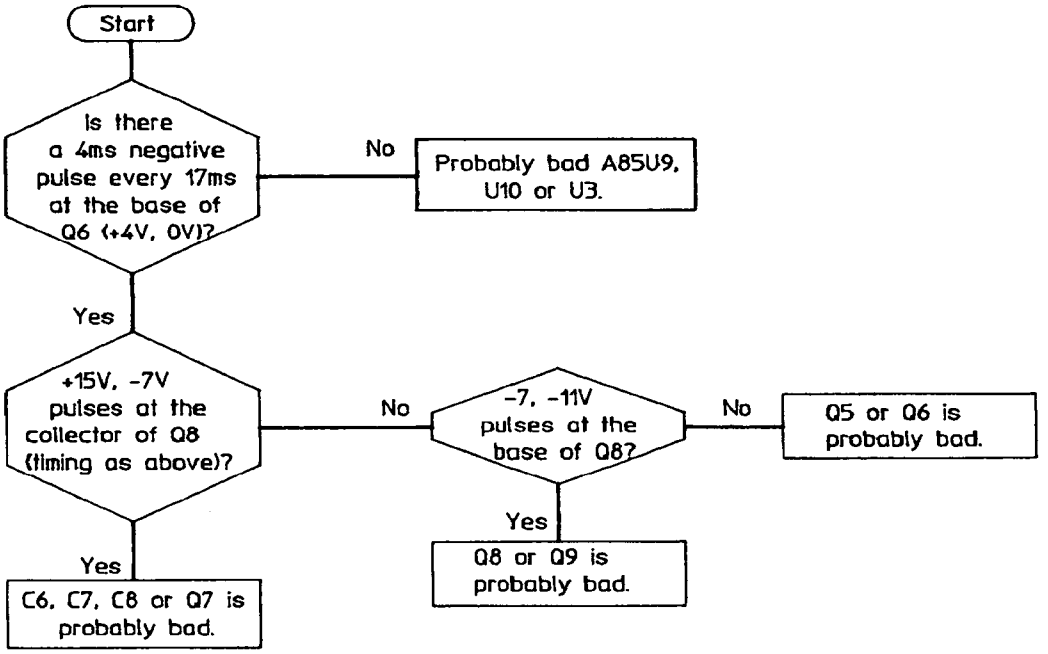


**A86 Sampling Troubleshooting Tree**

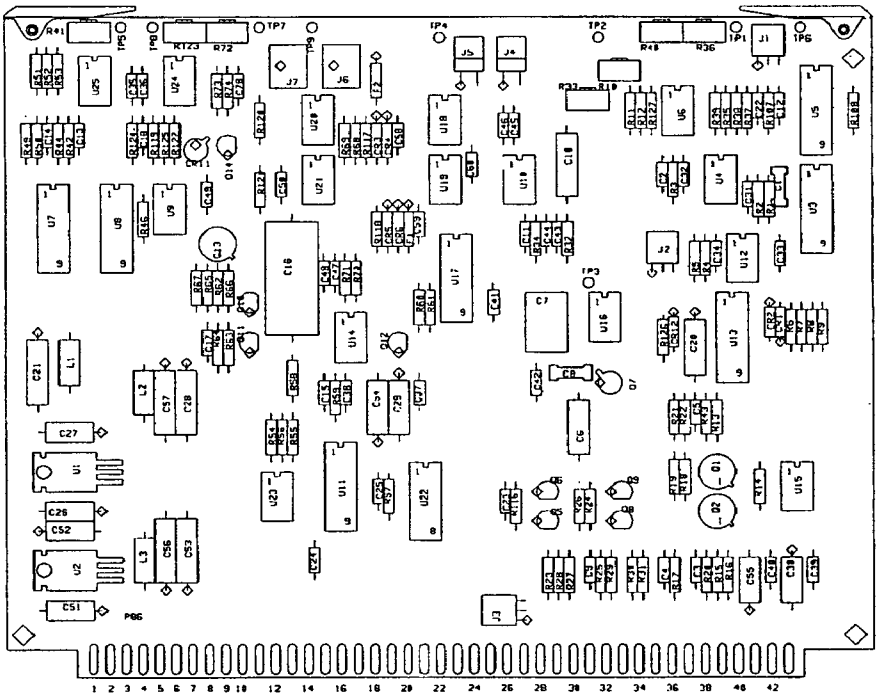

**A86**
**03585-66586**

Press Blue 6 1 2 Preset

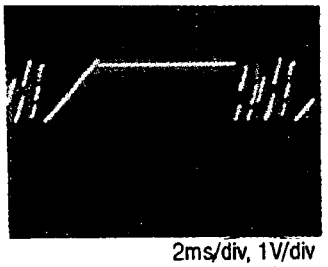

2ms/div, 1V/div
(A86U18(6))

**Figure 11-D-3-2**

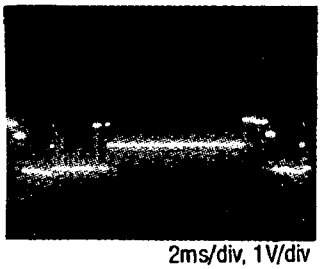

2ms/div, 1V/div
(A86U19(6))

**Figure 11-D-3-3**

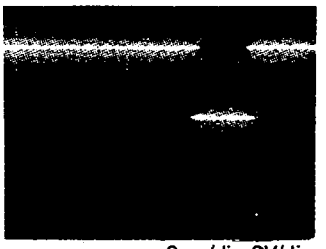

2ms/div, 2V/div
(A86U17(1))

**Figure 11-D-3-4**

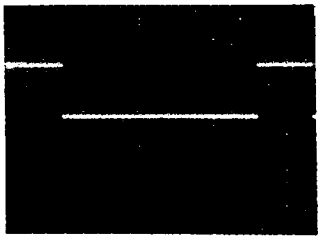

2ms/div, 2V/div
(A86U17(16))

**Figure 11-D-3-5**

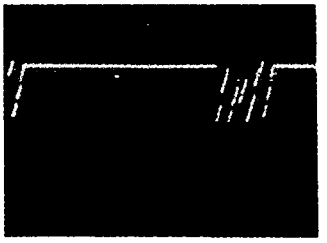

2ms/div, 1V/div
(A86TP5)

**Figure 11-D-3-6**

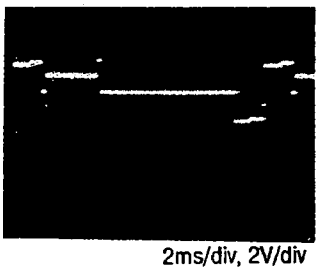

2ms/div, 2V/div
(A86TP1)

**Figure 11-D-3-7a**

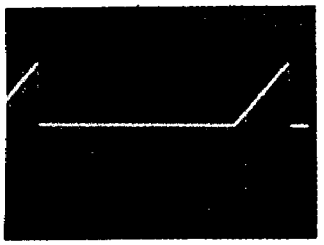

2ms/div, 1V/div
(A86TP7)

**Figure 11-D-3-8**

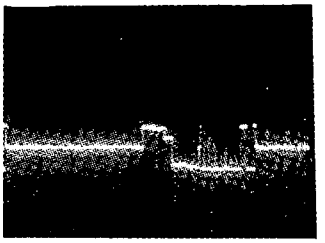

2ms/div, 1V/div
(A86TP4)

**Figure 11-D-3-10**

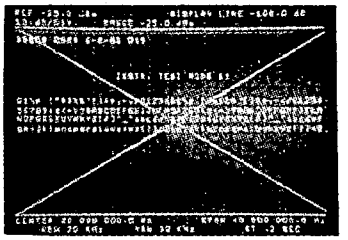

(Press Blue 6 1 1 Preset)

**Figure 11-D-3-11**

2ms/div, 2V/div

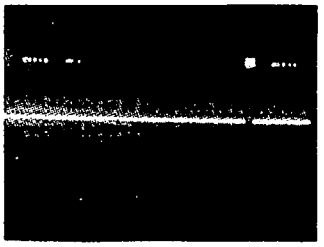

Figure 11-D-3-16A

2ms/div, 2V/div

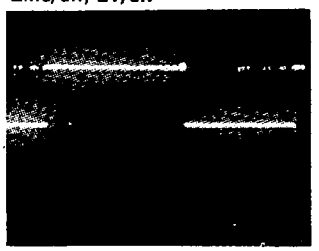

Figure 11-D-3-16B

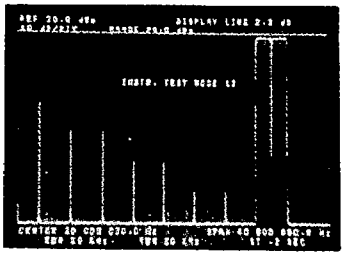

Figure 11-D-3-17

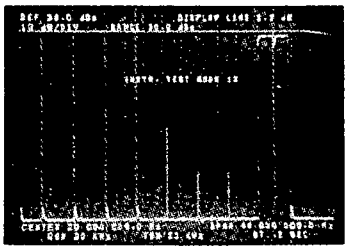

Figure 11-D-3-18A

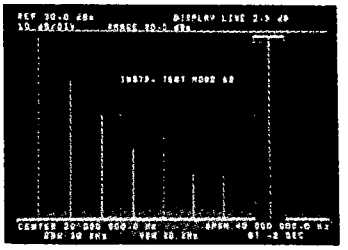

Figure 11-D-3-18B

2ms/div, 1V/div

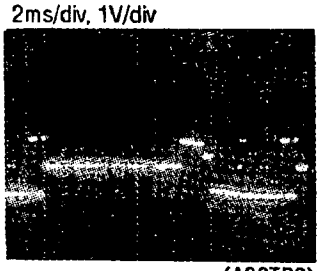

(A86TP6)

Figure 11-D-3-23

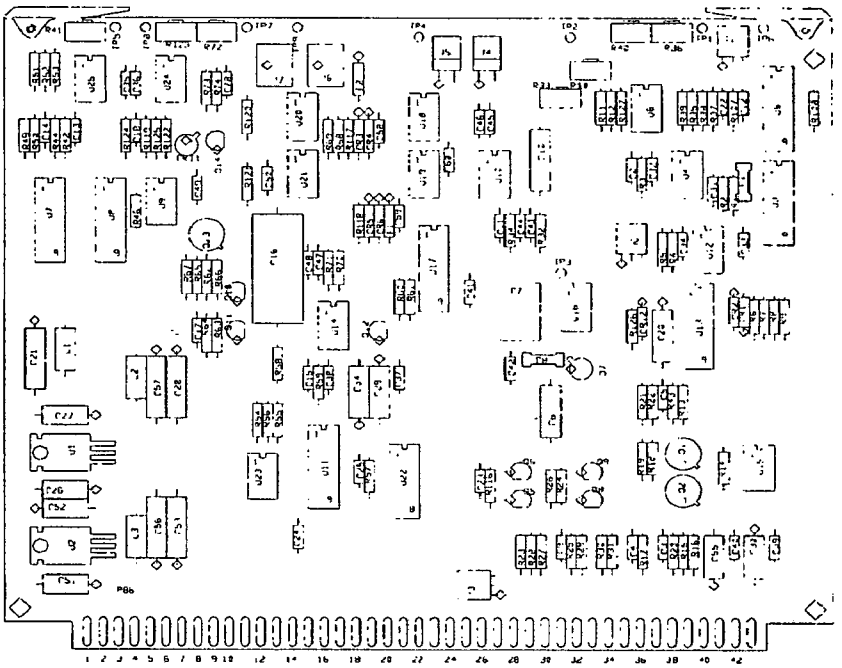

A86
03585-66586

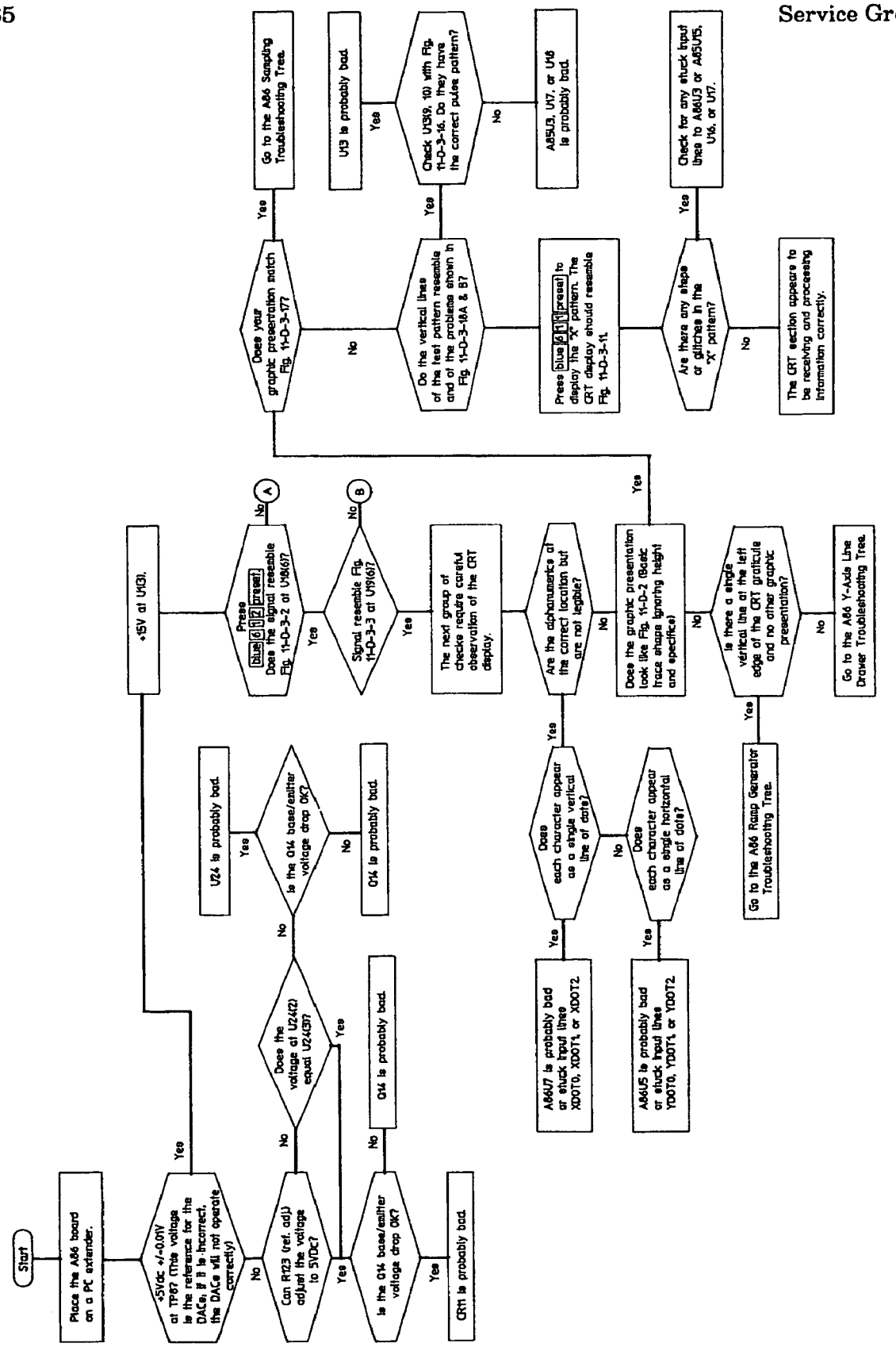


**A86 Analog Display Driver Troubleshooting Tree (Part 1)**

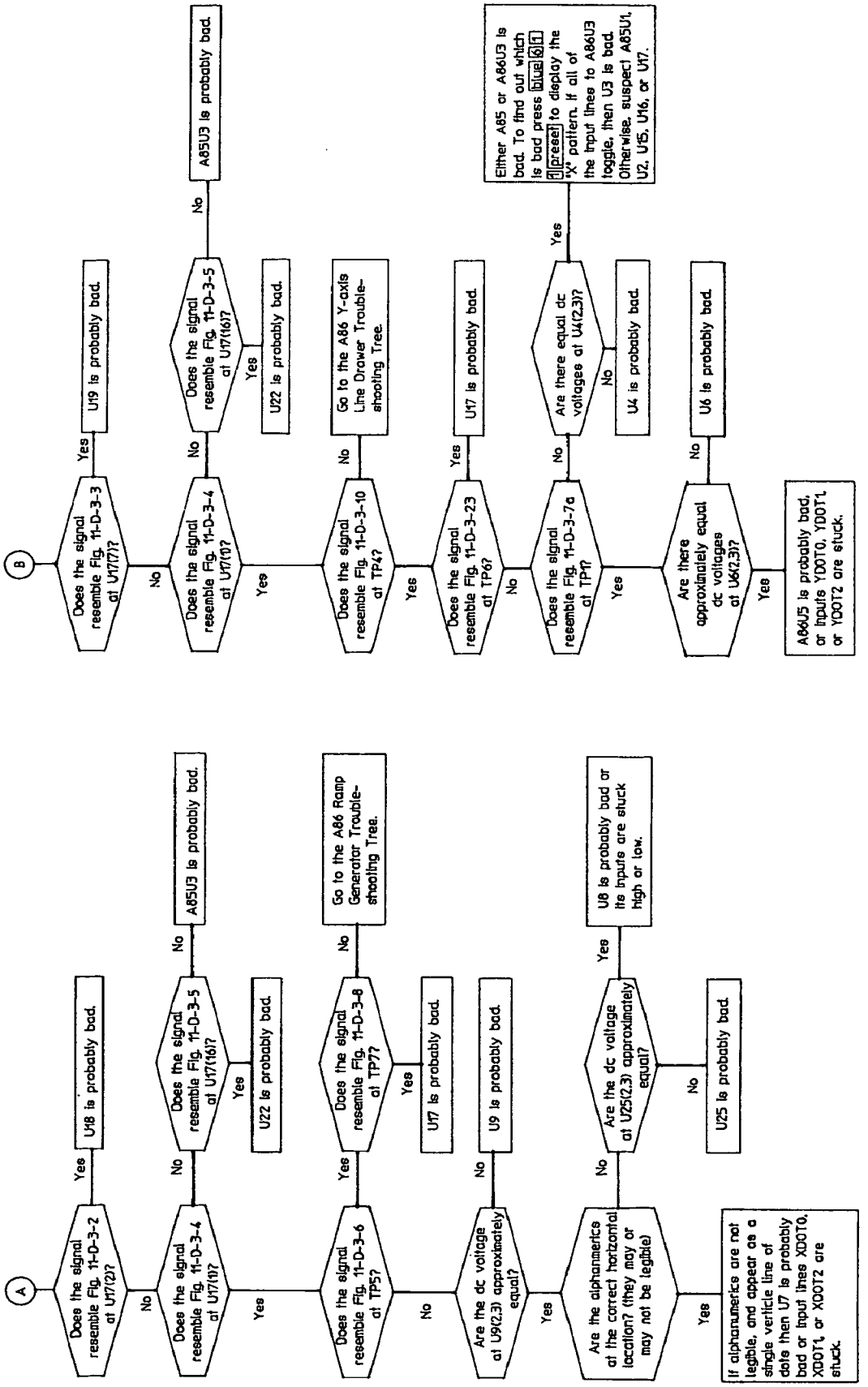


**A86 Analog Display Driver Troubleshooting Tree (Part 2)**

2ms/div, 2V/div

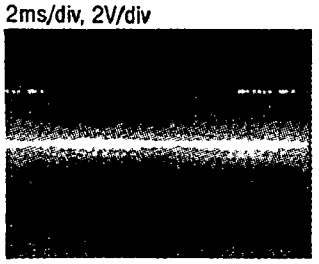

Figure 11-D-3-21

5ms/div, 2V/div

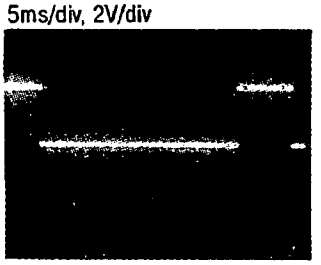

Figure 11-D-3-22

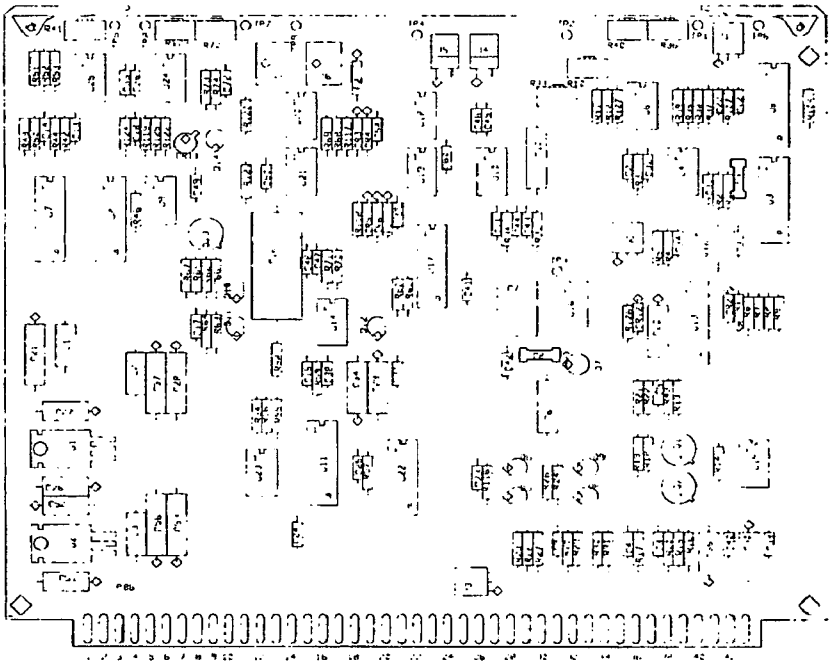

A86
03585-66586

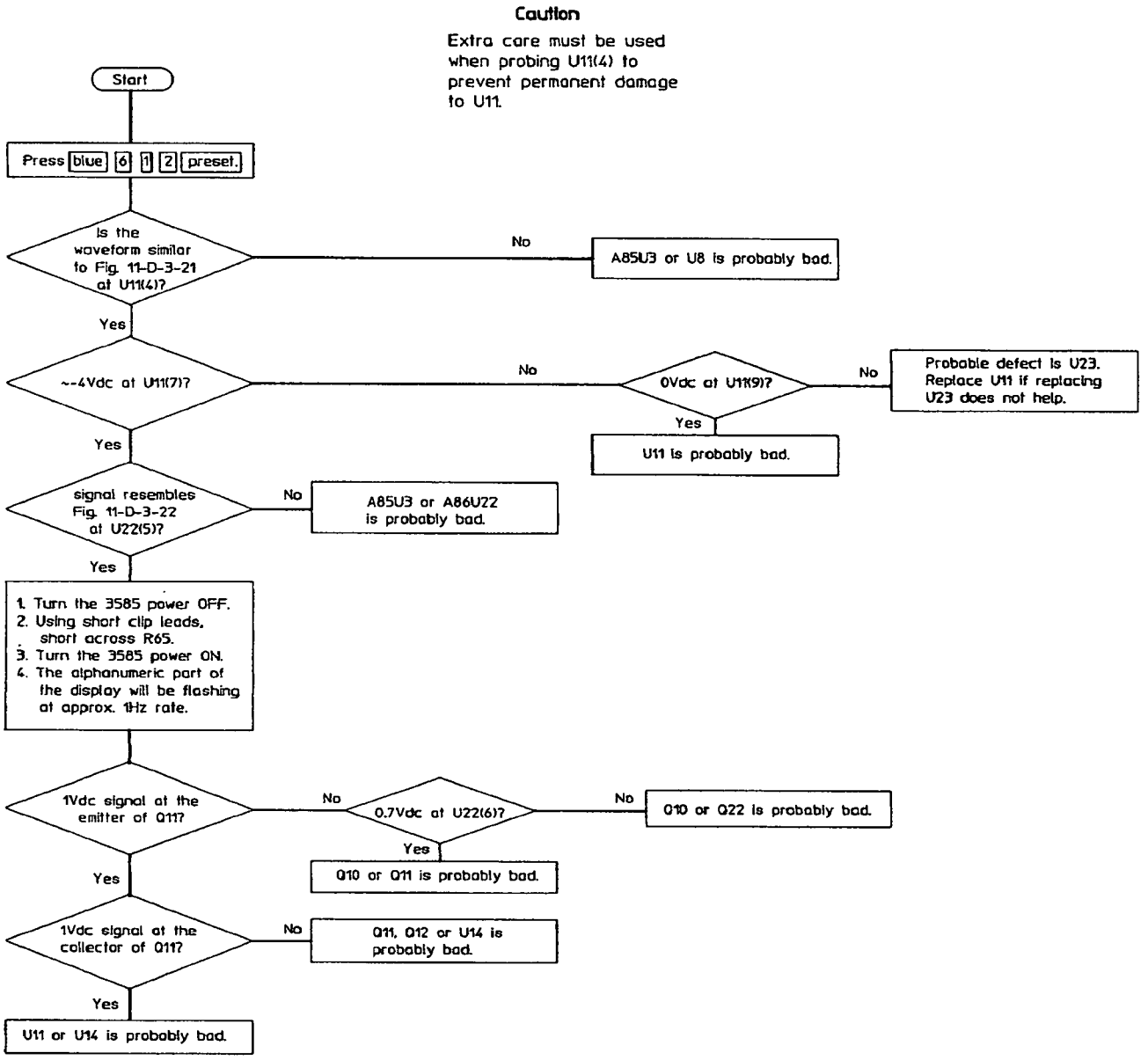


**A86 Ramp Generator Troubleshooting Tree**

# SERVICE GROUP D-4
# XYZ AMPLIFIERS

## Board No. A67
## Part Number 03585-66567

### INDEX:



### ADJUSTMENTS:

| Component | Adjusted Parameter | Page No. |
|---|---|---|
| A67R1 | Trace Align | 5-11 |
| A67R2 | Orthoganality | 5-11 |
| A67R3 | Pattern | 5-11 |
| A67R6 | Intensity Limit | 5-10 |
| A67R38 | 100V Regulator | 5-10 |
| A67R46 | High Voltage (−4kV) | 5-10 |
| A67R54 | X-gain | 5-11 |
| A67R59 | X-position | 5-11 |
| A67R80 | Y-gain | 5-11 |
| A67R85 | Y-position | 5-11 |
| A67R105 | Flood gun grid | 5-10 |
| A67R116 | Graticule Illumination Maximum | 5-10 |
| A65R13 | Focus Limit | 5-10 |

### TROUBLESHOOTING NOTES:

**WARNING**

*Voltages in excess of 150Vdc are exposed on the A67 board. Contact with these voltages can cause physical injury or death.*

*The A65 board contains voltages in excess of −4kV. Physical injury or death can result if contact is made with the A65 board* **even when the line switch is OFF.**

**WARNING**

*When disconnecting the CRT's anode cable (red) the full − 18kV can remain on the cable even when the LINE switch is set to OFF. Physical injury or death may result if either end of this cable is contacted. Always ground the ends of this cable* **immediately after disconnecting it.**

1. Due to the difficulty of troubleshooting the High Voltage board (A65), it is recommended that the entire board be replaced. The part number for the entire board, including cables and high voltage multiplier is 03585-64201.

### A67 X and Y-axis Deflection Amplifiers.

1. Check the input signal for Q14, Q24 (see schematic for oscilloscope photographs).

2. Check for a signal identical to the input on the emmitters of Q14A, 24B. A lack of signal may be due to the current sources CR20, 23; Q15, 25 or Q14, 24.

3. If no signal is present at the X1, X2 or Y1, Y2 outputs then use the schematic to check the dc voltages within the Deflection Amplifiers. Especially check the base-to-emitter drops of the transistors.

### A67 Z-axis Amplifier.

1. Check the input signal for Q2 (see schematic for oscilloscope photographs).

2. Set the front panel INTENSITY control at 10 o'clock and check for ≈0.12Vp-p square wave at the emitter of Q1.

3. Vary the INTENSITY control, this should cause the dc level of the square wave to vary.

4. If no signal is present at TP5 then place J11 in the "Test" position. Adjust the INTENSITY control so that the base of Q3 equals −7Vdc. Now use the schematic to check the dc voltage conditions on Q1, 5-8.

### 100V Regulator.

1. Check for ≥115V at the collector of Q11. F1 on the A75 Power Supply Control Board, may be removed to check the input voltage if Q11 is suspected of loading.

2. Using the voltages given on the schematic check U3, CR10, 11, 12 and Q11, 12. Note that the voltage may be checked relative if the voltage at TP2 is wrong. If the output voltage is low, suspect CR12 or C46 of being shorted.

### A67 High Voltage Oscillator.

1. Check the 18V supply fuse A67F1. If it is open, check to see if Q35 or CR27 is shorted. If Q35 and CR27 are OK, replace the fuse and continue.

2. Is U2(6) ≥7Vdc.

   a. If the voltage is ≥7Vdc, check Q13. If Q13 is good replace the A65 board.

   b. If the voltage is <7Vdc or negative go to step 3.

3. Check the anode of CR13 for 38Vdc. A lack of the proper voltage indicates a problem with CR13, 29, Q4 or the switch.

4. Check U2(3) for 0Vdc. If U2(3) is not equal to 0Vdc check for ≈0Vdc at the anode of CR14.

a. ≈0Vdc at the anode of CR14 indicates a probable defect of U2.

b. A voltage at the anode of CR14 indicates problems on the A65 board.

### A67 CRT Adjustments.

The adjustments for the CRT are relatively minor circuits composed of variable resistors and zener diodes. Use the schematic and the listed voltages to troubleshoot these circuits.

### CRT Replacement Procedure.

a. Unplug ac power from the 3585 and remove the top cover.

b. Remove the plastic trim strips from the top and left side of the instruments front frame.

c. Locate and remove the two screws beneath the bottom edge of the CRT bezel (see Figure 11-D-4-1).

d. Remove the inner portion of the CRT bezel and the plastic faceplate over the CRT face.

e. Remove the first, third and fifth screws from the top of the instrument's front frame.

f. Apply gentle pressure to the back of the front panel. The top of the front panel will swing out toward you.

g. Remove the ribbon cable from the back of the front panel and set the front panel aside.

h. Place the instrument on its right side and remove the bottom cover.

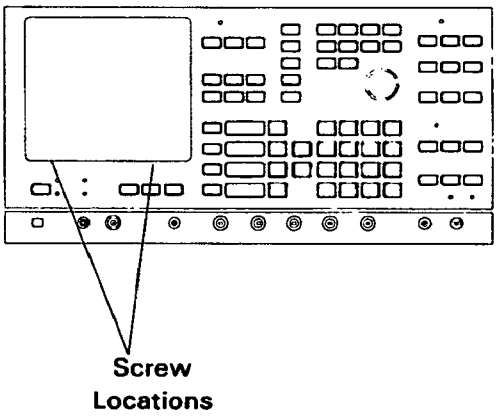


**Figure 11-D-4-1. CRT Bezel Screw Location**

**WARNING**

*The CRT anode retains a large portion of the −18kV voltage even when the LINE voltage is OFF. Physical injury or death can result if this voltage is contacted.*

i. Disconnect the CRT anode (red) cable. As soon as it is disconnected touch the end connected to the CRT to the chassis. This will short the static charge on the CRT to ground.

**WARNING**

*Do not at any time touch the screwdriver shaft while discharging the high voltage supply. Serious physical injury or death may result.*

j. Place the metal shaft of an insulated screwdriver against the instruments frame. CAREFULLY place the end of the screwdriver inside the High Voltage. Supply portion of the CRT anode cable until it reaches the bottom of the cable connector. Hold the screwdriver in place for 10 seconds.

k. Loosen the four screws shown in Figure 11-D-4-2. Swing the High Voltage box away so that the bottom CRT neck pins are exposed.

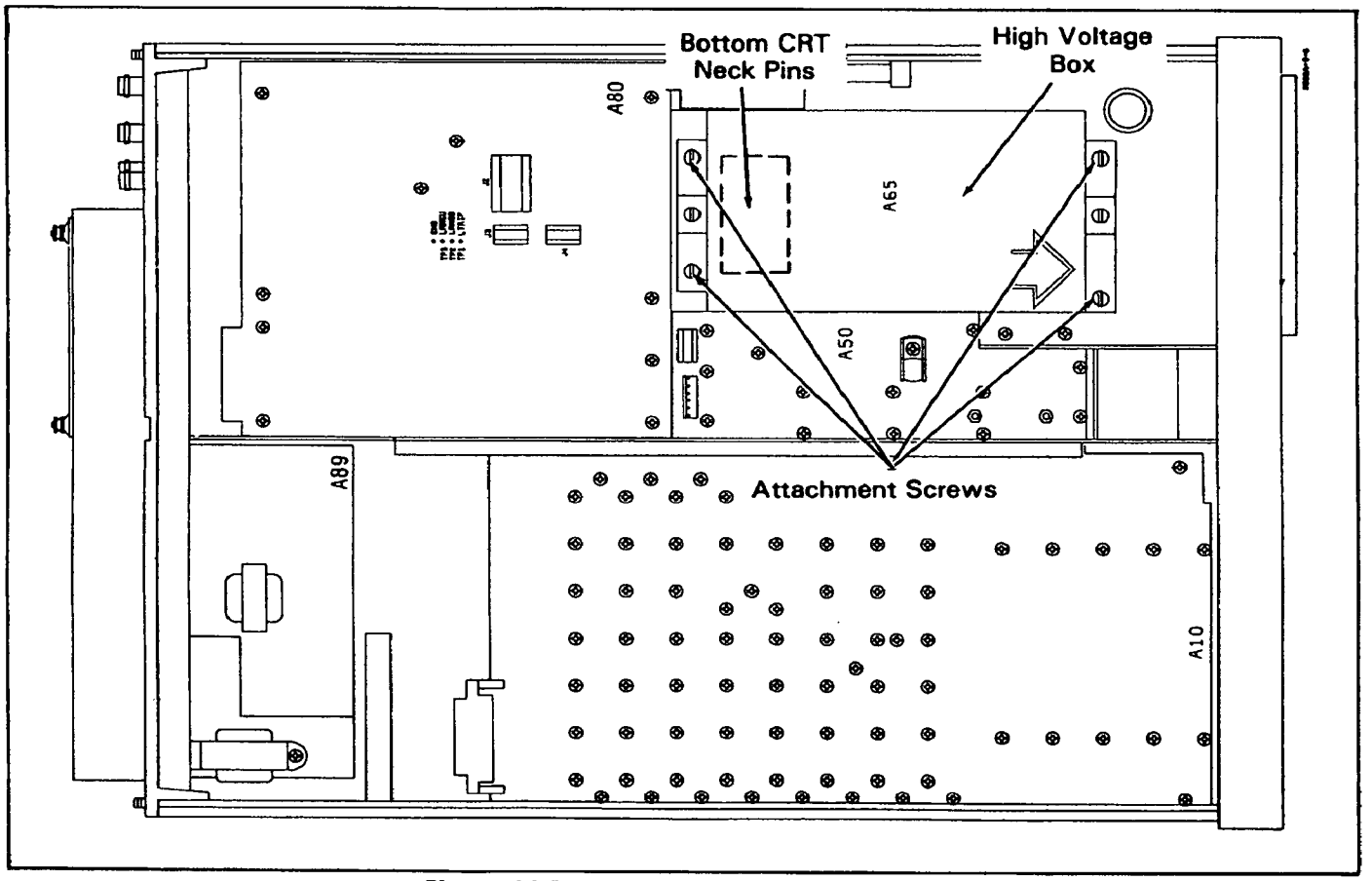


**Figure 11-D-4-3. High Voltage Box Removal**

l. Remove the Bottom CRT neck pins.

m. Remove the Top CRT neck pins.

n. Remove the protective plastic cover over the A67 board (see Figure 11-D-4-3).

o. Remove the two screws which hold the CRT neck clamp (see Figure 11-D-4-3).

p. Remove the four screws which hold the CRT bezel. Two of the screws are located on the left side of the front frame, one on the top of the front frame and one below the lower right corner of the CRT bezel.

q. Carefully slide about 1/3 of the CRT out the front frame. Disconnect the rear CRT connector. The CRT is now free to remove from the instrument.

r. Remove the CRT bezel from the CRT shield. The CRT bezel is friction fit onto the CRT shield, there are no attachment screws.

s. Remove the CRT from the CRT shield and replace it.

**NOTE**

*When replacing the CRT be sure that the foam rubber ring is placed in the proper position near the CRT rear connector.*

**NOTE**

*After the CRT is installed in the instrument remember to reconnect the black wire connected to the CRT shield to the CRT bezel mounting screw in the lower right corner.*

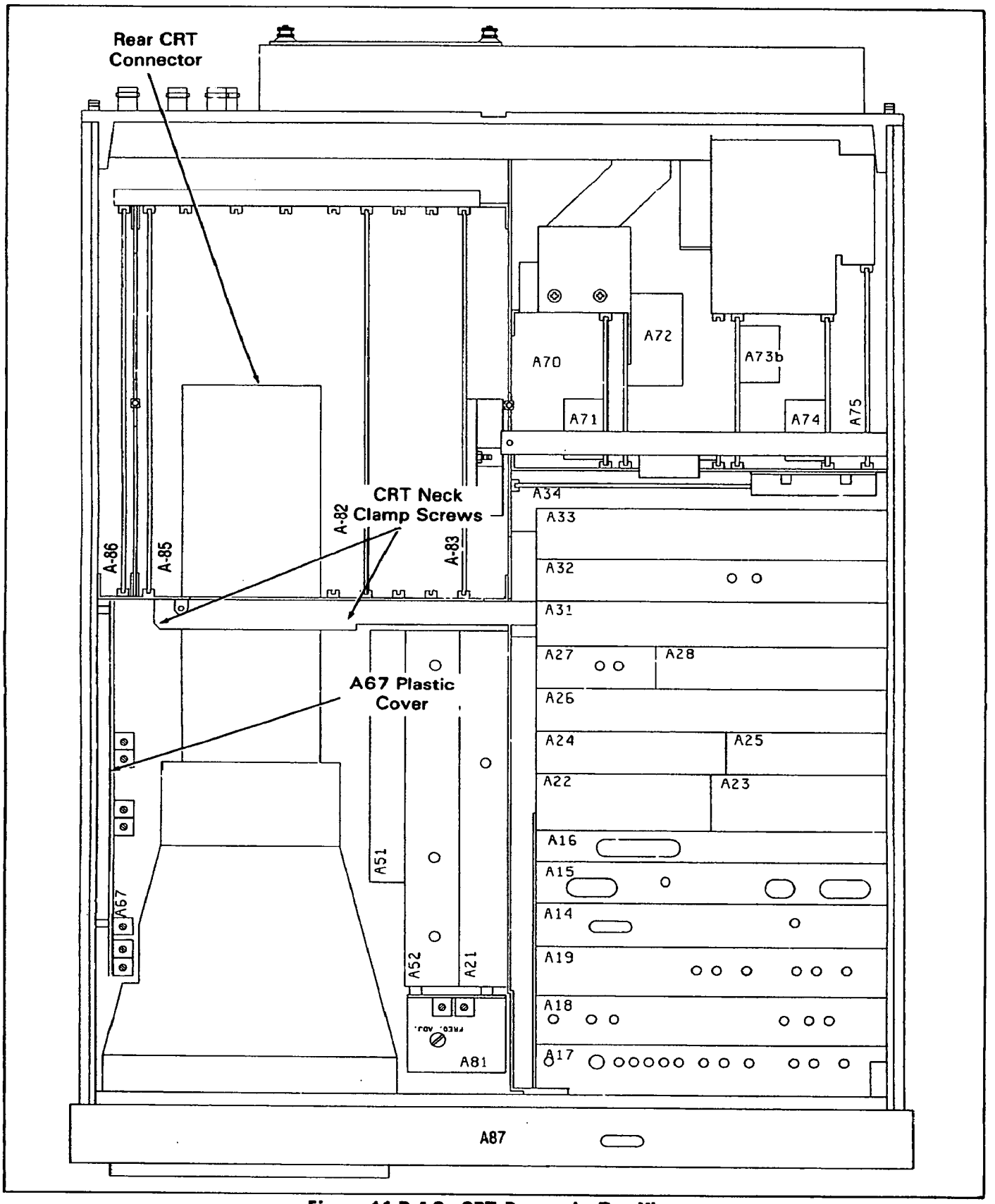


Figure 11-D-4-3. CRT Removal - Top View

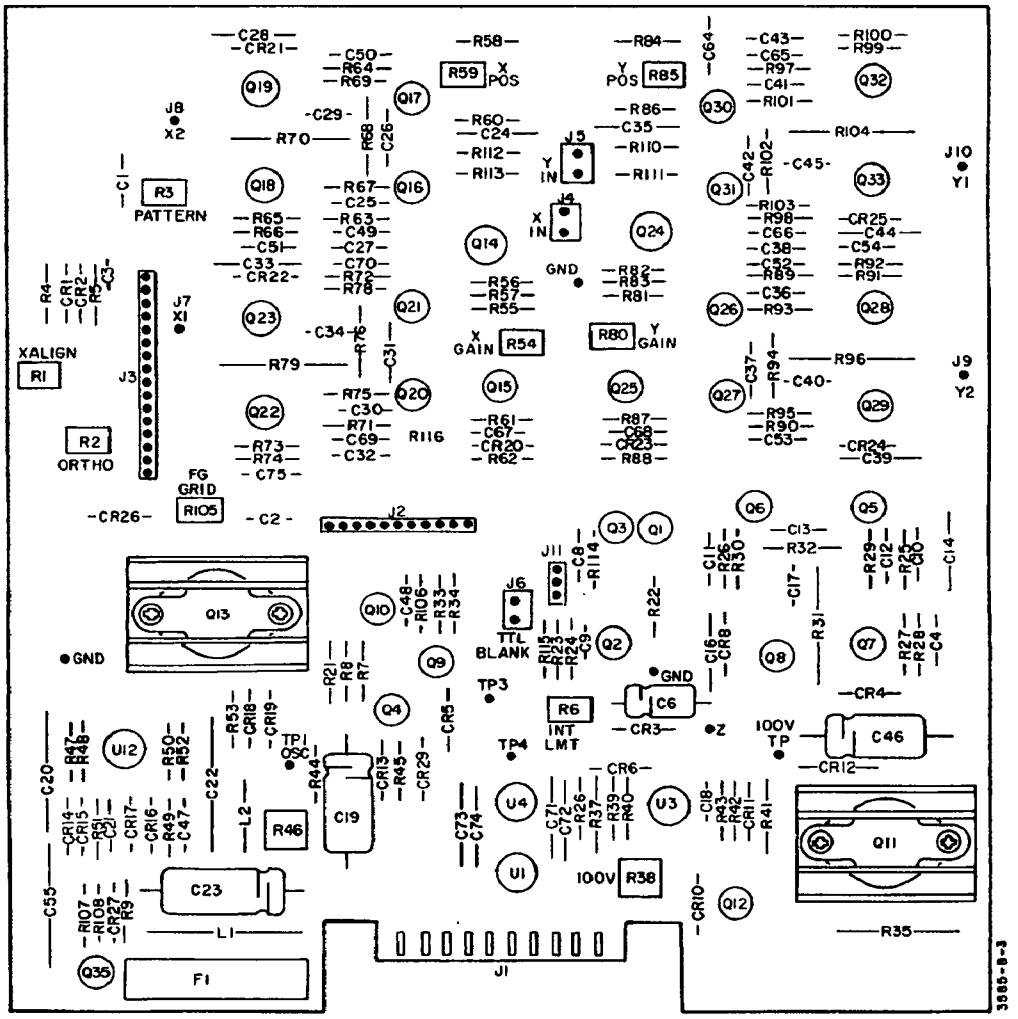


A67
03585-66567

# SERVICE GROUP E
# TRACKING GENERATOR

## Board No. A51-3
## Part Number 03585-66551 thru -66553

### INDEX:



### EQUIPMENT REQUIRED:

| Instrument | Required Characteristics | Recommended Model No. |
|---|---|---|
| Digital Voltmeter | 4½ Digits dc Accuracy ±0.05% ±3 Digits | HP 3466A |
| Oscilloscope | Bandwidth dc to 100MHz Vertical Sensitivity 0.005V/div. | HP 1740A |
| Spectrum Analyzer | Freq. Range 0.1 to 200MHz Amplitude Accuracy ±3dB | HP 8568B |
| Resistor Probe | 20:1 Resistive Divider, 1kΩ Resistance When Terminated in 50Ω. | HP 10020A |
| Digital Signature Analyzer | | HP 5006A |

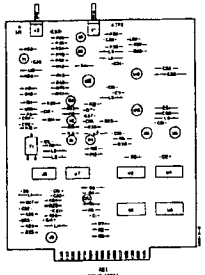

Figure 11-E-1. Shift 603

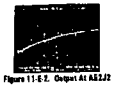

Figure 11-E-2. Output At A22J2

Figure 11-E-3. Course DC

Figure 11-E-4. Fine DAC

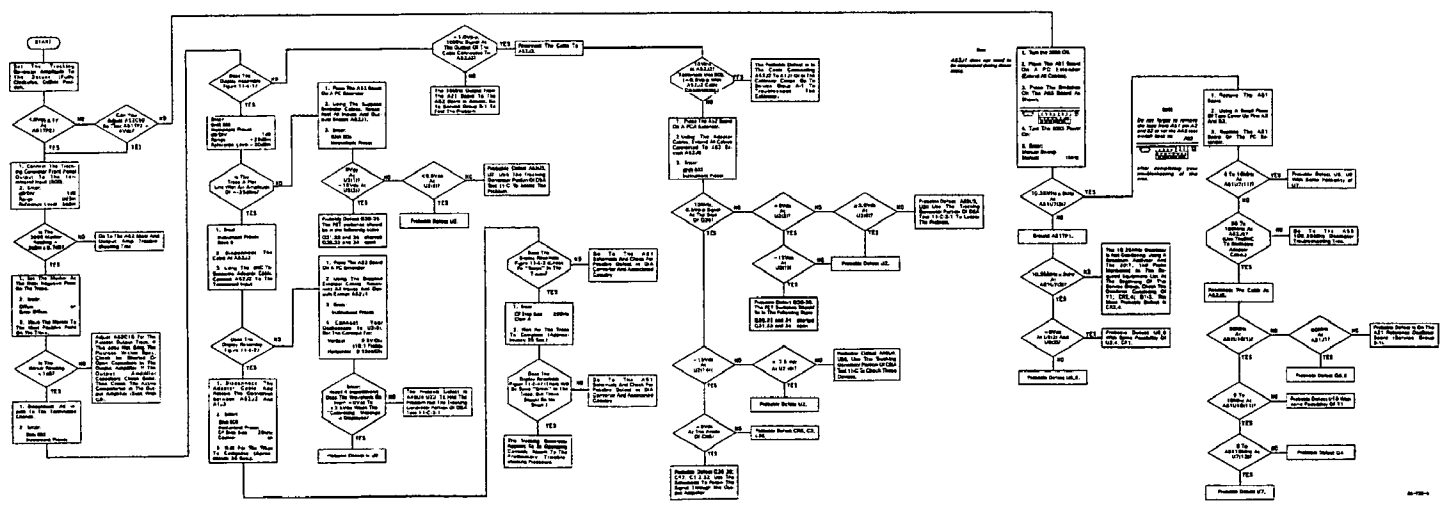

Main Tracking Generator Troubleshooting Tree

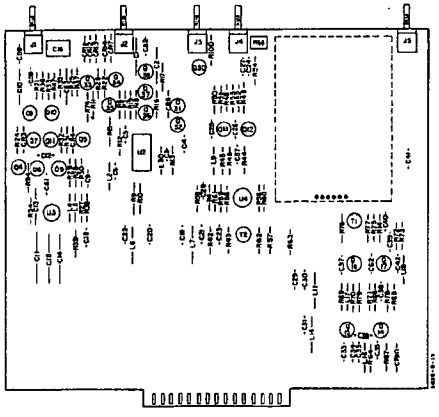

A52
03585-66552

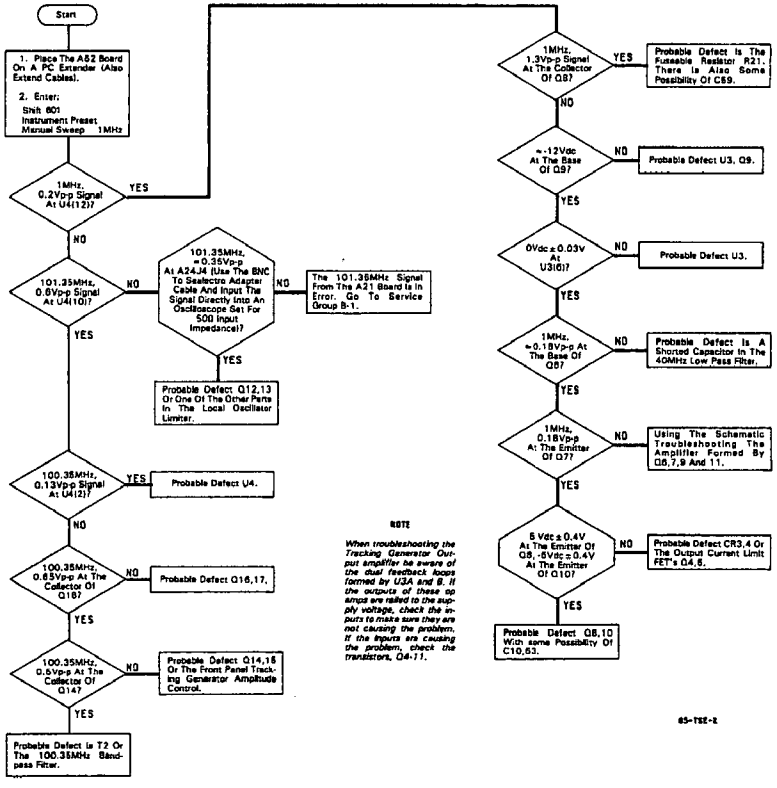


A52 Mixer and Output Amplifier Troubleshooting Tree
11-273/11-274

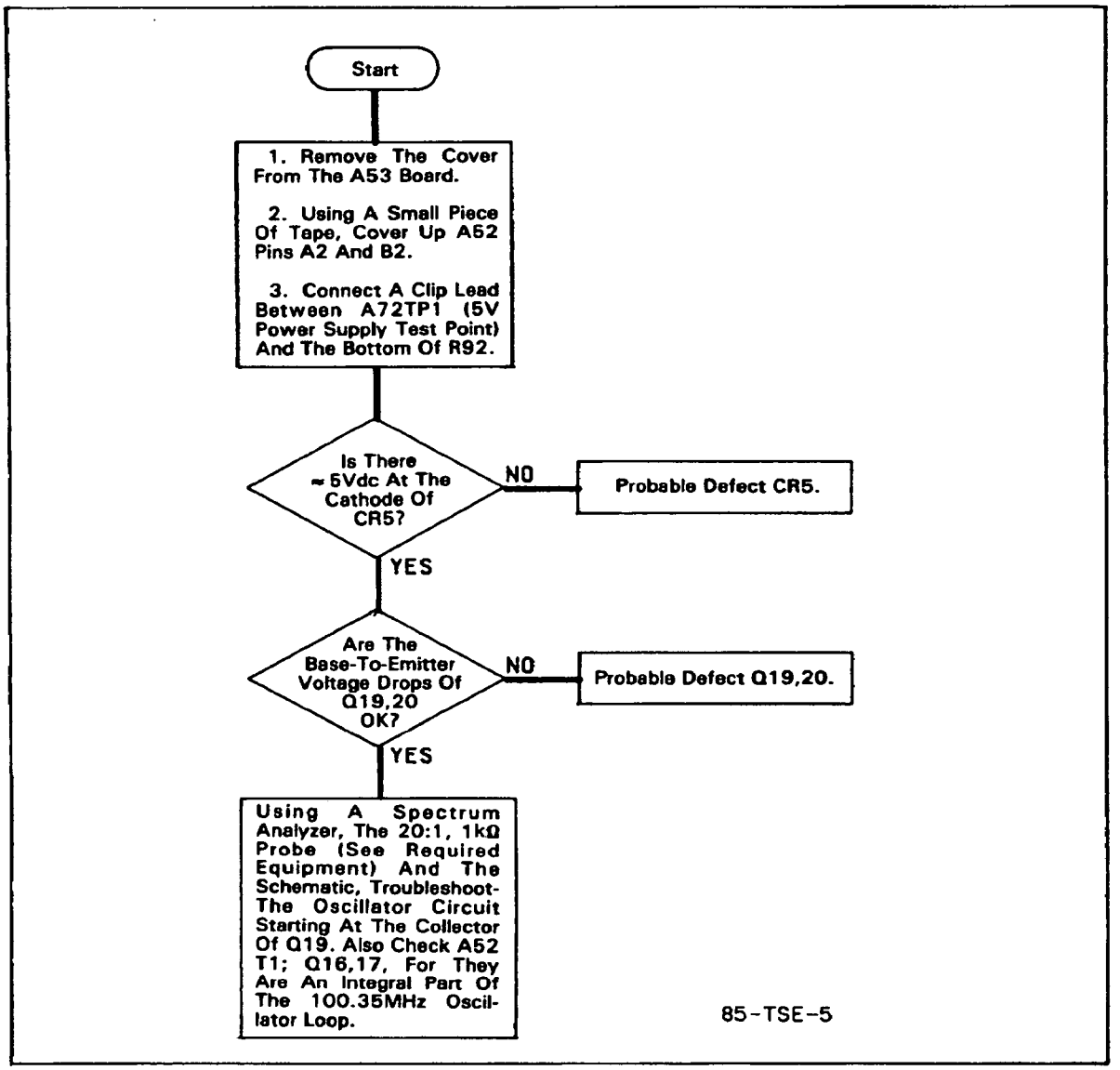


**A53 100.35MHz Oscillator Troubleshooting Tree**

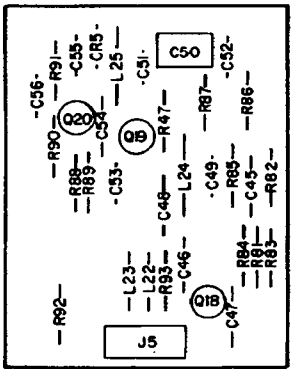


A53
03585-66553

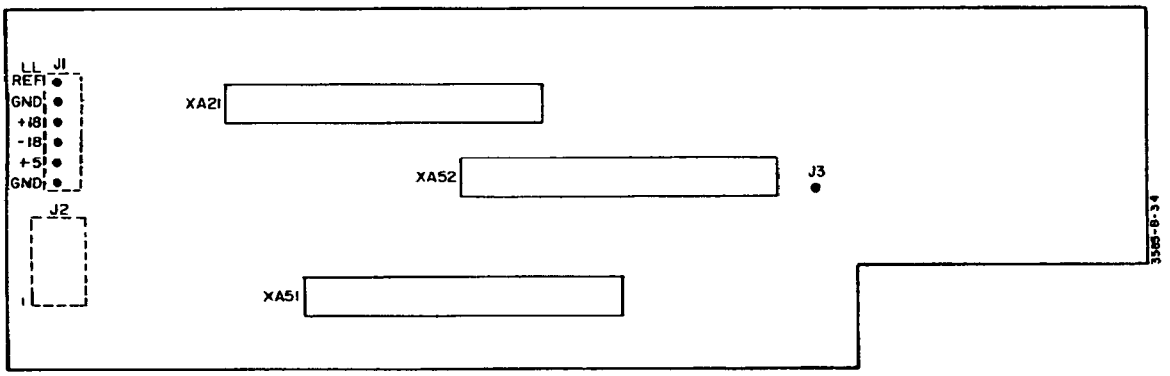


A50
03585-66550

# SERVICE GROUP F
# HP-IB

## Board Number A83

## HP Part Number 03585-66583

### INDEX:



### ADJUSTMENTS:

None

### TROUBLESHOOTING NOTES:

None

## TROUBLESHOOTING HP-IB FAILURES

1. Using a frequency counter, verify that the HP-IB clock (A83 TP101) measures 2.5MHz.

2. If TP101 has the incorrect frequency, check at U106(9). If the correct frequency appears here, then replace the opto-isolator, U107. If it does not, then go to the Clock Generator Troubleshooting Tree.

3. Disconnect all equipment from the 3585B HP-IB connector. Set the 3585 for:

   SHIFT 6 1 3
   PRESET
   CENTER FREQUENCY (starts test)

   Test mode 13 contains and repeats ten subtests which test the HP-IB interface on the I/O (A83) board. If a failure occurs, the subtest number is noted on the display and the failing subtest is repeated indefinitely. Press the INST PRESET key to stop the test.

   The following table describes the function of the subtests and the probable cause of failure.

| Subtest | Description | Action |
|---|---|---|
| 1 | Writes/reads to shift register A83 U105. | Data related problem (ex. stuck bit). Suspect A83 U105 for single bit failures. If more than one bit also check U105 inputs for gating pulses with a logic probe. |
| 2 | Writes data to shift register, shifts once and reads result. | Shift gating problem Suspect U105 or U104 |
| 3 | Writes data to shift register, shifts 11 times, writes to U105, shifts more & reads result which should equal the written data. | Opto-isolators or something in the shift path is faulty Suspect U100, U109-U112, U114 or U115. |
| 4 | Puts A83 U116 into talk only mode & writes to its output register then reads it back. | Read/write gating problems to U116 or U118. Suspect U115, U116 or U118 |
| 5-10 | Tests the interrupt path. | Suspect U110 or U112 If good, check U110 pin 8 and A82 U106 pin 24 for pulses with a logic probe while test mode 13 is running. A82 U106 may also be suspect. |

4. If Test Mode 13 did not indicate a failure, set the 3585 for:

   SHIFT 6 1 4
   PRESET
   CENTER FREQUENCY (starts test).

   Test Mode 14 helps to verify the continuity of the HP-IB bus signals. Pins 1-9, 11 and 13-17 on the bus connector (or a cable connected to it) may be shorted to ground one-at-a-time.

   Does the display show the correct pin each time? If not, then suspect the cable, the HP-IB connector, A83 U117 or U118.

5. If these methods have not resolved the problem, then suspect buffer A83 U117 or other devices in your system.

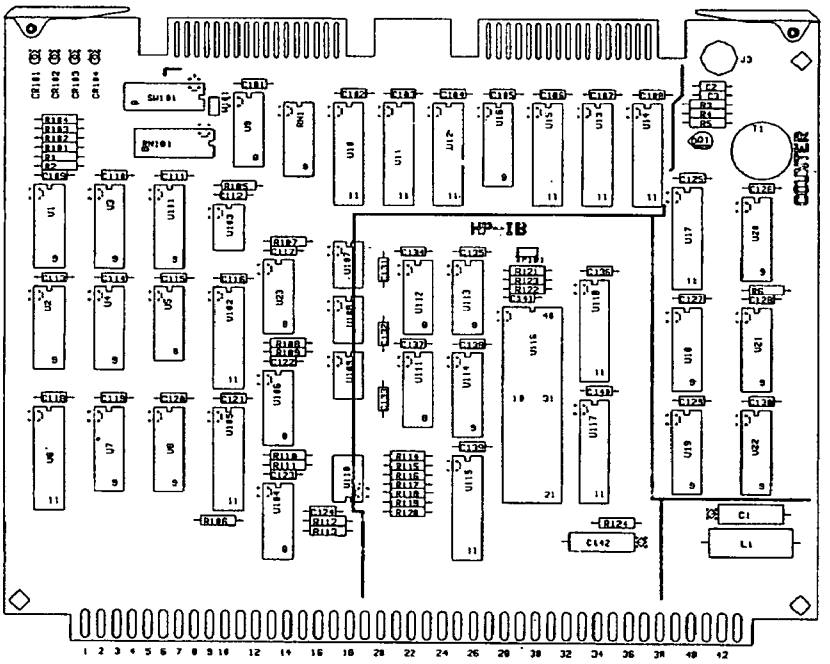


A83
03585-66583

# SERVICE GROUP G

# POWER SUPPLIES

## Board Numbers A70-75,89

## Part Numbers 03585-66570 thru 03585-66575, 03585-66589

### INDEX:



### ADJUSTMENTS:

| Component | Adjusted Parameter | Paragraph Location |
|---|---|---|
| A72R19 | 5V Power Supply Current Limit | 5-6 |
| A72R31 | 5V Power Supply Voltage Adjustment | 5-6 |
| A75R9 | 18V Reference | 5-6 |
| A75R15 | 10kHz Power Supply Clock Frequency | 5-6 |

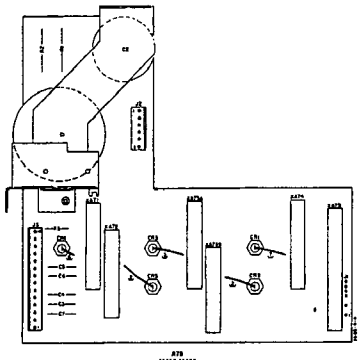

A79
03585-66579

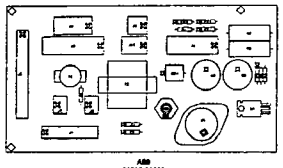

A80
03585-66580

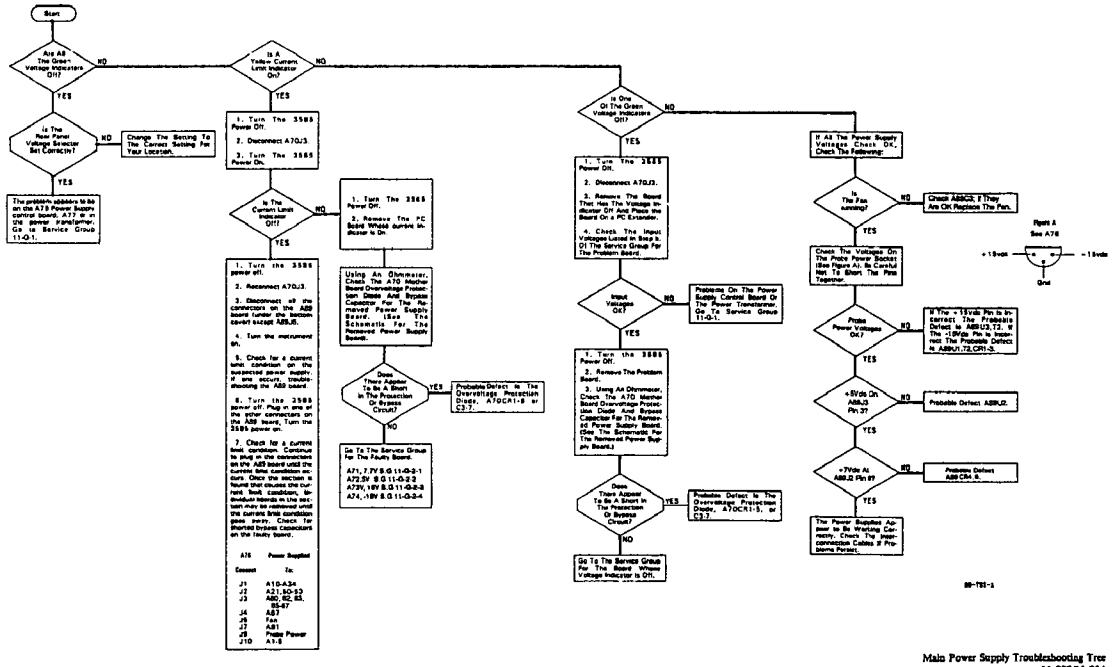


Main Power Supply Troubleshooting Tree

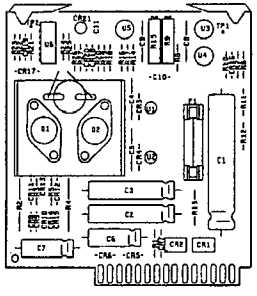


A75
03585-66878

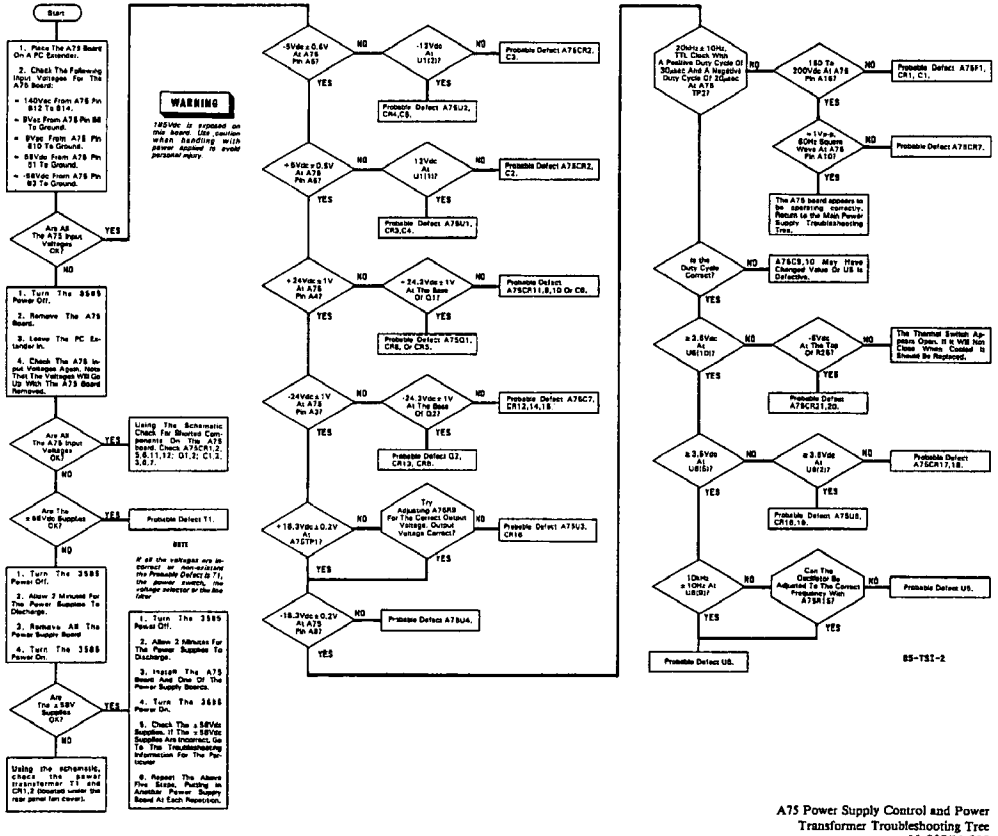


A75 Power Supply Control and Power Transformer Troubleshooting Tree
11-285/11-286

# SERVICE GROUP 11-G-2-1
# +7.7V POWER SUPPLY

## Board No. A71
## Part Number 03585-66571

a. Turn the 3585's power off.
Place the A71 board on a PC extender.
Disconnect A70J3.

b. If you have not already checked the inputs to this board check them against the following list. An absence of any of these signals indicates problems on the A75 board (Service Group G-1).

| XA71 Pin | dc Voltage |
|---|---|
| A1 | +24V |
| A2 | + 5V |
| A3 | 20kHz TTL Clock |
| A5 | +18V |
| A10 | +50V* |
| B1 | −24V |
| B2 | − 5V |

* ≈ 64V when A70J3 is disconnected.

c. Check the continuity of the fuse, F1.

d. In order to check the operation of the switching supply the switching hybrid, U1 must be removed. This device is socketed and may be removed by unscrewing the two screws holding it down, then gently pulling on the device.

e. Connect 1/4 Watt, 100(ohm) resistor (HP Part Number 0683-1015) from the cathode of CR2 to the positive side of C1.

f. Turn the 3585 power on.

g. Using an ac coupled oscilloscope check for a 2.5Vp-p square wave at the cathode of CR2.

1. If the 2.5Vp-p square wave is present, continue with step h.

2. If the 2.5Vp-p signal is not present, the Probable Defect is U4, Q1, Q2 or CR2.** Use the schematic to track the signal loss down.

h. Connect variable supply to A71TP1.

**If the stated devices check good, the problem is in the current limit circuitry. Continue with the troubleshooting procedure at step k to locate the problem.

i. Turn on the variable power supply and adjust it for 7.5V. The green LED should now be on.

   1. If the LED is on, continue at step j.

   2. If the LED is off or the power supply cannot be adjused to 7.5V, the Probable Defect is the output capacitor C3, the reverse voltage protection diode CR4 or the overvoltage clamping diode A70CR4. Other possibilities are A71C2, A70C5, and A71CR3.

j. Increase the voltage of the variable power supply by approximately one volt. Note the effect increase on the oscilloscope waveform as the voltage is increased (cathode of CR2).

   1. If the negative portion of the oscilloscope waveform gets narrower, continue with step l.

   2. If there is no change in the oscilloscope waveform, go to step k.

k. Check for ≈2Vp-p riding on 24Vdc at U2(6).

   1. If the signal is present, the Probable Defect is U2.

   2. If no square wave is present the Probable Defect is Q4,U3,4,15. check for a TTL low at U5(6) and a TTL high at U5(1).

l. Turn off the variable power supply. Adjust the voltage control for zero volts.

m. Connect the variable power supply's negative lead to TP1 and the positive lead through a 10k(ohm), 1.4 Watt resistor (HP Part Number 0683-1035) to U3(3)

n. Turn on the variable power supply. Slowly vary the voltage until the oscilloscope waveform goes to a positive level (dc level, no square wave), the yellow LED should now be on.

   1. If the LED lights and the square wave changes to dc, go to step o.

   2. If either condition does not occur, the Probable Defect is U3,4,5,CR5.

o. Turn off the variable power suppy and the 3585.

p. Remove the A71 board from the PC extender. Discharge C1 by shorting across it.

**CAUTION**

*Failure to discharge the aforementioned capacitor will destroy the new part you are about to put in.*

q. Install a new U1 switching hybrid if everything has checked good to this point. Replace the board in the card nest.

r. Turn on the 3585 power. The five green LED's on the power supplies should now be lit.

s. Reconnect A70J3 and replace the PC hold-down bar and plastic cover for the power supplies.

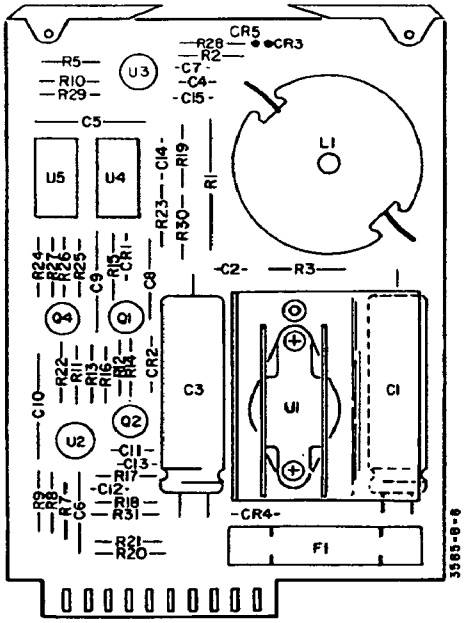


A71
03585-68571

# SERVICE GROUP 11-G-2-2

# +5V POWER SUPPLY

## Board No. A72
## Part Number 03585-66572

a. Turn the 3585's power off.
Place the A72 board on a PC extender.
Disconnect A70J3.

b. If you have not already checked the inputs to this board check them against the following list. An absence of any of these signals indicates problems on the A75 board (Service Group G-1).

| XA72 Pin | Voltage |
|---|---|
| A1 | +24V |
| A2 | + 5V |
| A3 | 20kHz TTL Clock |
| B1 | −24V |
| B20 | − 5V* |
| B4 | +18V ref |
| B10 | +50V* |

* ≈ 64V when A70J3 is disconnected.

c. Check the continuity of the fuse, F1.

d. In order to check the operation of the switching supply the switching hybrid, U5 must be removed. This device is socketed and may be removed by unscrewing the two screws holding it down, then gently pulling on the device.

e. Connect 1/4 Watt, 100Ω resistor ( HP Part Number 0683-1015) from the cathode of CR1 to the positive side of C1.

f. Turn the 3585 power on.

g. Using an ac coupled oscilloscope check for a 2.5Vp-p square wave at the cathode of CR1.

1. If the 2.5Vp-p square wave is present, continue with step h.

2. If the 2.5Vp-p signal is not present, the Probable Defect is Q3, Q5, U3, or CR1.** Use the schematic to track the signal loss down.

h. Connect variable supply to A72TP1.

**If the stated devices check good, the problem is in the current limit circuitry. Continue with the troubleshooting procedure at step k to locate the problem.

i. Turn on the variable power supply and adjust it for 5.0V. The green LED should now be on.

   1. If the LED is on, continue at step j.

   2. If the LED is off or the power supply cannot be adjused to 5V, the Probable Defect is the output capacitor C3, the reverse voltage protection diode CR4 or the overvoltage clamping diode A70CR5. Other possibilities are A72C2, A70C6 and A72CR3.

j. Increase the voltage of the variable power supply by approximately one volt. Note the effect on the oscilloscope waveform as the voltage is increased (cathode of CR1).

   1. If the negative portion of the oscilloscope waveform gets narrower, continue with step l.

   2. If there is no change in the oscilloscope waveform, go to step k.

k. Check for ≈2Vp-p riding on 24Vdc at U2(6).

   1. If the signal is present, the Probable Defect is U1.

   2. If no square wave is present the Probable Defect is Q4,U3,4,15. check for a TTL low at U4(6) and a TTL high at U4(1).

l. Turn off the variable power supply. Adjust the voltage control for zero volts.

m. Connect the variable power supply's negative lead to TP1 and the positive lead to a 10kΩ, 1/4 Watt resistor (HP- Part Number 0683-1035) to U2(3).

n. Turn on the variable power supply. Slowly vary the voltage (do not exceed +5V) until the oscilloscope waveform goes to a positive level (dc level, no square wave), the yellow LED should now be on.

   1. If the LED lights and the square wave changes to dc, go to step o.

   2. If either condition does not occur, the Probable Defect is U2,3,4,CR6.

o. Turn off the variable power suppy and the 3585.

p. Remove the A72 board from the PC extender. Discharge C1 by shorting across it.

**CAUTION**

*Failure to discharge the aforementioned capacitor will destroy the new part you are about to put in.*

q. Install a new U5 switching hybrid if everything has checked good to this point. Replace the board in the card nest.

r. Turn on the 3585 power. The five green LED's on the power supplies should now be lit.

s. Reconnect A76J6 and replace the PC hold-down bar and plastic cover for the power supplies.

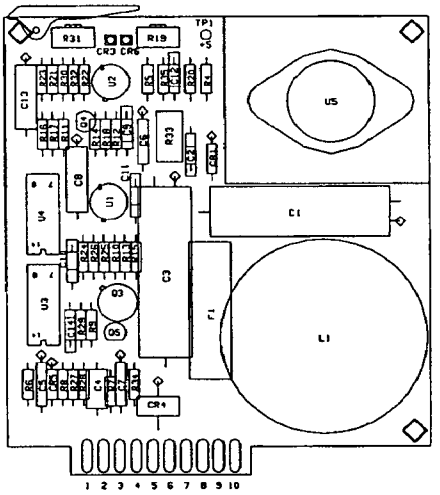


A72
03585-86572

# SERVICE GROUP 11-G-2-3
# +18V POWER SUPPLY

**Board No. A73b**
**Part Number 03585-66573**

a. Turn the 3585's power off.
Place the A73 board on a PC extender.

b. If you have not already checked the inputs to this board check them against the following list. An absence of any of these signals indicates problems on the A75 board (Service Group G-1).

| XA73b Pin | Voltage |
|---|---|
| A1 | +24V |
| A2 | + 5V |
| A3 | 20kHz TTL Clock |
| A10 | +50V* |
| B1 | −24V |
| B2 | − 5V |
| B5 | +18V ref |

* ≈ 64V when A70J3 is disconnected.

c. Check the continuity of the fuse, F1.

d. In order to check the operation of the switching supply the switching hybrid, U1 must be removed. This device must be unsoldered and removed by unscrewing the two screws holding it down, then gently pulling on the device.

e. Connect 1/4 Watt, 100Ω resistor (HP Part Number 0683-1015) from the cathode of CR2 to the positive side of C1.

f. Turn the 3585 power on.

g. Using an ac coupled oscilloscope check for a 2.5Vp-p square wave at the cathode of CR2.

1. If the 2.5Vp-p square wave is present, continue with step h.

2. If the 2.5Vp-p signal is not present, the Probable Defect is U4, Q1, Q2 or CR2.** Use the schematic to track the signal loss down.

h. Connect variable supply to A73TP1.

**If the stated devices check good, the problem is in the current limit circuitry. Continue with the troubleshooting procedure at step k to locate the problem.

i. Turn on the variable power supply and adjust it for +18.0V. The green LED should now be on.

   1. If the LED is on, continue at step j.

   2. If the LED is off or the power supply cannot be adjused to +18V, the Probable Defect is the output capacitor C3, the reverse voltage protection diode CR4 or the overvoltage clamping diode A70CR2. Other possibilities are A73bC2, A70C3, and A73CR3.

j. Increase the voltage of the variable power supply by approximately one volt. Note the effect on the oscilloscope waveform as the voltage is increased (cathode of CR2).

   1. If the negative portion of the oscilloscope waveform gets narrower, continue with step l.

   2. If there is no change in the oscilloscope waveform, go to step k.

k. Check for ≈2Vp-p riding on 24Vdc at U2(6).

   1. If the signal is present, the Probable Defect is U2.

   2. If no square wave is present the Probable Defect is Q4,U3,4,5. check for a TTL low at U5(6) and a TTL high at U5(1).

l. Turn off the variable power supply. Adjust the voltage control for zero volts.

m. Connect the variable power supply's negative lead to TP1 and the positive lead to a 10kΩ, 1/4 Watt resistor (HP Part Number 0683-1035) to U3(3).

n. Turn on the variable power supply. Slowly vary the voltage (do not exceed +5V) until the oscilloscope waveform goes to a positive level (dc level, no square wave), the yellow LED should now be on.

   1. If the LED lights and the square wave changes to dc, go to step o.

   2. If either condition does not occur, the Probable Defect is U3,4,5,CR5.

o. Turn off the variable power suppy and the 3585.

p. Remove the A73b board from the PC extender. Discharge C1 by shorting across it.

**CAUTION**

*Failure to discharge the aforementioned capacitor will destroy the new part you are about to put in.*

q. Install a new U1 switching hybrid if everything has checked good to this point. Replace the board in the card nest.

r. Turn on the 3585 power. The five green LED's on the power supplies should now be lit.

s. Reconnect A76J6 and replace the PC hold-down bar and plastic cover for the power supplies.

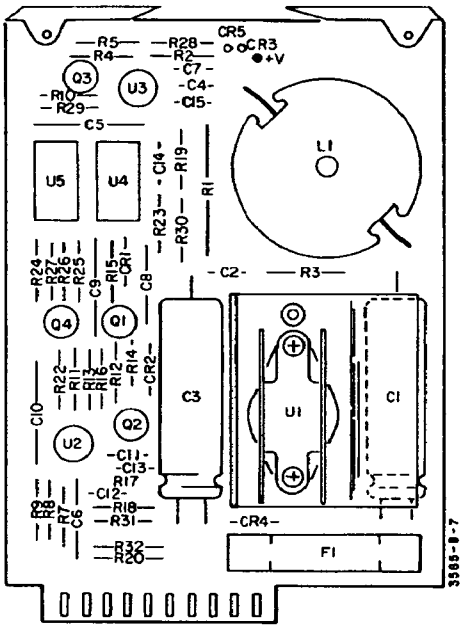


A73
03585-66573

# SERVICE GROUP 11-G-2-4

# −18V POWER SUPPLY

## Board No. A74

## Part Number 03585-66574

a. Turn the 3585's power off.
Place the A74 board on a PC extender.

b. If you have not already checked the inputs to this board check them against the following list. An absence of any of these signals indicates problems on the A75 board (Service Group G-1).

| XA74 Pin | Voltage |
|---|---|
| A1 | +24V |
| A2 | + 5V |
| A3 | 20kHz TTL Clock |
| A5 | −18V ref |
| A 9 | −50V* |
| B1 | −24V |
| B2 | − 5V |

*≈ −64V when A70J3 is disconnected.

c. Check the continuity of the fuse, F1.

d. In order to check the operation of the switching supply the switching hybrid, U5 must be removed. This device must be unsoldered and removed by unscrewing the two screws holding it down, then gently pulling on the device.

e. Connect 1/4 Watt, 100Ω resistor (HP Part Number 0683-1015) from the anode of CR3 to the negative side of C12.

f. Turn the 3585 power on.

g. Using an ac coupled oscilloscope check for a 2.5Vp-p square wave at the anode of CR3.

   1. If the 2.5Vp-p square wave is present, continue with step h.

   2. If the 2.5Vp-p signal is not present, the Probable Defect is U1, Q2, Q3 or CR3.** Use the schematic to track the signal loss down.

h. Connect variable supply to A74TP1.

**If the stated devices check good, the problem is in the current limit circuitry. Continue with the troubleshooting procedure at step k to locate the problem.

i. Turn on the variable power supply and adjust it for −18.0V. The green LED should now be on.

   1. If the LED is on, continue at step j.

   2. If the LED is off or the power supply cannot be adjused to +18V, the Probable Defect is the output capacitor C14, the reverse voltage protection diode CR5 or the overvoltage clamping diode A70CR1. Other possibilities are A74C13, A70C7, and A74CR4.

j. Increase the voltage of the variable power supply by approximately one volt. Note the effect on the oscilloscope waveform as the voltage is increased (anode of CR3).

   1. If the negative portion of the oscilloscope waveform gets narrower, continue with step l.

   2. If there is no change in the oscilloscope waveform, go to step k.

k. Check for ≈2Vp-p riding on 24Vdc at U3(6).

   1. If the signal is present, the Probable Defect is U3.

   2. If no square wave is present the Probable Defect is Q1,U1,2,4. check for a TTL low at U2(6) and a TTL high at U2(1).

l. Turn off the variable power supply. Adjust the voltage control for zero volts.

m. Connect the variable power supply's positive lead to TP1 and the negative lead to a 10kΩ, 1/4 Watt resistor (HP Part Number 0683-1035) U4(2).

n. Turn on the variable power supply. Slowly vary the voltage until the oscilloscope waveform goes to a positive level (dc level, no square wave), the yellow LED should now be on.

   1. If the LED lights and the square wave changes to dc, go to step o.

   2. If either condition does not occur, the Probable Defect is U1,2,4,CR1

o. Turn off the variable power suppy and the 3585.

p. Remove the A74 board from the PC extender. Discharge C12 by shorting across it.

**CAUTION**

*Failure to discharge the aforementioned capacitor will destroy the new part you are about to put in.*

q. Install a new U1 switching hybrid if everything has checked good to this point. Replace the board in the card nest.

r. Turn on the 3585 power. The five green LED's on the power supplies should now be lit.

s. Reconnect A76J6 and replace the PC hold-down bar and plastic cover for the power supplies.

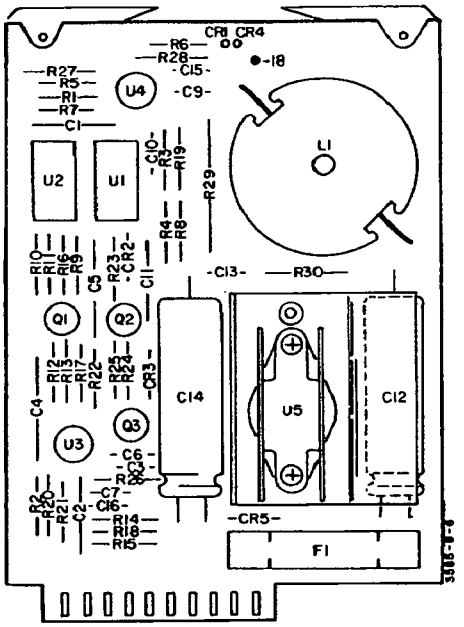


A74
03585-66574

# SERVICE GROUP H
# DISTORTION AND SPURS

The purpose of this section is to give you some guidelines to solve those problems which are related to either Distortion or Spurs. This section should not be used until after using the Preliminary Troubleshooting Procedure to check for other problems. Unless the instrument is operating correctly in all other respects, it is very difficult to isolate a problem related to Distortion or Spurs.

This section is broken up into two basic sections:

Section 1 — This section deals with the various types of distortion (i.e. Harmonic, IF and IM) and noise on both the High Impedance and Terminated channels.

Section 2 — This section primarily deals with Fractional N Spurs and their causes. Further guidelines are given on Conversion/Input and Reference Spurs.

# SECTION I
# HARMONIC DISTORTION

Getting Started —

Distortion is almost invariably related to the Input/Conversion section; however, it is very important to determine that the distortion is being caused by the 3585 rather than the source connected to it. To confirm the source of the distortion, use the following procedure:

1. Input a signal to the 3585 whose amplitude is equal to the range (preferably 0dBm).
2. Adjust the source frequency until it is the same as the frequency where the distortion occured.

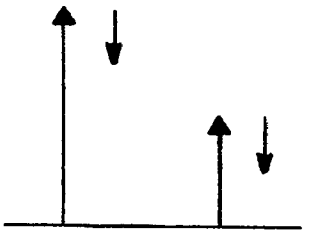

3. Make a relative amplitude measurement between the fundamental and the second harmonic using the Offset Function.

4. "Zoom-in" on the second or third harmonic of the trace.

5. Deactivate the Ref Lvl Trk, Decrement the RANGE one step.

   a. If the relative amplitude of the distortion product does not change significantly when the Range is incremented, the distortion is due to the source rather than the 3585.

   b. If the relative amplitude of the distortion product increases by ≈ 5dB then the distortion is due to the 3585.

**NOTE**

*A more detailed discussion of distortion measurement techniques is contained in Section III, Chapter 2 under "Improving The Noise-Free and Distortion-Free Dynamic Range".*

If the distortion is being caused by the 3585 and the distortion is < 80dB below signal then the following hints should help you locate the problem.

Always check:

- The base-to-emitter voltage on A1Q24,25. When these devices fail the output voltage only drops about 1V (to ± 11V), but cause a variety of problems.
- The levels of the Local Oscillator, 90MHz input and 10MHz input. If these levels are > 5dB lower than the stated value, Harmonic Distortion may be the result.
- The screws holding down the A1-5 boards are tight as well as those holding the shielding to the Input/Conversion casting.

## IM DISTORTION

Check:

- The base-to-emitter voltage on A1Q24,25. When these device fail the output voltage only drops about 1V (to ± 11V) which is enough to cause IM distortion.
- A1Q6 for 1MΩ IM Distortion problems. Also check that A1C52 is spaced approximately 1/8" off of the PC board.

## NOISE

**1/F Noise, Low Frequency** — Remove the jumper connected to A1J4. Connect a 50Ω resistor between A2J3 and ground. Again check for 1/F noise, if it persists the probable defect is A2CR1. If the 1/F noise problem goes away then replace the jumper between A1 and A2. Ground the negative side of C93. If the 1/F noise returns, replace components within the A1 output amp, A1Q16,U6. Otherwise replace A1Q13,11.

**1MΩ Input Noise** — Probable due to the 1MΩ Input Buffer, particularly A1CR8,9,Q6.

**Noise vs. Bandwidth** — Using the Bandwidth and frequency at which the errors are occuring, follow the same elimination procedure outlined in the 1/F noise procedure.

| Frequency Range Of Fundamental When Distortion Occurs | Symptom | Probable Defect |
|---|---|---|
| ≈2.6kHz | bad third harmonic | A5 or A17. Check the output of A5 with a Spectrum Analyzer to determine where distortion is occuring. Probable defect on A5 is Q1, U1 or T4. Probable defect on A17 is Q1-3,7,8 or L6. |
| ≈70kHz - 2MHz | bad second and third harmonic | A2L11 may need to be adjusted. |
| ≈70kHz - 2MHz | good second, bad third harmonic | A4CR1. The distortion is caused within the mixer itself. |
| All frequencies | bad second harmonic | A1 or A2. Check the output of A1 using a Spectrum Analyzer to confirm the problem area. Probable defect on A1 is Q16,11. Probable defect on A2 is CR1 or U1. |
| | 1MΩ input distortion | If the distortion is unique to the 1MΩ input the problem lies in the 1MΩ Buffer Amp (A1CR8,9,Q6). |
| | Underdriving by 5dB causes the distortion to go away | If the distortion changes by a factor considerable greater then the power law (5dB for 2nd harmonic, 10dB for third)the problem may be in the Autorange input amp, A1U7. |

# SECTION II
# SPURIOUS RESPONSES

**NOTE**

*Covers on the A21-33 board must be screwed down tight to eliminate spurs in the 60-80db below signal region.*

Getting Started —

It is important to discover the cause of the spurious response. Two basic areas cause spurs: the Fractional N Synthesizer or the remainder of the Local Oscillator. Generally, spurs caused by the Fractional N Synthesizer will be within 200kHz of the input frequency and cause a response similar to Figure 11-H-1.This type of a response is usually very apparent in the 10kHz Res. BW; however, when the Res. BW is changed to 3kHz the spurious responses all but disappear. If this is your symptom then continue with the Fractional N Spur Troubleshooting procedure.

If the spurious response you are experiencing is a discrete response which is not similar to Figure11-H-1,the problem is in the rest of the Local Oscillator. The most productive way to analyze this type of problem is to study the symptoms.

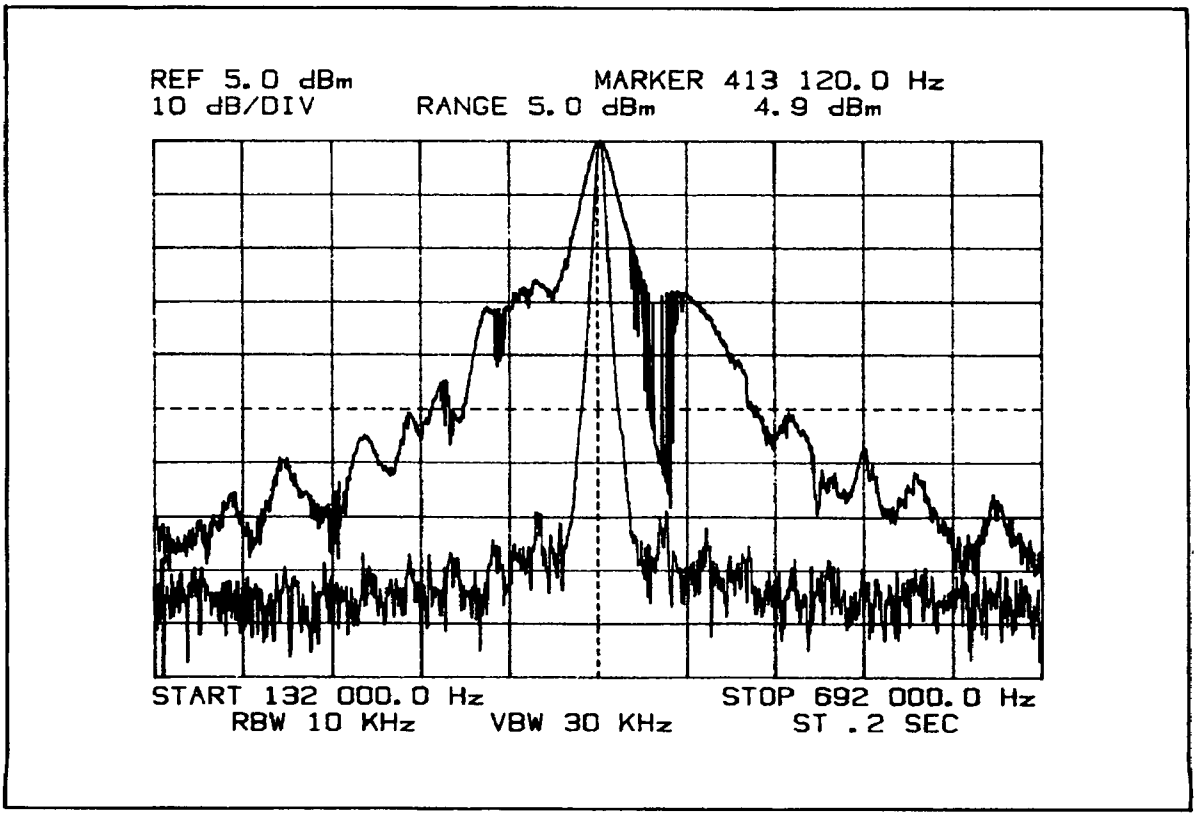


**Figure 11-H-1. Fractional N Spurs In 10kHz RBW**

- If the spurious response is always 2 to 3MHz above the input signal then begin to look for a problem in the Step Loop, particularly the A26 board.

- If the spurious response is always 700kHz below the input signal, the A5 board is probably causing the response. Usually this response is caused by a mistuned 9.65MHz notch filter.

- If the spurious response is always 20.7MHz below the input signal, the most likely cause is a mistuning of the 79.65MHz Image filter on the A3 board. If the problem cannot be solved by adjustment, troubleshoot the A4 board with a spectrum analyzer.

- If the spurious response is always 175kHz below the input signal, the most likely cause is the third mixer on the A5 board (A4U1).

- If the spurious response is at a constant frequency try to analyze the frequency in terms of the reference frequencies used in the instrument. The probable defect is an open capacitor on the A21 board.

## FRACTIONAL N SPUR TROUBLESHOOTING PROCEDURE

a. Set the 3585 to Test Mode 01 using the A83 test switches.

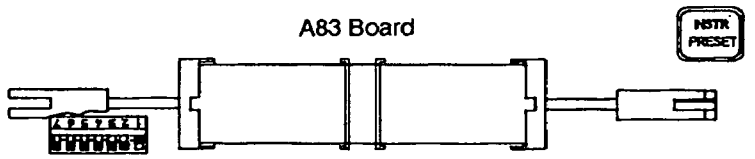


b. Enter:

Instrument Preset
("Inst. Test Mode 01" should appear on the CRT)
Manual Entry.....450kHz
Res. BW.....10kHz

c. Connect a 10:1 oscilloscope probe to A31TP2.
Set the oscilloscope controls for:

Vertical.....0.01V/Div (ac coupled)
Horizontal.....50μsec/Div

d. This is a cardinal frequency for the Fractional N. The API's are inactive at this time. Note the value of the oscilloscope waveform (normal operation gives a value <0.5Vp-p).

e. Enter:

Manual Entry.....450.004kHz

f. This is a non-cardinal frequency at which all the API's are operating. Note the value of the oscilloscope waveform.

1. If the values noted in steps d and f are approximately equal and <0.5Vp-p then the Fractional N is probably not producing the spurs.

2. If the non-cardinal frequency measurement (step f) is significantly worse then the cardinal frequency measurement (step d), then go to step g.

3. If both step d and f meaure >0.5Vp-p and are approximately the same amplitude the probable defect is A32Q32,Q34,Q6,Q7,C9,C13,C14.

g. Before checking the API's, it is important that we check for correct operation of the "pulse swallow" circuitry. Connect the oscilloscope to A33TP1.

h. Set the oscilloscope controls for:

Vertical.....0.2V/Div (dc coupled)
Horizontal.....10μsec/Div

i. Enter:

Manual Entry.....449.999kHz

Approximately 4V peak pulses should now be occuring at a 100kHz rate. If the pulses are not occuring at a 100kHz rate, go to Service Group B-4 and troubleshoot the A33 board.

j. Enter:

Manual Entry.....450kHz

There should be no pulses occuring at A33TP1. Again, go the Service B-4 if pulses are occuring.

k. The problem is most likely occuring in the A32 board API's. To determine which API is causing the problem, monitor A31TP2 with the oscilloscope. Watch the oscilloscope while entering each of the frequencies listed below. These frequencies add each API in succession. The point at which the waveform at A31TP2 gets significantly worse indicates which API is faulty. Check step l for furth instructions.

| Manual Frequency | Active API |
|---|---|
| 450kHz | none |
| 490kHz | API 1 |
| 454kHz | API 2 |
| 450.4kHz | API 3 |
| 450.04kHz | API 4 |
| 450.004kHz | API 5 |

l. Enter:

Manual Entry.....450.004kHz

Check for pulses of varying width (10 discrete steps) at A32U1(4,14,13,11,6). You need only check the line associated with the faulty API.

m. Check for pulses of varying width at A32U1(5,15,12,10,7).

n. Check the base-to-emitter voltage drops of Q8,9 and 11. If everything has checked good to this point, other possibilities are A32,U2,U3,Q7,Q32,Q34,C13,C14,C9, Q6.